Printing for Fun and Profit Under AIX V4

Document Number GG24-3570-01

December 1994

International Technical Support Organization
Austin Center

Note!

Before using this information and the product it supports, be sure to read the general information under “Special Notices” on page xv.

Second Edition (December 1994)

This edition applies to V4.1 of Advanced Interactive Executive (AIX) for the RISC System/6000 Program Number 5765-393.

Order publications through your IBM representative or the IBM branch office serving your locality. Publications are not stocked at the address given below.

An ITSO Technical Bulletin Evaluation Form for reader's feedback appears facing Chapter 1. If the form has been removed, comments may be addressed to:

IBM Corporation, International Technical Support Organization
Dept. 948S 821
11400 Burnet Road
Austin, Texas 79758

When you send information to IBM, you grant IBM a non-exclusive right to use or distribute the information in any way it believes appropriate without incurring any obligation to you.

© **Copyright International Business Machines Corporation 1991, 1994. All rights reserved.**
Note to U.S. Government Users — Documentation related to restricted rights — Use, duplication or disclosure is subject to restrictions set forth in GSA ADP Schedule Contract with IBM Corp.

Abstract

An important function of modern computing environments is the capability to output information on paper, or print. This document focuses on the printing facilities available in AIX V4 for the RISC System/6000 (5765-393). Many of these facilities are new or unique to AIX V4.1. This document is aimed at helping people, such as systems managers, systems engineers, or integrators to understand:

- The manner in which AIX V4.1 print spooling subsystem functions
- How to install printers
- How to configure printers and the print spooling subsystem
- How to print files and manage the progress of print requests through print spooling subsystem
- More advanced printing topics such as remote printing, printing via terminals, printing via IBM Xstations, and configuring nonsupported printers.

(258 pages)

© Copyright IBM Corp. 1991, 1994

Contents

Abstract . . . iii

Special Notices . . . xv

Preface . . . xvii

Related Publications . . . xix
International Technical Support Center Publications . . . xix

Acknowledgements . . . xxi

Chapter 1. Introduction . . . 1
1.1 A Technical Overview of Printing under AIX V4.1 . . . 4
1.1.1 Two Approaches to Printing . . . 4
1.1.2 Printing via the Printer Device Driver . . . 5
1.1.3 Printing via the Print Spooling Subsystem . . . 6
1.1.4 The piobe Process . . . 10
1.1.5 The rembak Process . . . 10
1.2 A Technical Overview of Print Services Facility/6000 . . . 11
1.2.1 How PSF/6000 Functions . . . 12
1.3 A Technical Overview of Palladium . . . 14
1.3.1 Understanding Client-Server Printing . . . 14
1.3.2 Understanding Distributed Computing Environment . . . 15
1.3.3 What are the Key Characteristics of Palladium? . . . 15

Chapter 2. Installing a Printer . . . 17
2.1.1 Installing the Physical Printer . . . 17
2.1.2 Adding a Print Queue . . . 18
2.1.3 Verifying Printer Output Characters with lptest . . . 25
2.1.4 Using the CDE Installation Assistant . . . 27

Chapter 3. Printing Files . . . 31
3.1.1 Sending Print Requests to a Print Queue . . . 31
3.1.2 Listing Print Requests Within a Print Queue . . . 35
3.1.3 Holding and Releasing Jobs . . . 39
3.1.4 Moving Jobs between Queues . . . 40
3.1.5 Prioritizing Jobs in a Print Queue . . . 41
3.1.6 Canceling Jobs in a Print Queue . . . 43
3.1.7 The enq Command . . . 44
3.1.8 The qprt Command . . . 44

Chapter 4. Further Print Spooling Subsystem Configuration . . . 45
4.1 A Technical Overview of Print Queues and Queue Devices . . . 45
4.1.1 The qconfig File . . . 45
4.1.2 Administrative Privilege and the Print Spooling Subsystem . . . 50
4.2 Configuring and Managing Print Queues . . . 51
4.2.1 Adding a Print Queue . . . 52
4.2.2 Displaying Print Queue Configuration Information . . . 55
4.2.3 Modifying a Print Queue Configuration . . . 56
4.2.4 Stopping and Starting a Print Queue . . . 59

© Copyright IBM Corp. 1991, 1994

4.2.5 Removing a Print Queue - the rmque Command 60
4.3 Configuring and Managing Print Queue Devices 61
4.3.1 Adding a Queue Device 61
4.3.2 Displaying a Queue Device Configuration Information 65
4.3.3 Modifying a Queue Device 66
4.3.4 Removing a Queue Device 67
4.4 Configuring and Managing Printer Devices 68
4.4.1 Displaying Printer Device Settings 68
4.4.2 Temporarily Changing Printer Device Device Settings 70
4.4.3 Permanently Changing Printer Device Settings 71
4.4.4 Moving a Printer to Another Port 71
4.4.5 Removing a Printer Device 71
4.5 Configuring and Managing Virtual Printers 71
4.5.1 Add a Virtual Printer 74
4.5.2 Change/Show the Attributes of a Virtual Printer 75
4.5.3 Remove a Virtual Printer 77

Chapter 5. Advanced Printing Topics 79
5.1 Printing via an ASCII Terminal Attached Printer 79
5.1.1 Configuring an ASCII Terminal Attached Printer 79
5.1.2 Testing your Printer 83
5.2 Configuring Nonsupported Printers 86
5.2.2 Pass-Through Mode Printing 87
5.2.3 Configuring Nonsupported Printers - An Example 87
5.2.4 Customizing Nonsupported Virtual Printers 88
5.2.5 Adding a Printer that Emulates a Proprinter (Mannesman Tally 87) . 91
5.3 Printing via an IBM Xstation 92
5.3.1 Configuring an IBM Xstation Connected Printer 92
5.4 PostScript Printing - Some Differences 98
5.4.1 PostScript and AIX V4.1 98
5.5 Using the Print Spooling Subsystem as a Generic Spooling Subsystem . 99
5.6 Customizing Header and Trailer Pages 102
5.7 Printer and Plotter Tips and Hints 104
5.7.1 Printer Specific Information 104
5.7.2 Suppliers of Cables 105
5.7.3 Printer Troubleshooting 105
5.7.4 Using Messages to a Printer Operator 106
5.7.5 Messages from the Print Spooling Subsystem 107
5.7.6 6150 Client to RISC System/6000 Server 108
5.7.7 Printing the Contents of an X-Window 108

Chapter 6. Network Printing Options 111
6.1.1 An Overview of Remote Printing 111
6.1.2 Controlling the lpd Daemon 116
6.1.3 Using and Managing Remote Printers 120
6.2 IBM 4033 LAN Connection 131
6.2.1 IBM 4033 Description 131
6.2.2 Installing a 4033-Attached Printer 132
6.2.3 Installing the 4033 AIX Utility 132
6.2.4 Running the 4033 AIX Utility 133
6.3 IBM LaserPrinter Integrated Network Option 139
6.3.1 Internal Network Adapters for AIX V.4.1 139
6.3.2 How the Internal Network Adapter Work 140
6.3.3 Installing the INA-Attached Printer 140

6.4 Hewllet Packard JetDirect Card 143
6.4.1 External JetDirect Card 143
6.4.2 Integrated JetDirect Card 146
6.5 IBM 7318 Serial Communication Network Server 146
6.5.1 Configuring the 7318 Model P10 147
6.5.2 Configuring a Parallel Printer 149
6.6 IBM 3930-03D and 03S Printer 152

Chapter 7. Print Services Facility/6000 153
7.1 Description of PSF/6000 153
7.1.1 The Advanced Function Presentation 153
7.1.2 Supported Input and Output Data Streams 154
7.1.3 PSF/6000 Resources 155
7.1.4 PSF/6000 Environments 156
7.2 Printer Installation and Configuration for PSF/6000 156
7.3 AIX-Defined Printers Installation and Configuration 157
7.3.1 Installing a AIX-Defined Printer 157
7.3.2 Configuring a Virtual Printer, Print Queue, and Queue Device. . . . 158
7.3.3 Adding a PSF/6000 Queue for PCL Output 159
7.4 Channel-Attached Printer Installation 160
7.4.1 Installing the S/370 Channel Emulator/A Adapter 161
7.4.2 Loading the S/370 Channel Emulator/A Device Driver 161
7.4.3 Configuring PSF/6000 for Channel-Attached Printer 162
7.4.4 Verifying the S/370 Channel Attachment 163
7.5 Installing an i-data 7913 IPDS Printer LAN Attachment 165
7.5.1 Understanding the Use of the i-data 7913 IPDS Printer LAN Attachment 165
7.5.2 Understanding How the i-data 7913 IPDS Printer LAN Attachment Fits into Network Configurations 165
7.5.3 Configuring the bootp Server 167
7.5.4 i-data 7913 Printer LAN Attachment and Printer Setup 169
7.5.5 Attaching the i-data 7913 Printer LAN Attachment 169
7.6 Configuring PSF/6000 for a TCP/IP-Attached Printer 170
7.7 PSF/6000 Printing 171
7.7.1 Printing from SMIT Panels 172
7.7.2 PSF/6000 Printing from the AIX Command Line 174
7.8 PSF/6000 Printing Management 178
7.8.1 Bringing a PSF/6000 Queue Up/Down 178
7.8.2 Bringing PSF/6000 Up/Down for a Print Queue 180
7.8.3 Removing a PSF/6000 queue 180
7.9 PSF/6000 Troubleshooting 181
7.10 Remote Printing From Client Systems (PSF/6000 Connectivity) 182
7.10.1 Printing From an AIX 4.1 Client 183
7.10.2 Updating the /etc/hosts File on the AIX 4.1 Client 186
7.10.3 Adding a Remote PSF/6000 Printer from an AIX 4.1 Client 186
7.10.4 Printing From a VM Client 189
7.10.5 Printing from a MVS Client 190
7.10.6 Printing from an MVS System Using -o Parameters 191
7.10.7 Printing from an AS/400 Client 192
7.10.8 Printing from a OS/2 2.11 Client 194
7.11 PSF/6000 PSF Direct Component 195

Appendix A. AIX Print Commands 197
A.1 Printer Configuration Files, Commands and Processes 197

A.2 Compatibility of the AIX V4.1 Print Spooling Subsystem 200

Appendix B. Supported AIX V4.1 Printers 203

Appendix C. SMIT Fastpaths for Printing 211

Appendix D. RISC System/6000 Printer Cabling 213
D.1 IBM Adapters and Cables 213
D.1.1 Native Serial Ports (S1 and S2) 213
D.1.2 IBM 8-Port Async Adapters 213
D.1.3 IBM 16-Port Async Adapters 214
D.1.4 IBM 128-Port Async Subsytem 214
D.2 Cable Pinout Diagrams 216
D.2.1 Cable (D) - EIA-232D Asynchronous Cable 216
D.2.2 Cable (K) - EIA-422A Asynchronous Cable 216
D.2.3 Cable (E) - Printer/Terminal Interposer EIA-232 217
D.2.4 Cable (N) - 64-Port Adapter to 16-port Concentrator 217
D.2.5 Cable (P) - RJ45 to DB25 Converter Cable 218
D.2.6 Cable (NB/NC) - 128-Port Asynchronous Controller Cable (8-wires) 218
D.2.7 Cable (ND) - 128-Port Asynchronous Controller Cable (4-wires) . . 219
D.2.8 Cable (NK) - 10-pin RJ45 to Db25 Converter Cable (9 inches) . . . 219
D.2.9 Cable (NL) - 10-pin RJ45 to Db25 Terminal/Printer Customer Supplied 219
D.2.10 Cable (NM) - 10-pin RJ45 to Db25 Modem Cable Customer Supplied 220

Appendix E. Virtual Printer Colon Files and Formatter 221
E.1 The Formatter 221
E.2 Virtual Printer Colon File Syntax 221
E.3 Generic Formatter 225
E.3.1 Compiling and Linking a Print Formatter 225
E.3.2 A Print Formatter Example Program 226

Appendix F. iptrace Diagnostic 229
F.1 How to Interpret the iptrace Command 229
F.2 Example Using the iptrace Command 230
F.3 Summary of iptrace Report 240

Appendix G. Data Streams 243
G.1 What is a Data Stream? 243
G.2 Most Popular Data Streams Description 244
G.2.1 Hewlett-Packard Printer Control Language (HP-PCL) 244
G.2.2 Proprinter Data Stream 245
G.2.3 PostScript Data Stream 245
G.3 Data Streams Supported by Print Services Facility/6000 246
G.4 Overview of Supported Data Streams for AIX and PSF/6000 247

Appendix H. Printing Tips 249
H.1 How does One Use a Single Queue for Both PostScript and ASCII? . . 249
H.2 How to Support any Native Typefont on the HP Laserjet III or IV (PCL)? 250
H.2.1 How to Change the mU Attribute? 251
H.3 How to Use the PCL5 Overlay Capability with the 4039 Virtual Printer? 252
H.3.1 Creating a File with the Overlay 252
H.3.2 Creating a Virtual Printer for Downloading the Overlay 253

H.4 How to Format Locally for Remote Printing? 254
H.4.1 A Solution for This Problem 254
H.5 The remout Backend 256

Index 257

Figures

1. Today's Printing Environment . . . 1
2. Printer Device Driver . . . 5
3. AIX V4.1 Virtual Printer Concept . . . 7
4. The Interactions of the AIX V4.1 Print Spooling Subsystem . . . 9
5. AIX and PSF/6000 Print Submission Flow . . . 13
6. Adding a Print Queue Menu - Parallel Printer . . . 24
7. Ripple Test Pattern to STDOUT (Partial Display) - Using lptest . . . 26
8. Add a Print Queue Menu - Serial Printer . . . 26
9. Installation Assistant Window . . . 27
10. Installation Assistant Information Window . . . 28
11. Installation Assistant Spool Manager Window . . . 29
12. The smit qprt Menu . . . 32
13. AIX V4.1 Printer Status Command Information . . . 35
14. AIX V4.1 qconfig File Relationships . . . 46
15. Default Queue Stanza for /etc/qconfig . . . 47
16. qconfig Stanza to Allow Two Printers to be Served by a Single Queue . 49
17. Possible Batch Queue Configuration . . . 49
18. Stanza to Allow Two Batch Job Streams . . . 50
19. Add a Print Queue Menu . . . 53
20. SMIT chque Screen . . . 58
21. Canceling All Jobs on a Queue - Using qadm . . . 59
22. Bringing Down Queues - Using qadm . . . 59
23. Bringing Up Queues - Using qadm . . . 60
24. Removing a Specified Queue - Using rmque . . . 60
25. Creating a Queue Device under AIX V4.1 . . . 62
26. Display Current Printer Settings for Printer lp0 Using splp . . . 68
27. Listing Current Attributes for Device lp0 Using lsattr . . . 69
28. Listing the Default Attributes for Device lp0 Using lsattr . . . 69
29. Listing Possible Attributes for a Printer Using lsattr . . . 70
30. Changing Printer Settings - Using splp . . . 70
31. The Virtual Printer Database . . . 72
32. Virtual Printer File Naming Convention for /usr/lpd/ddi . . . 73
33. Example of an Entry in the predef and custom Files . . . 73
34. Virtual Printer Viewed via chvirprt or lsvirprt . . . 74
35. An Example of a Shell Script to Use via the Spooler . . . 101
36. The Standard /usr/lib/lpd/pio/burst/H.ascii File . . . 102
37. Values of Variables in Burst Page Format Files . . . 103
38. Console Message Sent Using qprt -M . . . 107
39. Printing Output on 3812 . . . 109
40. An Overview of Remote Printing . . . 112
41. IBM 7318 Printing Scenario . . . 147
42. i-data 7913 Attachment Configuration 1 . . . 166
43. i-data 7913 Attachment Configuration 2 . . . 166
44. PSF/6000 Connectivity Diagram . . . 183
45. Overview of Supported Data Streams for AIX and PSF/6000 . . . 247

© Copyright IBM Corp. 1991, 1994

Tables

1. Printer Status Definitions 36
2. Key Queue Stanza Fields in the qconfig File 47
3. Field Name and Possible Values for qconfig Queue Device Stanzas . . . 48
4. User v. Systems Administrator Use of Print Management Functions . . . 51
5. Colon File Fields to Be Set to Null for MT-87 91
6. PostScript Printers Supported by AIX V4.1 99
7. AIX V4.1 TranScript Utilities 99
8. Key AIX V4.1 Print Spooling Subsystem Configuration Files and Programs 198
9. Commands Used in Printing 198
10. AIX V4.1 Print Spooling Subsystem Compatibility with System V 200
11. AIX V4.1 Print Spooling Subsystem Compatibility with BSD 201
12. AIX V4.1 Print Spooling Subsystem Compatibility with AIX V2 201
13. Supported Printers and Plotters (AIX V4.1) 203
14. PSF/6000 Printers Information 209
15. Colon File Escape Sequences Examples 223

© Copyright IBM Corp. 1991, 1994

Special Notices

This publication is intended to help customer personnel, systems engineers, and systems specialists to install, configure, and manage printers in the AIX V4.1 environment. It contains information on AIX V4.1 and the AIX V4.1 print spooling subsystem. The information in this publication is not intended as the specification of any programming interfaces that are provided by AIX V4 for the RISC System/6000 (5765-393). See the PUBLICATIONS section of the IBM Programming Announcement for AIX V4 for the RISC System/6000 (5765-393) for more information about what publications are considered to be product documentation.

References in this publication to IBM products, programs or services do not imply that IBM intends to make these available in all countries in which IBM operates. Any reference to an IBM product, program, or service is not intended to state or imply that only IBM's product, program, or service may be used. Any functionally equivalent program that does not infringe any of IBM's intellectual property rights may be used instead of the IBM product, program or service.

Information in this book was developed in conjunction with use of the equipment specified, and is limited in application to those specific hardware and software products and levels.

IBM may have patents or pending patent applications covering subject matter in this document. The furnishing of this document does not give you any license to these patents. You can send license inquiries, in writing, to the IBM Director of Licensing, IBM Corporation, 500 Columbus Avenue, Thornwood, NY 10594 USA.

The information contained in this document has not been submitted to any formal IBM test and is distributed AS IS. The use of this information or the implementation of any of these techniques is a customer responsibility and depends on the customer's ability to evaluate and integrate them into the customer's operational environment. While each item may have been reviewed by IBM for accuracy in a specific situation, there is no guarantee that the same or similar results will be obtained elsewhere. Customers attempting to adapt these techniques to their own environments do so at their own risk.

You can reproduce a page in this document as a transparency, if that page has the copyright notice on it. The copyright notice must appear on each page being reproduced.

The following terms, which are denoted by an asterisk (*) in this publication, are trademarks of the International Business Machines Corporation in the United States and/or other countries:

Advanced Function Presentation	Advanced Function Printing
Advanced Function Presentation Data Stream	AFP
AIX	AIX/ESA
AIX/6000	AIXwindows
AS/400	IBM
InfoExplorer	IPDS
MVS/ESA	Operating System/2
OS/2	OS/400
Pennant	Pennant Systems
Proprinter	PSF/6000
Quickwriter	Quietwriter
RISC System/6000	RT
Scalable POWERparallel Systems	SP2
System/370	VM/ESA
VSE/ESA	Xstation Manager

The following terms, which are denoted by a double asterisk (**) in this publication, are trademarks of other companies:

HP, Hewlett Packard, LaserJet, HP-PCL, HP-PCL4, HP-UX, JetDirect, PCL5, PCL5C, HP-GL	Hewlett-Packard Company
AppleTalk, LocalTalk, TrueType	Apple Computer, Inc
AT&T	AT&T, Inc.
Dataproducts	Dataproducts Corporation
DEC, Alpha, Ultrix	Digital Equipment Corporation
Diablo 630	Xerox Corporation
Display PostScript, Adobe System	Adobe Systems, Incorporated
Epson	Seiko-Epson Corporation
Palladium, Athena, Kerberos,	Massachusetts Institute Technology
X-Windows	Massachusetts Institute Technology
Lexmark, MarkNet, MarkNetXL	Lexmark International, Incorporated
Microsoft, MS-DOS, Windows	Microsoft Corporation
Motif, DCE, DME, OSF	Open Software Foundation
NCR, SystemV	NCR Corporation
SCO	Santa Cruz Operation
SunOS, SPARCstation, Network File System, NFS, Solaris	Sun Microsystems, Inc.
SUN, NIS, Solaris	Sun Microsystems, Inc.
Texas Instruments 855	Texas Instrument Incorporated
NetWare, Novell	Novell Inc.
UNIX	X/OPEN Company, Ltd.

Other trademarks are trademarks of their respective companies.

Preface

This document focuses on the printing facilities available in AIX V4.1. It is intended to assist people such as systems managers, systems engineers, or integrators in understanding this topic. This document is not designed to solve all printer problems that you may encounter. It is intended to be a thorough review of the topic of printing under AIX V4.1 that will assist in understanding the principles and function of this subsystem.

The document is organized as follows:

- Chapter 1, “Introduction”

  This provides an introduction to the basic concepts of printing in the AIX V4.1 environment, as well as a technical introduction to PSF/6000 and Palladium.

- Chapter 2, “Installing a Printer”

  This chapter reviews the process of installing a printer supported by AIX V4.1 and the basic configuration of the print spooling subsystem to support the new printer.

- Chapter 3, “Printing Files”

  This chapter reviews the new AIX V4.1 facilities available for making print requests and managing the progress of print requests through the print spooling subsystem.

- Chapter 4, “Further Print Spooling Subsystem Configuration”

  This chapter reviews the AIX V4.1 print spooling subsystem in some detail and outlines the facilities available to configure and manage print queues, print queue devices, virtual printers and printer device drivers.

- Chapter 5, “Advanced Printing Topics”

  This chapter covers several more advanced printing topics such as remote printing, terminal connected printers, Xstation connected printers, configuring nonsupported printers, and using the print spooling subsystem as a generic spooling system. A section on printing hints and tips is also included.

- Chapter 6, “Network Printing Options”

  This chapter covers several topics related to the network printing. It discusses how to configure and manage printers in the remote printing environment.

- Chapter 7, “Print Services Facility/6000”

  This chapter gives a technical description of PSF/6000. It is intended to show you the most common tasks that you have to perform in order to manage a Print Services Facility/6000 server and its printers.

This document is aimed at technical computer systems personnel responsible for supporting RISC System/6000 installations that require the use of printers or plotters. It assumes an existing level of general systems skills. These include:

- A basic familiarity with the RISC System/6000 and AIX V4.1 and the documentation associated with these offerings. In particular, SMIT is referenced extensively and it is presumed that the user of this document has a basic understanding of SMIT and the ability to perform simple navigation tasks in SMIT.

© Copyright IBM Corp. 1991, 1994

- The ability to perform some general technical tasks such as configuring a printer's communications interface (such as the serial port) using vendor supplied manuals, connecting a printer to a RISC System/6000 using appropriate cabling, running applications that exercise the printer subsystem, or logging into the AIX V4.1 environment.
- Certain sections imply deeper understanding of AIX V4.1. The section on remote printing implies that the systems administrator is capable of establishing a TCP/IP environment. The chapter on advanced topics assumes greater skill levels than the document does in general.

Note!

This document includes many examples of command output and SMIT screens. Later versions of AIX V4 for the RISC System/6000 (5765-393) may differ from the versions tested.

Related Publications

The following publications are considered particularly suitable for a more detailed discussion of the topics covered in this document.

- *AIX Version 4.1 Commands References* (SBOF-1851)
- *RISC System/6000 System Overview and Planning* (GC23-2406)
- *AIX Version 4.1 Files Reference* (SC23-2512)
- *IBM RISC System/6000 Hypertext Information Base Library 1.1 for AIX* (LC23-2689) for use with the InfoExplorer information retrieval system.
- *AIX Version 4.1 Getting Started* (SC23-2527)
- *AIX Version 4.1 System User* (SC23-2545)
- *AIX Distributed Environments: NFS, NCS, RPC, DS Migration, LAN Maintenance and Everything* (GG24-3489)
- *TCP/IP Tutorial and Technical Overview* (GG24-3376)
- *AIX Version 4.1 System Management Guide: Operating System and Devices* (SC23-2525)
- *AIX Version 4.1 Topic Index and Glossary* (SC23-2513)
- *IBM AIX Print Services Facility/6000: Print Administration Version 1.2* (S544-3817)
- *IBM AIX Print Services Facility/6000: Licensed Program Specifications* (G544-3815)
- *IBM AIX Print Services Facility/6000: AIX for Users of PSF* (G544-3877)
- *IBM AIX Print Services Facility/6000: Print Services Facility for Users of AIX* (G544-3814)
- *IBM AIX Print Services Facility/6000: Print Submission* (S544-3878)
- *IBM Page Printer Formatting Aid/6000: User* (S544-3918)
- *IBM AIX Print Services Facility/6000: AFP Conversion and Indexing Facility* (S544-3930)
- *IBM AIX Print Services Facility/6000: Update Guide for Print Administration and Print Submission* (G544-5224)

International Technical Support Center Publications

A complete list of International Technical Support Center publications, with a brief description of each, may be found in:

International Technical Support Organization Bibliography of Redbooks, Centers Technical Bulletins, GG24-3070.

© Copyright IBM Corp. 1991, 1994

Acknowledgements

The advisor for the second edition of this publication was:

Daniel François
International Technical Support Organization, Austin Center

The authors of this document were:

Luis Gerardo Rico Ceniceros
IBM Mexico

Marcelo Assahina
GSI/IBM Brazil

Thanks to the following people for the advice and guidance provided in the production of this document:

Kristin Moore
Pennant System Dallas

YS Botello
Pennant System Boulder

John Tesch
IBM Dallas

The author for the first edition of this publication was:

Mark Johnson
International Technical Support Organization, Austin Center

The document was the product of contributions from several authors.

Virginia Ingram
IBM US, NTSC Dallas

Mike Etherington
IBM UK

M.J. Beck
IBM PSPC, Austin

Fernando Martinez
IBM Colombia

© Copyright IBM Corp. 1991, 1994

Chapter 1. Introduction

While the paper-less office is an often-mentioned concept, the reality is that the vast majority of computer users still rely on printers to produce the information they want on paper. The fact that in all probability you are reading this document in a paper form is testament to this fact.

For a systems administrator, printers are a significant responsibility. Printers are perhaps the most complex mechanical component of modern computer systems. They require paper and specific supplies, such as toner or ribbons, to be fed to them. They may have physical problems such as paper jams and they can require routine maintenance such as cleaning or replacement of specific components. This means that they often demand more time and attention than other items such as terminals or processors.

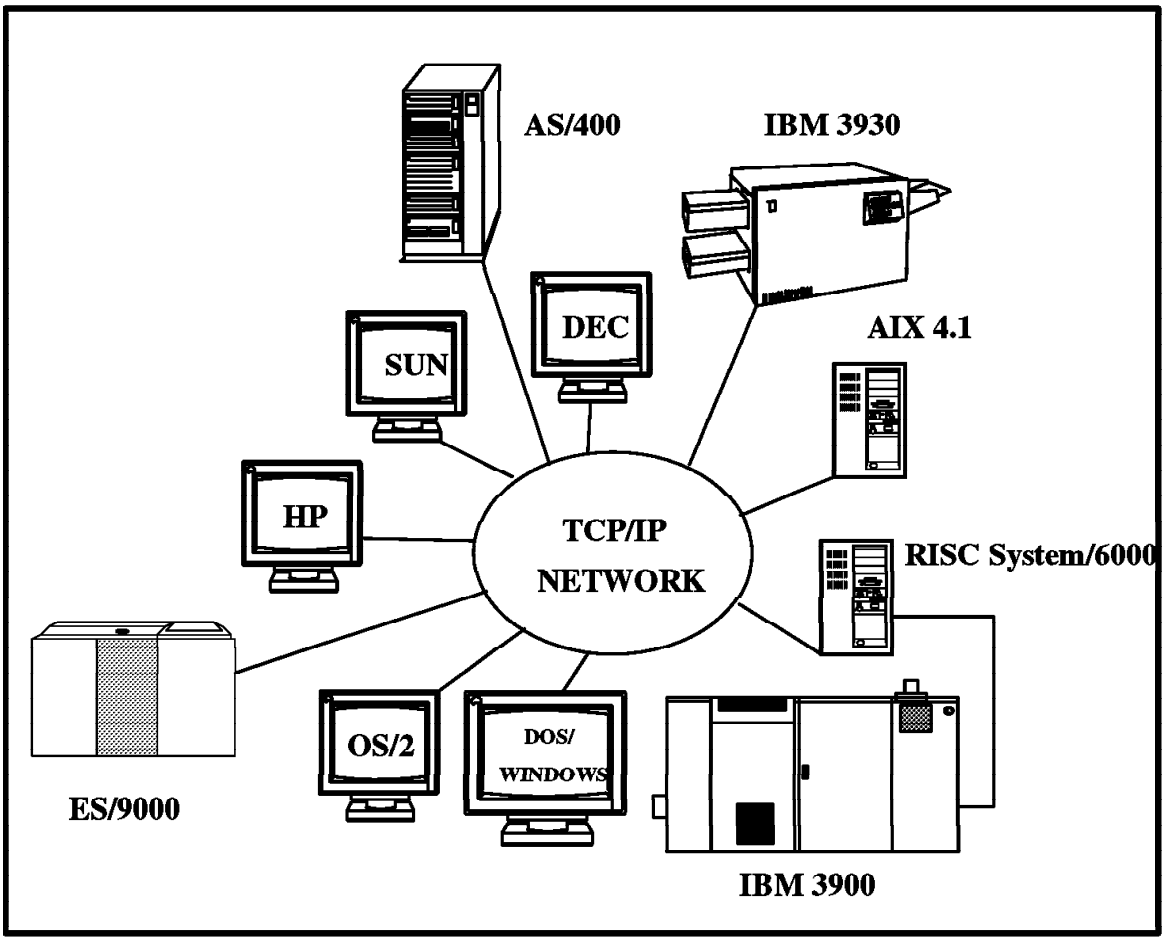

Figure 1. Today's Printing Environment

The systems management issues that printers pose for system administrators, though, relate to the fact that they are relatively complex devices to configure from an operating system point of view. Additionally, printers often form a crucial part of complex applications systems such as publishing, office or CAD. Printers are also associated with a major operating system subsystem. However this is changing very fast. Today we find the printing environment is expanding and becoming more

© Copyright IBM Corp. 1991, 1994

complex. The communications technology is also growing rapidly. We can see that this is true by the fact that Local Area Networks are normal in many enterprises today. These LANs are connected to a host network and may be interconnected to other LANs through routers, bridges or gateways.

The possibility of sharing data and computing resources that might be expensive, such as printers through a network, has made that business begin to focus on distributed-printing environments and application requirements in order to reduce operating costs and improve productivity. Moving computing resources as close as possible to the target users of the information can make printing more effective. In doing so, systems administrators have discovered that printing in a distributed environment is not as simple as it could be assumed. This is seen in the heterogeneous nature of the AIX* environment which represents multiple operating systems from multiple vendors. This also can be defined as an open systems environment.

In LAN environments printing is performed either on individual workstation-attached printers or on a shared printer on a LAN controlled by the print-server functions of a network operating system. In some cases we can find larger hosts such as a System/370* system or an AS/400* system attached to the LAN which usually have attached bigger printers. Those printers used to have impact technology and were able to print at very high speeds but the quality of the printed document was very poor.

Today, all-points-addressable laser printers have the capability of delivering high quality printing and very high printing speeds. However, the printer, whether it is a desktop printer attached to a single workstation or a system printer attached to host system, has to have the software to drive the printer acording to a specific data stream. This means that if we have a Local Area Network with workstations and host systems attached to it, we can't print from the host system to a desktop printer or from a workstation to the system printer, unless you have the software that makes the necessary conversion to the a specific data stream supported for each printer.

Most network operating systems have limited print-server functions. Recently many third party software vendors have introduced dedicated print-server software or combination hardware-software print-servers; all provide significantly more function than the print services in network operating systems. Those servers, though, can't drive system printers and desktop LAN printers at same time, which means that you can't print any kind of document, from different types of platforms, at any point of the network to any kind of printer.

The Print Services Facility (PSF/6000*) print server provides a solution for printing needs in AIX LAN environments, or for distributed printing from a host. Print services facility was designed to extend to AIX world the advantages of the IBM Advanced Function Presentation (AFP) architecture.

PSF/6000 is implemented according to client-server architecture. The print server runs on an RISC System/6000*, using AIX/6000* operating system. The clients on the LAN can be workstations with different operating systems, such as OS/2*, DOS/Windows**, UNIX** or AIX, host systems such as an AS/400 running 0S/400* or a System/370 running MVS, VM or VSE. Using PSF/6000, SNA and TCP/IP you can choose from a variety of print applications and different types of printers.

PSF/6000 allows us to print from a complex heterogeneous open systems environment with multiple types of data streams and supported printers. This means that you can print PostScript documents on a regular Hewlett-Packard Printer Control Language (HP-PCL**) printer or on an IBM Intelligent Print Data Stream (IPDS*) printer for example.

The potential of printing solutions that you can develop with the power of the RISC/6000, and the tools offered by PSF/6000 is very large. However, this seems to be only the begining of a new way of working with printers within a distributed computing environment using the client-server philosophy.

Today many goals have to be achieved, but a lot of new requirements have appeared. For instance, to support open systems, customers want to choose the best technologies that fulfil their needs, regardless of vendors. This means that hardware and software have to comply with international industry standards. In addition, the protection of hardware and software investments is one of the most important issues today. Systems administrators expect that new applications are able to be supported in a distributed network. In doing so, applications have to be based on standards that are vendor independent.

Since networks have grown so much, enterprises have in many cases many workstations that need to be managed, they also need a very powerful security system. Systems administrators want a highly distributed system that can be centrally controlled. As part of this approach, distributed printing is very important because it is viewed as a tool that moves print output closer to the end users where it is needed and thus improves productivity in the enterprise. The answer to these requirements and some other problems are solved with the IBM*'s implementation of Palladium**, which is a client-server solution for distributed printing.

It is the systems administrator's responsibility to manage both printers and the print spooling subsystem in a manner that provides the optimal level of printing service to a system's users. Also, according to the new printing needs that we have today, the systems administrator has to have the ability to manage network printing, printers and the different data streams that are supported now through PSF/6000. The systems administrators also must be able to understand the importance of a distributed environment and its advantages. The implementation of this environment is a new task for today's systems administrator.

To effectively manage the printing environment a systems administrator must understand the following topics:

- The manner in which the AIX V4.1 print spooling subsystem functions
- How to install printers
- How to configure printers and the print spooling subsystem
- How to print files and manage the progress of print requests through print spooling subsystem
- Network printing options
- The manner in which PSF/6000 functions
- PSF/6000 supported printers
- How to install and configure printers in a PSF/6000 environment

- How to share printers with different PSF/6000 clients
- How to print from different clients
- The different types of data streams that printers support
- What Palladium is
- What Distributed Computing Environment (DCE) is
- Printing with the AIX Gateway using print commands

This document reviews these topics and addresses some more advanced printing topics, printing via terminals, printing via IBM Xstations, and configuring nonsupported printers. In addition, it talks about the supported printers in both the AIX and PSF/6000 worlds.

1.1 A Technical Overview of Printing under AIX V4.1

To manage printers in an AIX V4.1 environment, it is important to understand the way in which AIX V4.1 implements printing facilities. This section reviews the manner in which printing is implemented in AIX V4.1 so that you may better understand the function of the print spooling subsystem. AIX V4.1 implements printing in a manner similar to many other UNIX variants, but with some key differences. After reviewing this chapter you should understand the general printing approach employed in AIX V4.1 and be able to contrast it with other printing systems you are familiar with.

1.1.1 Two Approaches to Printing

Under AIX V4.1 there are two basic methods that can be employed to drive or use printers that you might attach to a RISC System/6000. They are:

1. Printing by directly addressing the printer device driver

   In this environment an application or a user prints directly via the printer device driver. The device driver is sent a file which it then directs to the physical printer.

   There are advantages and disadvantages to printing directly to the device driver. The major disadvantage is that you bypass the spool facility; therefore, lose your ability to serialize print requests to a printer via the print spooling subsystem. This is because each application that uses the printer owns it for that period. Printing directly to the printer is advantageous in situations where the relationship between and application and a printer needs to be more secure or intimate.

   For example, if you have a check printing application you may wish to ensure, via interaction with a user, that the correct stationary is in place and that it is correctly positioned before sending output to the printer. Direct printing enables this to be done. Another example is the situation where an application such as a security application may wish to print one line messages to a printer over a long period of time. Again this is a scenario where direct printing via the device driver may be appropriate.

   In this environment the application driving the printer is directly responsible for ensuring the printer is correctly utilized.

2. Printing by utilizing the print spooling subsystem

In this environment information that a user or application wishes to be printed is sent to the spooling subsystem. The spooling subsystem will itself drive the printers and share them among the various applications and users who wish to access printers.

1.1.2 Printing via the Printer Device Driver

When printing via the printer device driver, an application sends output to the printer without the involvement of the print spooling subsystem. This is done by directing application output to the printer device driver. The printer device driver itself is an AIX V4.1 file (for example /dev/lp2) that communicates with the actual printer device. The application that is printing output must control the printer's action through the device driver.

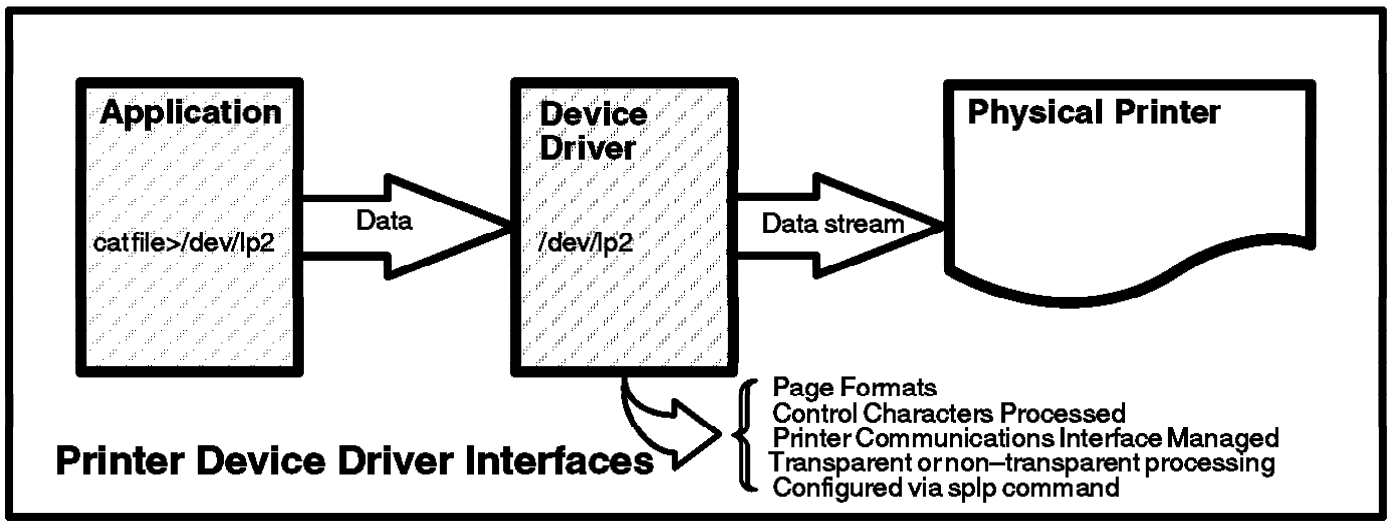

Figure 2. Printer Device Driver

Figure 2 shows how a device driver and application interact to print. The printer data stream is directed to the device itself via an application. For example, `ls -l /u/mine > /dev/lp2`, will print the output from the `ls` command on printer lp2. The `ls` command, may for example, produce a few hundred lines of output. The printer device driver itself will modify the data stream to ensure that the printer puts the right number of lines on a page, that pages are ejected at page ends, that a page eject is the last command sent, and that control characters such as line feeds and carriage returns are correctly interpreted. The device driver also controls the printer communications port through attributes such as line speed, parity and stop bits for that printer port.

A printer device driver's characteristics are determined when it is initially configured. Chapter 2, “Installing a Printer” on page 17 gives an example of the installation process. The manner in which the device driver behaves can be temporarily modified using the `splp` command or the `LPRMODS ioctl` subroutine. To permanently modify the behavior of the device driver you can modify the device configuration parameters via the `smit chgprt` command. The `lsattr` command can be used to query the current status of the printer device driver settings. Section 4.4, “Configuring and Managing Printer Devices” on page 68 deals with device drive configuration.

One important attribute of a printer device driver is that is can be set to a transparent mode. In this mode the data stream that is fed to the device driver by an application is not modified in any way. For example, when you print via the device driver it has a line length set as one of its characteristics. If line length was set to 80 characters the device driver would only send 80 character long lines to the printer even if the lines sent to the device driver are longer than 80 characters. In transparent mode, the device driver will not attempt to force its line length setting upon the file being passed through to the printer.

So, as you can surmise, in transparent mode the application that is attempting to print has control of the printer device and the application itself must issue the appropriate control characters to ensure printout looks as it should.

1.1.3 Printing via the Print Spooling Subsystem

The other major method of printing is to use the print spooling subsystem. AIX V4.1 features a substantially enhanced print spooling subsystem. This subsystem provides the flexibility required in the modern printing environment where printers often have multiple personalities allowing them to emulate a range of other printer devices. There are really two views of the print spooling subsystem that are important to understand:

1. The logical view of how printers, virtual printers and queues relate
2. The manner in which files are processed by the print spooling subsystem

First, we will discuss the logical view of printers and queues.

1.1.3.1 Printers, Virtual Printers, and Print Queues

A prerequisite to a discussion on the print spooling subsystem is a discussion to define terms that are used. From a logical viewpoint there are three major components of the print spooling subsystem. These are printers, print queues, and virtual printers.

- **Printers** are the actual devices on which output is printed. In AIX V4.1 printers are a pairing of the real printer and the printer device driver.
- **Print Queues** are the queues that print requests are directed to and the queues on which print jobs wait for an appropriate printer to become available. Queues can be served by one or more printers.
- **Virtual Printers** A virtual printer is a single logical view of the components that make up a printer from a user's perspective. A virtual printer describes the combination of a printer device, a data stream that a printer supports, and the specific configuration of the queue and queue device that serve the virtual printer.

Virtual printers are important because modern printers can support multiple data streams. For example, the Lexmark** IBM 4029 can support ASCII, PostScript**, and HP-PCL data streams. Users may wish to utilize all of these options on the same physical device. So, virtual printers provide a method for mapping multiple data streams to the single printer device. For example, the ASCII data stream mode of printing for a specific Lexmark IBM 4029 LaserPrinter is one virtual printer. The PostScript printing mode for the same Lexmark IBM 4029 LaserPrinter may be a second virtual printer definition associated with that same physical Lexmark IBM 4029 LaserPrinter device.

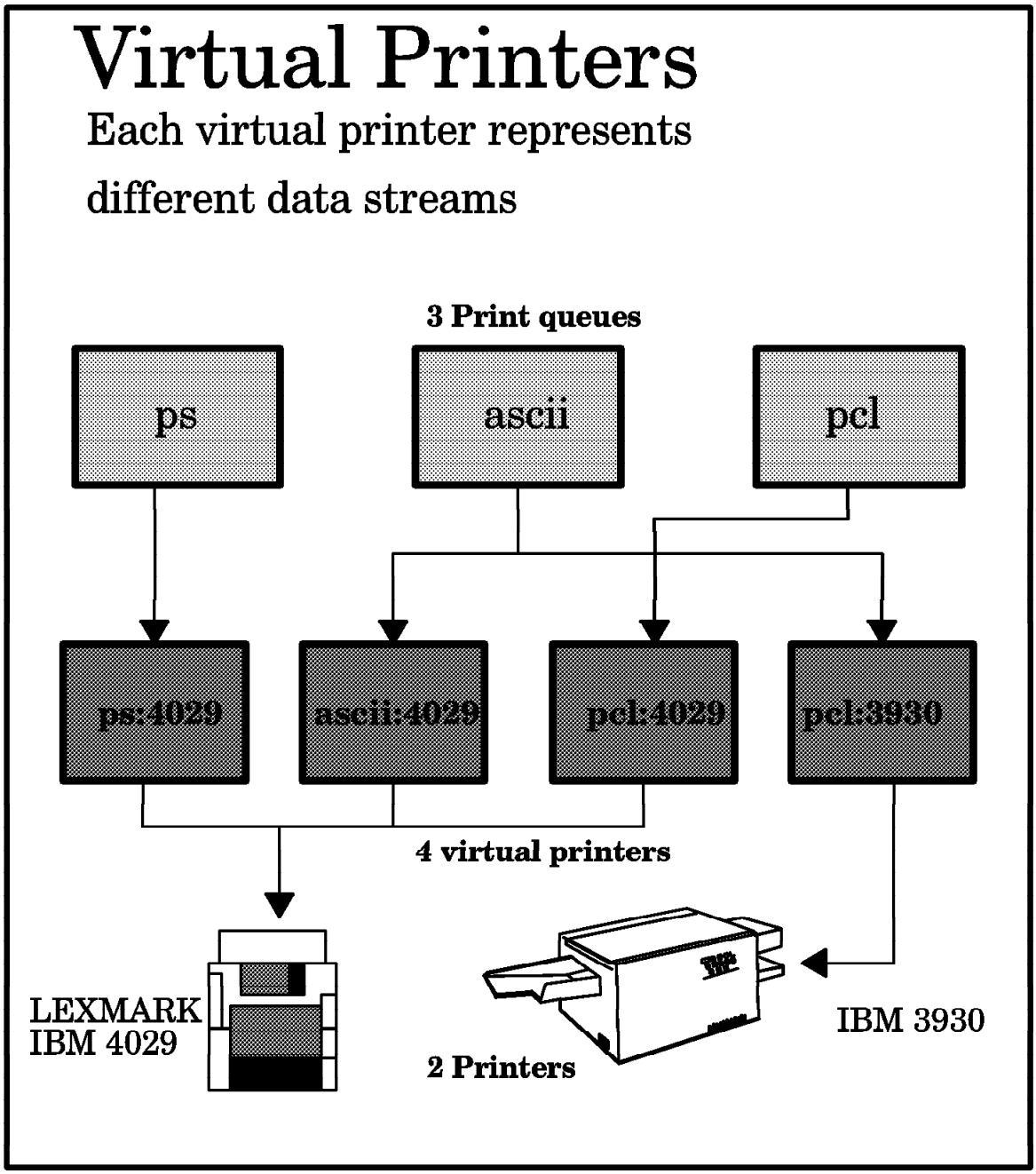

Figure 3. AIX V4.1 Virtual Printer Concept

As you can see from Figure 3 print queues can be serviced by more than one printer. The matching of printers to queues is done through virtual printers. So, in Figure 3, if a print request is sent to the queue ASCII it can be printed on either the Lexmark IBM 4029 or the IBM 3930 printer. It can, though, only be printed in ASCII mode on the 4029 printer. If two separate jobs are sent to both the ps and the pcl queue, then both jobs will be printed on the 4029 printer. The job sent to the pcl queue will drive the 4029 in PCL mode and the job sent to the ps queue will drive the 4029 in PostScript mode.

1.1.3.2 How Are Virtual Printers Defined by AIX V4.1

The information about virtual printers is kept in a database. After having configured a virtual printer, you will find a file named something like ibm4039.ascii:lp0.ascii:lp0 in the /var/spool/lpd/pio/@local/custom directory. Each virtual printer configured generates a unique file in this directory. This file contains all the printer control information that is appropriate for the ascii:lp0 virtual printer. This information can be modified via the `chvirprt` command or listed via the `lsvirprt` command. The name of the virtual printer will also match the name of the queue and queue device specified in the qconfig file. For example, if you create the asc:lp0 virtual printer using `mkpq` you will create a print queue called asc and a printer queue device called lp0 in the qconfig file. If you list available printers via `qchk -A` this printer will be listed as Queue asc and Dev lp0.

1.1.3.3 How Print Files Are Processed

The second view of the print spooling subsystem that is important to the systems administrator is how print requests are processed by the programs that make up the print spooling subsystem. Figure 4 on page 9 outlines the flow of a print request through the print spooling subsystem.

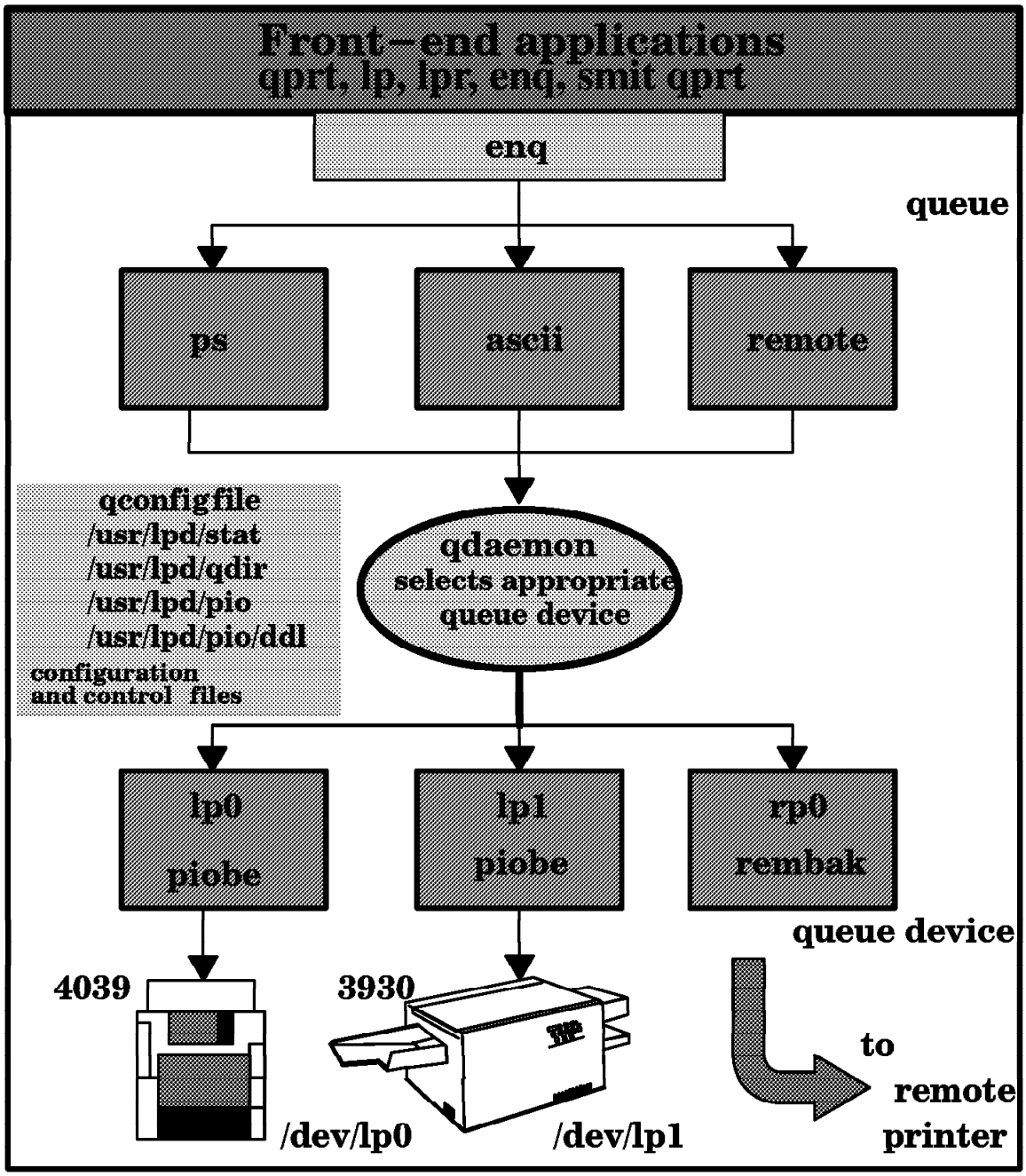

Figure 4. The Interactions of the AIX V4.1 Print Spooling Subsystem

As you can see from the Figure 4, you present the print request to the print spooling subsystem via one of the printing commands such as `qprt`, `lp`, `lpr`, or `enq`. Depending on the the command chosen there are many options available to control printing. For example, options such as the print queue to be used, the print job's priority, and some output control commands are some of the options that can be selected. The commands to request printing of a file are discussed in section 3.1.1, “Sending Print Requests to a Print Queue” on page 31.

All the commands that request the printing of a file invoke the AIX V4.1 `enq` command to actually place the print request into the appropriate queue. When the

enq command receives a print request, it reviews information about queues and printers which it has read from the qconfig configuration file, and then places the job request on the appropriate queue. This is done by updating files in the the /usr/lpd/stat and the /usr/lpd/qdir directories.

Once a job has been placed onto a print queue the qdaemon process is responsible for the jobs and passes them to the appropriate printer via the correct backend program. These backend programs are identified in the qconfig file via the backend= entry in the queue device stanza. Normally the queue device specifies that the piobe command or the rembak command be used to process the enqueued print request. The backend command can, though, be a command or shell script that you have written to serve a specific purpose. The piobe command controls printing to printer devices local to the system that the print spooling subsystem is running in. The rembak command will take a print job and transmit it to a specified remote system for printing.

1.1.4 The piobe Process

The piobe process then takes the print file passed to it through a a pipeline of appropriate filters (for example the PostScript filter), which first add: printer initialization commands as specified in the virtual printer attributes, then filter (for ASCII) or pass: the data through unaltered (for PostScript or passthrough) and send it on to the printer, and finally send printer reset sequences. Filtering the data usually involves setting the page width or length, substituting spaces for tabs, and similar actions.

In our previous discussion about the printer device drivers it was mentioned that the device driver can be set to a transparent mode. The piobe process uses the device driver in this transparent mode so that the printer data stream generated by piobe is not modified as it passes through the device driver to the actual printer device.

This means that the only way to specifically configure the behavior of a printer when using the print spooling subsystem is to modify the virtual printer database. Alternately, you may ask piobe to pass the print job directly to the printer via the appropriate flags (-d p for piobe or qprt for example) and let the application provide printer control.

1.1.5 The rembak Process

In many modern installations users of one system may wish to share a printing resource installed on another system. AIX V4.1 supports this via remote or networked printing facilities. These remote printing facilities are built upon the TCP/IP communications protocols. So, to utilize remote printing facilities your systems must be connected via the TCP/IP protocol and support the required TCP/IP applications.

The rembak program is the backend program used by the print spooling subsystem when printing to a remote host or printer that supports the lpd (line printer daemon) protocol which communicates on tcp/ip socket 515. One example is printing between AIX systems where rembak on the client system sends a request to lpd on the server system which is then passed to enq on the server to enter its local queueing system. Other hosts that support the lpd protocol include most UNIX systems, TCP/IP for OS/2, VM and MVS, the flexip program for Novell** Netware**, some internal printer cards such as newer HP** JetDirect** cards, and some

network terminal servers such as Lantronics. For large files sent to PC's use the `-T minutes` flag on rembak to avoid timeouts.

The `rembak` command sends a job to be queued on a server attached somewhere else in the network via TCP/IP protocols. The `rembak` command works as the client that expects to find a process called lpd daemon, this works as the server that receives print requests for being processed by the local qdaemon. The qdaemon passes the request to the piobe backend of the local system which continues with the normal local processing.

1.2 A Technical Overview of Print Services Facility/6000

Print Services Facility/6000 is an intelligent printer driver that allows you to have Advanced Function Presentation capabilities on a AIX stand-alone or distributed environment using TCP/IP and the Network File System** (NFS**). This means that you can use electronic forms, images, graphics, and typographical fonts in the documents you want to print from any platform running OS/2, DOS/Windows Version 3.1, OS/400*, UNIX, AIX, MVS, VM, or VSE.

PSF/6000 accepts different types of input data stream files:

- HP-PCL (Printer Control Language)
- PostScript Level 2
- Device-independent troff (ditroff)
- Advanced Function Presentation Data Stream (AFPDS)
- S/370 line data
- Unformatted ASCII with no escape sequences
- ASCII supported by the IBM Proprinter* II and the IBM Quietwriter* III
- Files created using extended UNIX code (EUC) and double-byte character set (DBCS) ASCII for Japanese, Korean and traditional Chinese languages

When you submit a print job to PSF/6000 you need to specify the type of data stream. Only AFP data stream is recognized automatically. PSF/6000 will transform the input data stream to the appropriate output data stream required for the printer. The output data streams supported by PSF/6000 are the following:

- Intelligent Print Data Stream (IPDS), used by Pennant printers
- Personal Printer Data Stream (PPDS), used by IBM's LaserPrinters
- Printer Control Language data streams (PCL4**, PCL5**, PCL5C**) from Hewlett-Packard**, used by IBM LaserPrinters, Hewlett-Packard Laser and LaserJet** printers, and some other compatible printers.

PSF/6000 performs centralized resource management for the printers it supports. This means that you don't have to worry about each printer having each resource; PSF/6000 distributes needed resources automatically. A resource is font overlay (eletronic form), page segment (image like a signature or logo), page definition and form definition. This includes the deletion of resources at the printers when a print job is finished. In addition, you have error recovery for IPDS printers. This means that you don't have to be worried if you have a paper jam or if you have to add

toner to the printer during the printing of a document, because the system is able to start from the page that it was printing before the problem.

1.2.1 How PSF/6000 Functions

PSF/6000 uses the existing AIX printing process described in previous sections of this document. However PSF/6000 adds a few programs which allows us to print high-quality documents on all the printers installed on a PSF/6000 server. These printers could be local attached desktop printers, LAN attached desktop printers, LAN attached mid-range printers, or channel attached mainframe printers. Since PSF/6000 uses the capabilities of the AIX environment we can:

- Display status of prints jobs that are waiting to be printed
- Cancel jobs in the print queue
- Hold and restart print queues by bringing print queue devices down and up.

When you submit a PSF/6000 print job, you can use SMIT to start a PSF/6000 print job or you can use AIX print commands, such as `enq`, `lp`, `lpr`, or `qprt`. We can use either the default paramenters for print-job proccesing, or you can specify other parameters from the command line with `-o` flags.

Regardless of the command that you used, the AIX operating system passes the print job to the `enq` command. The `enq` command places the job in the queue you specified when the job was submitted.

When the job is submitted to a PSF/6000 queue, the qdaemon invokes the PSF/6000 printer backend program called ainbe, instead of piobe or rembak backend programs.

When you print with PSF/6000, you have to configure the printers that will be used with PSF/6000. PSF/6000 updates the /etc/qconfig automatically.

The printer colon files used by AIX are replaced by PSF/6000 with the information you specified using the PSF/6000 SMIT printer configuration panels. This information is used by the `ainbe` backend program which transforms the incoming job into an output data stream of the type required by the printer that will print the job.

Since PSF/6000 is able to attach S/370 channel printers as well as medium-speed printers attached to a Local Area Network, two device drivers are provided. One for channel-attached IPDS printers and one for TCP/IP-attached IPDS printers. This makes those printers accessible to many users.

The following figure, shows the AIX printing process plus the PSF/6000 printing proccess acting as an integrated printing system.

Note: The capital letter C indicates that the PCL data generated by PSF/6000 is submitted for printing to PCL queue by the `qprt-P pcl -dp -Z!` command. In this case piobe takes the control of the proccess and prints the job on a printer that supports PCL data stream. What happens here is that PSF/6000 processes the job that comes in, transforms the data into either PCL or PPDS, and then places the job out on the normal AIX print queue for that device, using the passthru mode (-dp).

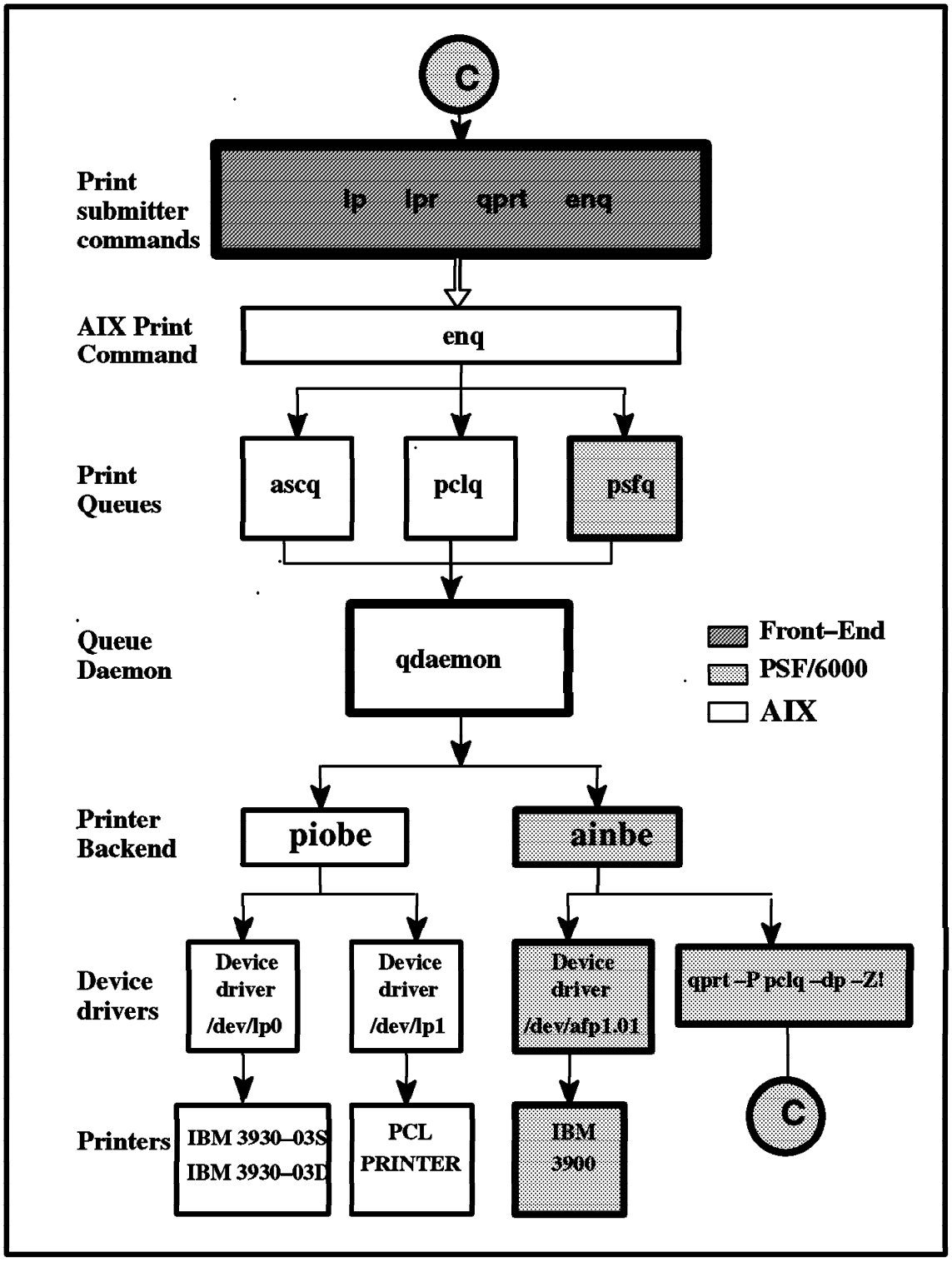

Figure 5. AIX and PSF/6000 Print Submission Flow

1.3 A Technical Overview of Palladium

Palladium is a print administration and management technology that provides functions for submitting and controlling print jobs. It also provides a set of system management and operator functions for controling print spoolers and supervisors. All these functions create a robust, reliable, client-server solution in an open system, networked, distributed print environment.

1.3.1 Understanding Client-Server Printing

Client-server printing is the result of many changes that have occurred in computer industry. In order to have a better understanding of these changes let's take a look at the following ideas:

Traditional computing environment

- Centralized computing, all processes were developed and controlled in a mainframe system
- Native or homogeneous operating systems and software
- Single vendor hardware
- Printers were connected directly to the mainframe system or via terminal or communications controllers
- All the printing operations were controlled in one place, in a room with special characteristics.

Client/server computing or distributed computing

- Decentralized computing through use of client and server workstations
- Operating systems and software are heterogeneous and from different vendors
- Hardware is provided by different vendors
- Printers with different speeds and capabilities are shared through the network; users can print either from a Local Area Network or from the host system.
- Multiple data streams supported
- Possibility of printing any kind of document from any kind of platform to any kind of printer from any point of a network

In a client/server model, the server is a machines and processes that provides services to other machines or process. The client is a machine or process that makes use of the provided services while it is running its own process.

Palladium constitutes a typical client/server based application, because it consists of a client side that requests a service and a server side that receives and executes the request, returning results to the client. As an example of this, a client located in one city requests files to be printed in another. The server manages the request an fulfills it by sending the files to an specific printer exactly at the location where the information is needed.

In addition, you also have these benefits:

- **Scalability**: A system can be easily expanded by adding more components and services

- **Interoperability**: Enables you to use software applications from different operating systems to run on hardware provided by other vendors

Client/server printing requires an infrastructure on which to build client-server applications. And that infrastructure is Distributed Computing Environment (DCE**).

1.3.2 Understanding Distributed Computing Environment

Distributed Computing Environment (DCE) provides a set of tools and services that simplifies the development of client-server applications. DCE is sponsored by the Open Software Foundation**. This means that all vendors that offer DCE will offer the same services and tools.

Palladium uses DCE services to support print management functions, such as a directory of logical printers, command authorization, notification, and so on.

The tools used by Palladium include:

- **Remote Procedures Calls (RPC)**: Provides communication between clients and servers by translating procedure calls such as print requests into network messages. This messages are sent to the specific Palladium component.
- **Directory Service**: Is a central repository for information about objects such as queues and printers in the distributed system.
- **Security service**: Provides secure communications and controlled access to the resources in the network. Palladium is provided with login authentication of users and administrators, verification of the operations that users and administrators are allowed to use, and verification of the resources that users are allowed to manage. For instance, an user is authorized to use a specific queue but not all queues.

1.3.3 What are the Key Characteristics of Palladium?

Palladium was designed acording to the international distributed printing standards which include the International Standards Organization (ISO), Document Printing Application (DPA), Institute of Electrical and Electronics Engineers (IEEE), System Administration Portable Operating Systems Interface (POSIX), and System Administration Interface/Printing.

Palladium supplies a common command line interface across all POSIX compliant platforms. This allows you to manage printing from one single location. A Graphical User Interface (GUI) enables users and administrators to use drag and drop techniques from windows.

More specifically Palladium has the following key characteristics:

- **Distributed Systems Support**: End-users, applications, print services, workstations may all be located on different systems within a network. Palladium is able to provide transparency for all functions. You can send a file to be printed to a queue associated to a printer without knowing the location of this printer.
- **Modular**: Either an administrator or a customer can install different modules in different workstations, or it can be installed in the same workstation without any problem. It is possible to add more components later, following future needs and enterprise expansion.

- **Printer Support**: Palladium is able to manage several data streams such as Intelligent Print Data Stream (IPDS), ASCII, or PostScript. It also supports Desktop, Mid-Range, and High-End mainframe printers.
- **System Management**: When you have a large printing environment this point becomes very important. Changes must be able to be made at one location and take effect across the network. For doing so, Palladium uses the DCE Directory Service.
- **Coexistence**: Palladium supports AIX and OS/2 print commands. Users can continue using the `lp` and `lpr` command while taking advantage of Palladium functions.

Chapter 2. Installing a Printer

Installing a printer under AIX V4.1 and configuring it into the print spooling subsystem is a simple task when compared to AIX V3.1. Now you deal with only one object (the print queue) rather than the previous four objects (queue, queue device, virtual printer and printer device).

To install a printer under AIX V3.1 and configure it into the print spooling subsystem you had to perform the following tasks:

- Connect the physical printer to your system
- Add a printer device driver
- Add a virtual printer

Under AIX V4.1 there was an improvement in the SMIT print interface. Now you just have to:

- Connect the physical printer to your system
- Add a print queue

There is also a desktop interface that helps adding printers. We provide an overview on this in 2.1.4, “Using the CDE Installation Assistant” on page 27.

2.1.1 Installing the Physical Printer

Follow the next steps to install the physical printer:

1. Review all relevant installation planning information such as the printer's own manuals and this entire chapter (Chapter 2, Installing a Printer) to ensure that you have the required components and information to install the printer in question.
2. Review your system's configuration and select the serial or parallel port which you plan to connect the printer.
3. Ensure that the communications port you plan to use is not already in use by other devices such as printers, terminals or modems. If the port is already in use, either move the device attached to the port or modify the configuration of that device. For example, for a tty device, set the Enable LOGIN field to disable. For a printer, set STATE to be configured at boot time to defined. This ensures that there is no conflict in demand for use of the port.
4. Shut down the system using the appropriate command (that is `smit shutdown`).
5. Connect the printer to the communications port (serial or parallel) you have selected to connect the printer. You must ensure that you have used the appropriate cabling. The *RISC System/6000 General Information and Planning Kit* provides information on planning the installation of devices such as printers.
6. Using the documentation provided with the printer, configure it appropriately. If using a serial interface take note of the settings that you have made for the items such as baud rate, stop bits, bits per character and flow control settings. You will need these to configure the AIX printer device driver correctly. For example, for an IBM Proprinter you may set baud rate to 9600 bps, parity to none, bits per character to 8, stop bits to 1, and xon/xoff to be used for flow control.

© Copyright IBM Corp. 1991, 1994

7. Power on the RISC System/6000 and ensure it restarts correctly.

2.1.2 Adding a Print Queue

Follow the next steps to add a print queue:

1. Log on as a user with appropriate privilege, such as root or a member of the printq admin group.
2. Enter the following command:

```
# smit mkpq
```

   After entering the `smit mkpq` command the following menu will be displayed:

```
                          Add a Print Queue

Move cursor to desired item and press Enter. Use arrow keys to scroll.

  # ATTACHMENT TYPE      DESCRIPTION
    local                Printer Attached to Local Host
    remote               Printer Attached to Remote Host
    xstation             Printer Attached to Xstation
    ascii                Printer Attached to ASCII Terminal
    hpJetDirect          Network Printer (HP JetDirect)
    file                 File (in /dev directory)
    other                User Defined Backend

F1=Help                 F2=Refresh              F3=Cancel
F8=Image                F10=Exit                Enter=Do
/=Find                  n=Find Next
```

3. As shown on the previous screen, select the `local` option, and press Enter. The following menu will be displayed:

```
                             Printer Type

Move cursor to desired item and press Enter.

  Bull
  Canon
  Dataproducts
  Hewlett-Packard
  IBM
  OKI
  Printronix
  QMS
  Texas Instruments
  Other (Select this if your printer type is not listed above)

F1=Help                 F2=Refresh              F3=Cancel
F8=Image                F10=Exit                Enter=Do
/=Find                  n=Find Next
```

4. From this menu, select the option that matches your printer brand. If your printer brand is not listed, select `Other`. In this example we have selected `IBM` because we are installing an IBM 4019 printer. After pressing Enter, the following screen will be displayed:

```
                              Printer Type

Move cursor to desired item and press Enter.

[TOP]
  ibm2380      IBM 2380 Personal Printer II
  ibm2380-2    IBM 2380 Plus printer (Model 2)
  ibm2381      IBM 2381 Personal Printer II
  ibm2381-2    IBM 2381 Plus printer (Model 2)
  ibm2390      IBM 2390 Personal Printer II
  ibm2390-2    IBM 2390 Plus printer (Model 2)
  ibm2391      IBM 2391 Personal Printer II
  ibm2391-2    IBM 2391 Plus printer (Model 2)
  ibm3812-2    IBM 3812 Model 2 Page Printer
  ibm3816      IBM 3816 Page Printer
  ibm4019      IBM 4019 LaserPrinter
[MORE...43]

F1=Help                 F2=Refresh              F3=Cancel
F8=Image                F10=Exit                Enter=Do
/=Find                  n=Find Next
```

5. If your printer model is not listed, select `Other`, which is in the bottom of the list. To get there, use the down arrow key. If you select a printer model that has its device driver installed (available) on your system, skip to step 14. Otherwise, the following screen will be displayed:

```
                        Printer Support Not Installed

Type or select a value for the entry field.
Press Enter AFTER making all desired changes.

                                                          [Entry Fields]
  Software to support the printer you selected
  is not installed. Press Enter to install
  printer support software packages.









F1=Help             F2=Refresh          F3=Cancel           F4=List
F5=Reset            F6=Command          F7=Edit             F8=Image
F9=Shell            F10=Exit            Enter=Do
```

6. You might be thinking why do you have to install your printer device driver, shouldn't it already be installed in your system? Well, according to AIX V4.1 philosophy, in order to reduce the operating system size, you have to choose what will be installed. When you first install AIX V4.1 it does not come with all device drivers AIX V4.1 supports. If you are going to install different printers check if these printers device drivers are already installed and if they are not installed, install them. Otherwise you will probably have to install a new device driver every time you install a new printer.

   To see if the your printer device driver is installed:

   - Type `smit printer` at the prompt line
   - Select `Printer/Plotter Devices`

- Select `List All Supported Printer/Plotters`

If your printer model is not listed, you will have to install its device driver.

7. In the previous screen press Enter to install your printer device driver. The following screen will be displayed:

```
                  Install Additional Printer/Plotter Software

Type or select a value for the entry field.
Press Enter AFTER making all desired changes.

                                                      [Entry Fields]
* INPUT device / directory for software              []                      +

F1=Help             F2=Refresh          F3=Cancel           F4=List
F5=Reset            F6=Command          F7=Edit             F8=Image
F9=Shell            F10=Exit            Enter=Do
```

8. Press F4 to see a list of available installation devices in your system. The following screen will be displayed:

```
                  Install Additional Printer/Plotter Software

Type or select a value for the entry field.
Press Enter AFTER making all desired changes.

                                                      [Entry Fields]
* INPUT device / directory for software              []                      +

  ___________________________________________________________________________
  |                  INPUT device / directory for software                   |
  |                                                                         |
  | Move cursor to desired item and press Enter.                            |
  |                                                                         |
  |   /dev/rmt0.1 (2.3 GB 8mm Tape Drive)                                   |
  |   /dev/fd0 (Diskette Drive)                                             |
  |                                                                         |
  | F1=Help                 F2=Refresh              F3=Cancel               |
F1| F8=Image                F10=Exit                Enter=Do                |
F5| /=Find                  n=Find Next                                     |
F9|_________________________________________________________________________|
```

9. In our example, we have a tape driver and a floppy driver. We have all AIX software on a 2.3GB 8mm tape so we have selected `/dev/rmt0.1 (2.3 GB 8mm Tape Driver)` option. After pressing Enter, the following screen will be displayed:

```
                Install Additional Printer/Plotter Software

Type or select values in entry fields.
Press Enter AFTER making all desired changes.

                                                      [Entry Fields]
* INPUT device / directory for software               /dev/rmt0.1
* SOFTWARE to install                                 []                      +

F1=Help             F2=Refresh          F3=Cancel           F4=List
F5=Reset            F6=Command          F7=Edit             F8=Image
F9=Shell            F10=Exit            Enter=Do
```

10. Press F4 to see a list of printer device drivers you can install. A screen like the following will be displayed:

```
                Install Additional Printer/Plotter Software

Ty ┌──────────────────────────────────────────────────────────────────────┐
Pr │                          SOFTWARE to install                         │
   │                                                                      │
   │ Move cursor to desired item and press F7. Use arrow keys to scroll.  │
*  │     ONE OR MORE items can be selected.                               │
*  │ Press Enter AFTER making all selections.                             │+
   │                                                                      │
   │ [TOP]                                                                │
   │   #------------------------------------------------------------------│
   │   # + = No license password required                                 │
   │   # $ = License found                                                │
   │   # ! = No license found                                             │
   │   #                                                                  │
   │   # The "all_licensed" filter will include filesets with "+" and "$".│
   │   #------------------------------------------------------------------│
   │   4.1.1.0  printers                                          ALL     │
   │     + 4.1.1.0  BULL Common Generic epson predef file                 │
   │ [MORE...171]                                                         │
   │                                                                      │
   │ F1=Help                F2=Refresh             F3=Cancel              │
F1 │ F7=Select              F8=Image               F10=Exit               │
F5 │ Enter=Do               /=Find                 n=Find Next            │
F9 └──────────────────────────────────────────────────────────────────────┘
```

11. Select all the printer device drivers you intend to install using F7 and the arrow keys and press Enter. In our example we have chosen to install only the `4.1.1.0 IBM 4019 LaserPrinter` option. The following screen will be displayed:

```
                  Install Additional Printer/Plotter Software

Type or select values in entry fields.
Press Enter AFTER making all desired changes.

                                                        [Entry Fields]
* INPUT device / directory for software                /dev/rmt0.1
* SOFTWARE to install                                 [ 4.1.1.0  IBM 4019
La> +

F1=Help             F2=Refresh          F3=Cancel           F4=List
F5=Reset            F6=Command          F7=Edit             F8=Image
F9=Shell            F10=Exit            Enter=Do
```

12. Press Enter and you will see the following screen:

```
                  Install Additional Printer/Plotter Software

Type or select values in entry fields.
Press Enter AFTER making all desired changes.

                                                        [Entry Fields]
* INPUT device / directory for software                /dev/rmt0.1
* SOFTWARE to install                                 [ 4.1.1.0  IBM 4019
La> +

             ____________________________________________________
             |                   ARE YOU SURE?                    |
             |                                                   |
             | Continuing may delete information you may want    |
             | to keep.  This is your last chance to stop        |
             | before continuing.                                |
             |     Press Enter to continue.                      |
             |     Press Cancel to return to the application.    |
             |                                                   |
F1=Help      | F1=Help          F2=Refresh       F3=Cancel       |
F5=Reset     | F8=Image         F10=Exit         Enter=Do        |
F9=Shell     |___________________________________________________|
```

13. Press Enter to install the printer device drivers you have selected. If you are successful, the following screen will be displayed:

```
                                COMMAND STATUS

Command: OK            stdout: yes           stderr: yes

Before command completion, additional instructions may appear below.

[TOP]
+-----------------------------------------------------------------------------+
                     Pre-installation Verification...
+-----------------------------------------------------------------------------+
installp:  Pre-installation verification may take several minutes.
Please wait...
Verifying selections...done
Verifying requisites...done
Results...

WARNINGS
--------
  Problems described in this section are not likely to be the source of any
  immediate or serious failures, but further actions may be necessary or
[MORE...36]

F1=Help             F2=Refresh          F3=Cancel           F6=Command
F8=Image            F9=Shell            F10=Exit            /=Find
n=Find Next
```

14. Now that you have your printer device driver installed, press F3 and you will get back to the prompt sign. You have to start again from step 2 (entering `smitty mkpq`) until you get the next screen:

```
                              Printer Type

Move cursor to desired item and press Enter.

[TOP]
  ibm2380      IBM 2380 Personal Printer II
  ibm2380-2    IBM 2380 Plus printer (Model 2)
  ibm2381      IBM 2381 Personal Printer II
  ibm2381-2    IBM 2381 Plus printer (Model 2)
  ibm2390      IBM 2390 Personal Printer II
-------------------------------------------------------------------------------
                            Printer Interface

Move cursor to desired item and press Enter.

  parallel
  rs232

F1=Help                 F2=Refresh              F3=Cancel
F8=Image                F10=Exit                Enter=Do
/=Find                  n=Find Next
```

15. Using the previous screen, select which type of connection you are using to connect your printer to your system. In our example we have connected our printer using the parallel port. There is an example of this screen for a serial printer in section 2.1.3.2, “Serial Printer Example” on page 26. After selecting the `parallel` option the following screen will be displayed:

```
                              Printer Type

Move cursor to desired item and press Enter.

[TOP]
  ibm2380      IBM 2380 Personal Printer II
  ibm2380-2    IBM 2380 Plus printer (Model 2)
  ibm2381      IBM 2381 Personal Printer II
  ibm2381-2    IBM 2381 Plus printer (Model 2)
  ibm2390      IBM 2390 Personal Printer II
_______________________________________________________________________________
_______________________________________________________________________________
                             Parent Adapter

Move cursor to desired item and press Enter.

  ppa0 Available 00-00-0P Standard I/O Parallel Port Adapter

F1=Help                 F2=Refresh              F3=Cancel
F8=Image                F10=Exit                Enter=Do
/=Find                  n=Find Next
```

After entering the printer of choice, the parent adapter selection list is displayed.

16. In the previous screen there was only one adapter to choose. If there were more than one adapter, they would also be listed. Select the parent adapter that corresponds to the communications port you have connected your printer. The following screen will be displayed:

```
                              Add a Print Queue

Type or select values in entry fields.
Press Enter AFTER making all desired changes.

                                                      [Entry Fields]
  Description                                        IBM 4019 LaserPrinter

  Names of NEW print queues to add
     ASCII                                           []
     GL Emulation                                    []
     PCL Emulation                                   []
     PostScript                                      []

  Printer connection characteristics
*    PORT number                                     [p]                    +
     Type of PARALLEL INTERFACE                      [standard]             +
     Printer TIME OUT period (seconds)               [600]                  +#
     STATE to be configured at boot time              available             +



F1=Help             F2=Refresh          F3=Cancel           F4=List
F5=Reset            F6=Command          F7=Edit             F8=Image
F9=Shell            F10=Exit            Enter=Do
```

Figure 6. Adding a Print Queue Menu - Parallel Printer

17. In the previous screen you are prompted to choose a name for each queue created for each type of mode your printer can emulate. Choose names so that it is easy to remember the name of each queue. In our example, we have chosen the name `4019ascii` for the ASCII queue, `4019gl` for the GL Emulation queue, `4019pcl` for the PCL Emulation queue and `4019ps` for the PostScript queue. After choosing the queue names press Enter.

    If you see a screen like the following, you have successfully configured a printer into the print spooling subsystem.

```
                                COMMAND STATUS

Command: OK            stdout: yes           stderr: no

Before command completion, additional instructions may appear below.

Added printer 'lp0'.

Added print queue '4019ascii'.
Added print queue '4019gl'.
Added print queue '4019pcl'.
Added print queue '4019ps'.









F1=Help             F2=Refresh          F3=Cancel           F6=Command
F8=Image            F9=Shell            F10=Exit            /=Find
n=Find Next
```

2.1.3 Verifying Printer Output Characters with lptest

After a printer has been configured, the ability of the printer output characters should be tested. The printer may need to be reconfigured if problems are detected. Output may be printed using the `lptest` command. The syntax of the `lptest` command is `lptest [Length Count]`

The `lptest` command writes the traditional ripple test pattern on a standard output device such as a terminal or printer. In 96 lines, this pattern will print all 96 printable ASCII characters in each position. While originally created to test printers, the ripple pattern is quite useful for testing terminals, driving terminal ports for debug purposes, or any other task where a quick supply of random data is needed.

Using the `lptest` command, you can specify the output line length if the default length of 79 is not appropriate. You can also specify the number of output lines to be generated if the default count of 200 is not appropriate. Note that if count is specified, length must also be specified.

2.1.3.1 Examples Using the lptest Command

1. To display five lines of 80-column test output on the printer, enter:

```
# lptest 80 5 | qprt -P 4019ascii
#
```

When entered, the printer will print the information that is displayed in the following example on the 4019 printer through its ASCII queue.

2. To print five lines of 80-column test output to STDOUT, enter:

```
# lptest 80 5
!"#$%&'()*+,-./0123456789:;<=>?@ABCDEFGHIJKLMNOPQRSTUVWXYZ[\]¬_ abcdefghijklmnop
#$%&'()*+,-./0123456789:;<=>?@ABCDEFGHIJKLMNOPQRSTUVWXYZ[\]¬_ abcdefghijklmnopqr
$%&'()*+,-./0123456789:;<=>?@ABCDEFGHIJKLMNOPQRSTUVWXYZ[\]¬_ abcdefghijklmnopqrs
%&'()*+,-./0123456789:;<=>?@ABCDEFGHIJKLMNOPQRSTUVWXYZ[\]¬_ abcdefghijklmnopqrst
&'()*+,-./0123456789:;<=>?@ABCDEFGHIJKLMNOPQRSTUVWXYZ[\]¬_ abcdefghijklmnopqrstu
```

Figure 7. Ripple Test Pattern to STDOUT (Partial Display) - Using lptest

2.1.3.2 Serial Printer Example

The example printer installation in section 2.1.2, “Adding a Print Queue” on page 18 was based on a parallel printer. When configuring a serial printer, the options and input forms are little different. The following screen is an example of the Add a Print Queue menu for adding a serial printer, which would be seen instead of the one seen in Figure 6 on page 24.

```
                              Add a Print Queue

Type or select values in entry fields.
Press Enter AFTER making all desired changes.

                                                      [Entry Fields]
  Description                                        IBM 7372 Color Plotter

* Name of new PRINT QUEUE to add                    []

  Printer connection characteristics
*    PORT number                                    [s1]                 +
     BAUD rate                                      [9600]                    +
     PARITY                                         [none]                    +
     BITS per character                             [8]                       +
     Number of STOP BITS                            [1]                       +
     FLOW CONTROL to be used                        [dtr]                     +
     Printer TIME OUT period (seconds)              [300]                     +#
     STATE to be configured at boot time             available                +



F1=Help             F2=Refresh          F3=Cancel           F4=List
F5=Reset            F6=Command          F7=Edit             F8=Image
F9=Shell            F10=Exit            Enter=Do
```

Figure 8. Add a Print Queue Menu - Serial Printer

When this screen is displayed, you must enter the serial communications interface configuration characteristics as noted in section 2.1.1, “Installing the Physical Printer” on page 17, step 6.

2.1.4 Using the CDE Installation Assistant

To call the CDE Installation Assistant, type the following command:

```
#/usr/sbin/install_assist
```

The following window will be displayed:

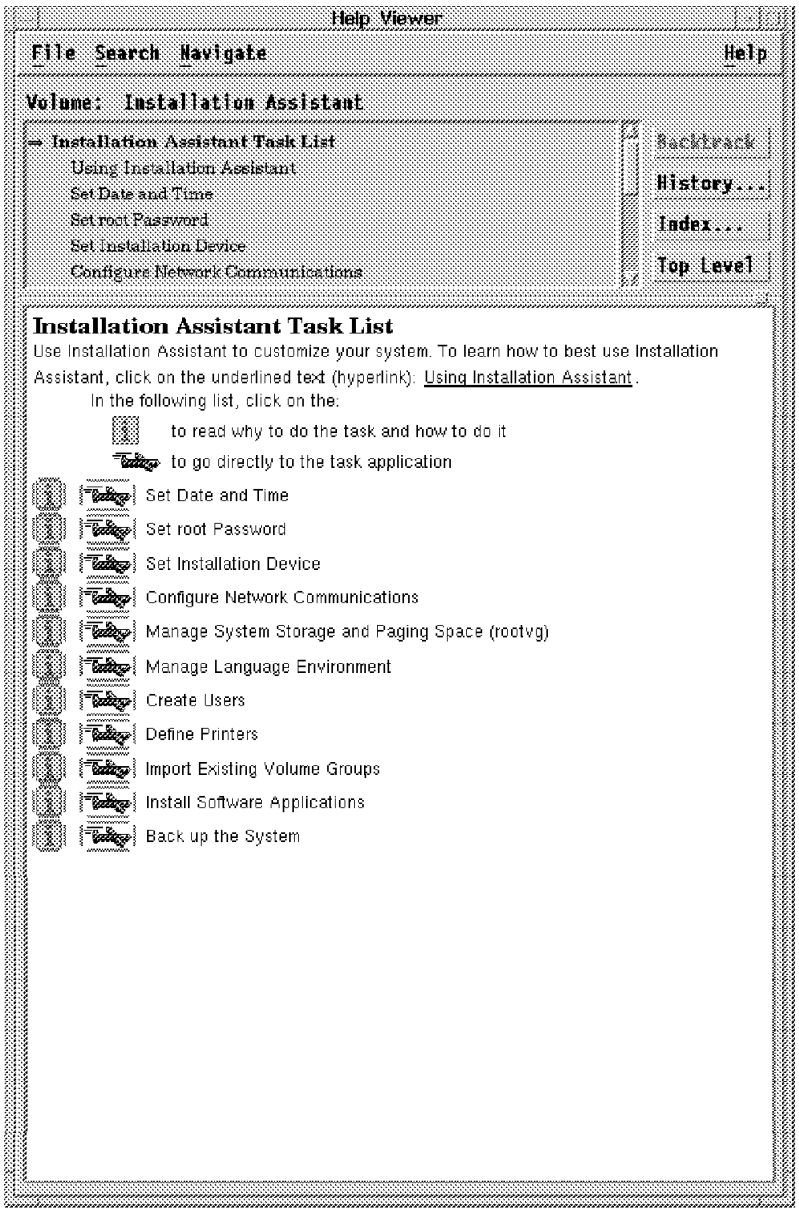

Figure 9. Installation Assistant Window

Using the left mouse button, click the **i** icon and the following window will be displayed:

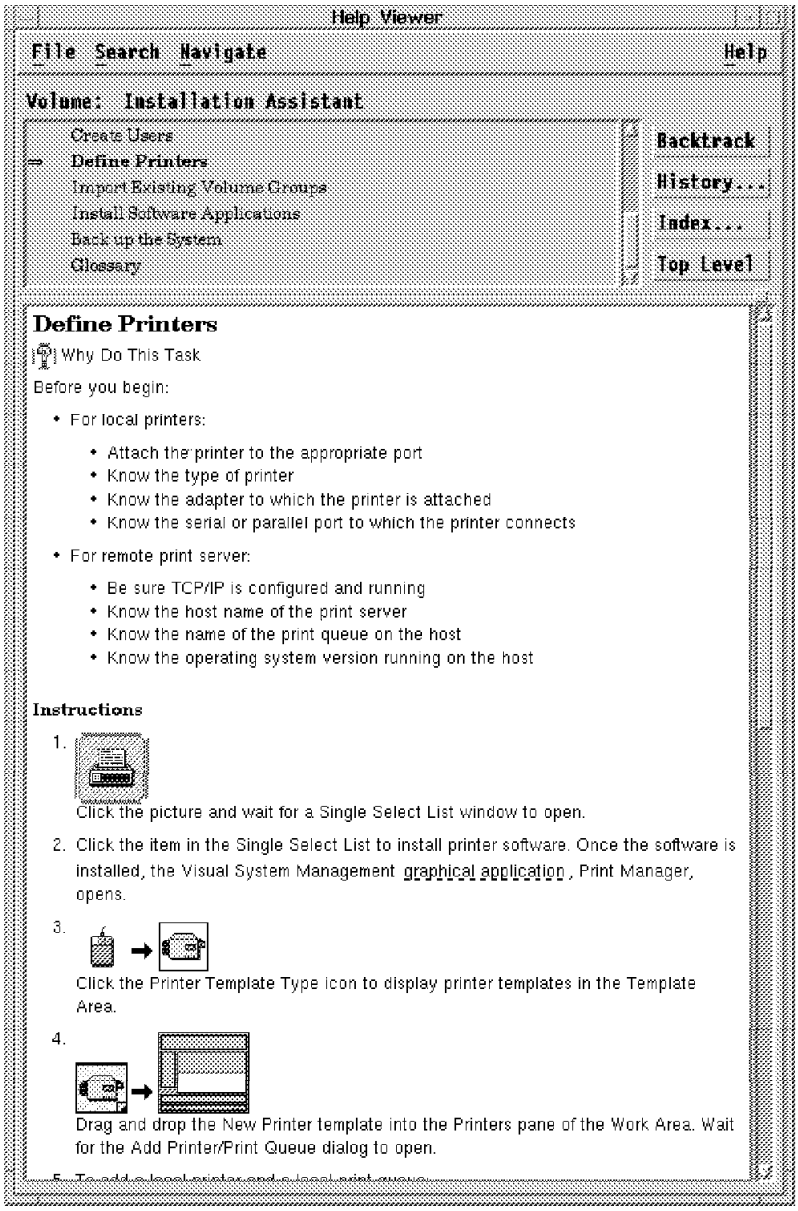

Figure 10. Installation Assistant Information Window

Following is the window you get after clicking the **airplane** icon for the Define Printers line in Figure 9 on page 27. You can also get this window by clicking the printer **icon** in Instruction 1 on the previous window:

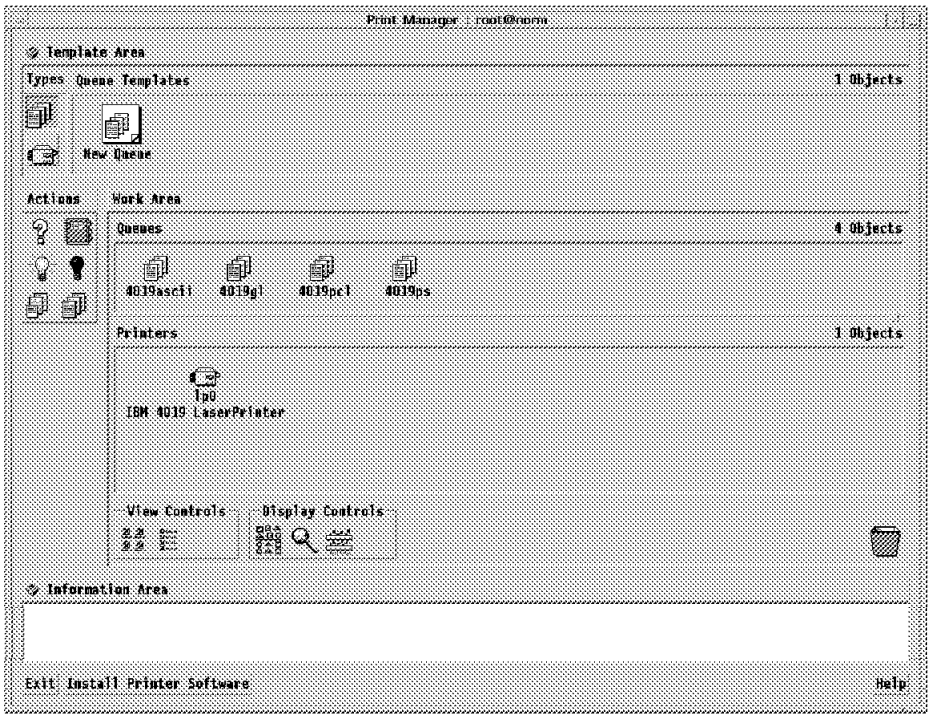

Figure 11. Installation Assistant Spool Manager Window

Based on the previous window, follow the instructions in Figure 10 on page 28 to add a new printer to the print spooling subsystem. You just have to drag and drop and type some information like queue names. You can also delete and modify queue and printer definitions.

Chapter 3. Printing Files

Now that we have a printer configured we will probably want to use it. This chapter reviews the commands available to request a job be printed and then manage the progress of that job through the print spooling subsystem. It is important that a systems administrator develops a good understanding of these commands, as users will often seek assistance on how to meet their more complex printing requirements or to get that special rush job printed.

This chapter includes sections that review the following topics:

- Sending print requests to a print queue
- Listing print requests within a print queue
- Holding and releasing jobs
- Moving jobs between queues
- Prioritizing jobs in a print queue
- Canceling jobs in a print queue
- Using the `enq` Command
- Using the `qprt` Command

If you are already familiar with the System V commands such as `lp`, `cancel`, `lpstat` and so on, or the BSD commands such as `lpr`, `lpq` or `lprm` you can continue to use these commands for printing and managing print queues. Appendix A.2, “Compatibility of the AIX V4.1 Print Spooling Subsystem” on page 200 reviews which BSD and System V printing commands are supported by AIX V4.1. This section focuses on the AIX V4.1 facilities that are provided to address these requirements. These commands offer the greatest available function for making print requests and managing the print queues.

3.1.1 Sending Print Requests to a Print Queue

The first step in the process of printing is to place a print job or request into the print spooling subsystem. AIX V4.1 features a number of commands and facilities to perform this task. There is one prerequisite to initiating a print request, though. Before you can print a file, you must have read access to it.

3.1.1.1 Starting a Print Job Using the qprt Command

The `qprt` command creates and queues a print job. This command can also be invoked through SMIT via the `smit qprt` command. The `qprt` command has a large variety of parameters that can be used. For this reason it is suggested that the use of the SMIT version of the command may be advantageous for many users.

To use SMIT, enter:

```
# smit qprt
```

When entered, the following input screen is displayed:

© Copyright IBM Corp. 1991, 1994

```
                                    Start a Print Job

Type or select a value for the entry field.
Press Enter AFTER making all desired changes.

                                                        [Entry Fields]
  PRINT QUEUE name                                    []                      +

F1=Help             F2=Refresh          F3=Cancel           F4=List
F5=Reset            F6=Command          F7=Edit             F8=Image
F9=Shell            F10=Exit            Enter=Do
```

Figure 12. The smit qprt Menu

To print the desired file, fill in with the print queue name where you want to print your file or press F4 to see a list of available queues. Press Enter after selecting the queue. If no printer is specified the default is used. In our example the following screen is displayed after pressing F4.

```
                              Start a Print Job

Type or select a value for the entry field.
Press Enter AFTER making all desired changes.

                                                        [Entry Fields]
  PRINT QUEUE name                                    []                      +



   |_____________________________________________________________________|
   |                          PRINT QUEUE name                           |
   |                                                                     |
   | Move cursor to desired item and press Enter. Use arrow keys to scroll.|
   |                                                                     |
   |   # PRINT QUEUE[:PRINTER[      DESCRIPTION                          |
   |     4019ascii                  ibm4019 (ASCII)                      |
   |     4019gl                     ibm4019 (GL Emulation)               |
   |     4019pcl                    ibm4019 (PCL Emulation)              |
   |     4019ps                     ibm4019 (PostScript)                 |
   |                                                                     |
   | F1=Help                F2=Refresh             F3=Cancel             |
F1 | F8=Image               F10=Exit               Enter=Do              |
F5 | /=Find                 n=Find Next                                  |
F9 |_____________________________________________________________________|
```

The `qprt` command can also be used from the command line. The `qprt` command is described in more detail in *AIX Version 4.1 Commands References* (SBOF-1851).

Select to which queue you will send your print request. In our example we have chosen the `4019ascii` queue. The following screen is displayed:

```
                              Start a Print Job

 Type or select a value for the entry field.
 Press Enter AFTER making all desired changes.

                                                        [Entry Fields]
   PRINT QUEUE name                                    [4019ascii]            +




    ___________________________________________________________________________
    |                          Print File Type                                 |
    |                                                                          |
    | Move cursor to desired item and press Enter.                             |
    |                                                                          |
    |   a ASCII                                                                |
    |   p pass-through                                                         |
    |   s PostScript                                                           |
    |                                                                          |
    | F1=Help                 F2=Refresh              F3=Cancel                |
 F1 | F8=Image                F10=Exit                Enter=Do                 |
 F5 | /=Find                  n=Find Next                                      |
 F9 |__________________________________________________________________________|
```

This is a new feature in AIX V4.1. It does not matter if your queue is an ASCII, PostScript, GL, PCL or any other type. All the available print options will be displayed. These options are created at the time the print queue is created. In our example, we had three options for the 4019 ASCII queue. We will print a postscript file so we have selected the `Postscript` option and pressed Enter. The following screen is displayed:

```
                                Start a Print Job

Type or select values in entry fields.
Press Enter AFTER making all desired changes.

[TOP]                                                   [Entry Fields]
  Print queue name                                     4019ascii
* Name of FILE to print                               []

  -------------- Text Print Options -------------

  ----------- Job Processing Options ------------
  Number of COPIES                                    [1]                    +#
  Place job in 'HELD' state when queued?               no                    +
  COPY FILE and print from copy?                       no                    +
  REMOVE FILE after print job completes?               no                    +
  Print job PRIORITY                                  [15]                   +#
  Pre-processing FILTER NAME                          []                     +
  INITIALIZE printer?                                  full initialization   +
  RESTORE printer?                                     yes                   +
[MORE...18[

F1=Help             F2=Refresh          F3=Cancel           F4=List
F5=Reset            F6=Command          F7=Edit             F8=Image
F9=Shell            F10=Exit            Enter=Do
```

Fill in `Name of FILE to print` field with the name of the file you want to print, make all necessary modifications and press Enter to print your file. If you are successful you will see a screen like the following:

```
                                COMMAND STATUS

Command: OK            stdout: yes           stderr: no

Before command completion, additional instructions may appear below.

Job number is: 18









F1=Help             F2=Refresh          F3=Cancel           F6=Command
F8=Image            F9=Shell            F10=Exit            /=Find
n=Find Next
```

You might have noticed in the previous screen the line `Job number is: 18`. This is a new feature in AIX V4.1. It is the number of the print request you have submitted. You can also get this job number when printing through commands. When using the `enq` and the `lpr` command, use the `-j` flag. When using the `qprt` command use the `-#j` flag.

3.1.2 Listing Print Requests Within a Print Queue

Once a print job has been submitted to the queueing system you may wish to see the status of the job on the print spooling subsystem. You can do this through SMIT or commands. In both ways you can review the contents of one or more print queues to check the current status of the queues and the jobs you have submitted. They also show the status of printers and queues. This section describes how to use the `enq`, `qchk`, and `qstatus` commands to list queue information. These commands report on the status of queues in a consistent manner. Figure 13 illustrates the key attributes reported via the queue status commands and what they refer to.

```
Queue   Dev   Status    Job Files              User          PP %   Blks  Cp Rnk
------- ----- --------- --- ------------------ ---------- ---- -- ----- --- ---
4019asc lp0   RUNNING    24 figure1.ps         root           0 66   224   1   1
              QUEUED     25 inst.script        root                  224   1   2
              QUEUED     26 STDIN.15271        root@bob4             354   1   1
4019gl  lp0   READY
4019pcl lp0   READY
4019ps  lp0   READY
              HELD       22 prprint.ps         root                   27   1   1
```

Queue	The queue name used in the qconfig file
Dev	The queue device name used in the qconfig file
Status	The current status of the job. See Table 1 on page 36
Job	The job number of this print job, which is used by many of the print spooling subsystem control commands such as `qcan`
Files	The name of the files being printed
User	The user ID of the user that owns the job
PP	Pages in the requested print job
%	Percentage of the job completed so far
Blks	The number of blocks the print job has been broken into
Cp	The number of copies of the requested print job that will be printed
Rnk	The job's rank in the print queue, the job ranked 1 should be printing

Figure 13. AIX V4.1 Printer Status Command Information

As you can see from Figure 13, commands that query the print queue status show the current state of printers and queues that are defined in the qconfig file. The qconfig file is discussed in more detail in section 4.1.1, “The qconfig File” on page 45. Table 1 on page 36 summarizes the types of status information for printers that you are likely to see when querying the print spooling subsystem. The following table describes entries which may be displayed in the Status column:

Table 1. Printer Status Definitions

Status	Explanation
READY	Indicates that the printer is up and ready to accept jobs.
DEV_WAIT	Indicates that either the printer is not online, out of paper, has a paper jam, or any similar problem which will prevent the job from printing. Normally, the problem that causes this state has also caused a message to be sent to the job owner or the operator.
RUNNING	Indicates that a job is either enroute to be printed, or is printing.
HELD	Indicates that the job is held and will not be put on the queue until it is released using the `qhld` or `enq` commands
DOWN	Indicates that the printer is not online, probably taken offline by the operator for maintenance.
UNKNOWN	Indicates that the status command cannot determine the status of the printer. This state is often an indicator of problems with printers or the print spooling subsystem.
OPR_WAIT	Indicates that the job is suspended, waiting on the an operator response to a message. See section 5.7.4, “Using Messages to a Printer Operator” on page 106 for a discussion of user messages.

3.1.2.1 Displaying the Status of a Print Queue - The qchk Command

The `qchk` command can be used from the command line or via SMIT. The `qchk` command displays the current status information regarding specified print jobs, print queues, or users. Use the appropriate flag followed by the requested name or number to indicate specific status information.

3.1.2.2 An Example of Using smit qchk

1. To use `qchk` from SMIT enter:

```
# smit qchk
```

2. The following screen will be displayed:

```
                        Show the Status of Print Jobs

Type or select values in entry fields.
Press Enter AFTER making all desired changes.

                                                      [Entry Fields]
* PRINT QUEUE name (* for all queues)                [4019ascii]             +
  Print JOB NUMBER                                   []                      +#
  Print JOB OWNER                                    []

F1=Help             F2=Refresh          F3=Cancel           F4=List
F5=Reset            F6=Command          F7=Edit             F8=Image
F9=Shell            F10=Exit            Enter=Do
```

In this screen you can choose to list information about all print jobs sent to a specific queue by filling the `PRINT QUEUE name (* for all queues)` field with this queue name.

- If you want to list information about a specific job number in the specified queue, fill the job number in the `Print JOB NUMBER` field.
- If you want to list information about a specific print job owner in the specified queue, fill the `Print JOB OWNER` field with the print job onwer's userid.

To list information about all print requests on all queues fill the `PRINT QUEUE name (* for all queues)` field with * and leave other fields blank.

3.1.2.3 Examples of Using qchk from the Command Line

1. To display the default print queue status, enter:

```
# qchk
Queue   Dev   Status    Job Files               User         PP %   Blks Cp Rnk
------- ----- --------- --- ------------------- ---------- ---- -- ----- -- ---
4019asc lp0   DEV_WAIT   18 STDIN.10675         root                 1  1   1
```

The `qchk` command with no flags specifies the default print queue.

When the name of the file is displayed similar to this example, it is an indication that the job was probably sent through a pipe (|). In other words, a command similar to `cat myfile | lp` was used. Only data was passed to the `lp` command (not a file name).

2. To display the long status of all queues until empty, while updating the screen every five seconds, enter:

```
# qchk -A -L -w 5
 Queue   Dev   Status    Job     Name           From           To
                         Submitted        Rnk Pri       Blks  Cp          PP %
 ------- ----- --------- ---------        --- ---      ----- ---        ---- --
 4019asc lp0   DEV_WAIT   28     install.ps     root@bob4      root@bob4
                        11/12/94 12:51:56    1  15        508   1

                              /var/spool/lpd/dfA009bob4
               HELD       27     inst.ps        root           root
                        11/12/94 12:29:20    2  15        224   1

                              //inst.ps
 4019gl  lp0   READY
 4019pcl lp0   READY
 4019ps  lp0   READY
               HELD       22     prprint.script root           root
                        11/12/94 10:12:48    1  15         27   1

                              //prprint.script
               HELD       26     /inst.ps       root           root
                        11/12/94 12:27:08    2  15        224   1

                              /inst.ps
```

In the previous output screen you may have noticed the file `/var/spool/lpd/dfA009bob4`; this is the copy of the file to be printed that was created by the `enq` command.

Flags used in the previous example are explained as follows:

- The `-A` flag specifies all queues.
- The `-L` flag specifies long form mode.
- The `-w` delay flag specifies that print status will be displayed, until all print jobs are done. The status will be displayed by updating the screen every five seconds (delay seconds).

3. To display the status for queue 4019ps, enter:

```
# qchk -P 4019ps
Queue   Dev   Status    Job Files               User         PP %   Blks Cp Rnk
------- ----- --------- --- ------------------ ---------- ---- -- ----- -- ---
4019ps  lp0   READY
#
```

In the previous command the `-P` queue flag specifies the queue (4019ps).

4. To display the status for job number 28, enter:

```
# qchk -# 28
Queue   Dev   Status    Job Files               User         PP %   Blks Cp Rnk
------- ----- --------- --- ------------------ ---------- ---- -- ----- -- ---
4019asc lp0   DEV_WAIT   28 install.ps          root@bob4            508   1   1
#
```

In the previous command the `-#` flag specifies the job number (28).

3.1.3 Holding and Releasing Jobs

Sometimes it is necessary to hold a print job rather than canceling it or keep changing its priority.

The `qhld` command holds and releases a spooled print job that is not being printed. The `qhld` command works on local queues only. Remote queues are not supported. You must have root authority, be a member of the printq group or be the print job owner to use this command. You can hold/release a spooled job through SMIT or the command line.

To use SMIT, type `smit qhld` at the command line.

Let's have an example using the `qhld` command. Let's first display how jobs are queued:

```
#qchk -A
Queue   Dev   Status    Job Files              User         PP %   Blks  Cp Rnk
------- ----- --------- --- ------------------ ---------- ---- -- ----- --- ---
4019asc lp0   RUNNING    39 smit.log           root         24  4   855   1   1
              QUEUED     40 figure1.ps         root                 224   1   2
              QUEUED     41 prprint.script     root                  27   1   3
4019gl  lp0   READY
4019pcl lp0   READY
4019ps  lp0   READY
```

To put job number 40 in HELD state enter:

```
# qhld -# 40
# qchk -A
Queue   Dev   Status    Job Files              User         PP %   Blks  Cp Rnk
------- ----- --------- --- ------------------ ---------- ---- -- ----- --- ---
4019asc lp0   RUNNING    39 smit.log           root         34  7   855   1   1
              HELD       40 figure1.ps         root                 224   1   2
              QUEUED     41 prprint.script     root                  27   1   3
4019gl  lp0   READY
4019pcl lp0   READY
4019ps  lp0   READY
```

In the previous command the `-#` flag specifies the job number (40) to be put in HELD state.

Notice that job number 41 is in rank position 3, after job number 40. Since job number 40 is in HELD state, job number 41 will be printed first:

```
# qchk -A
Queue   Dev   Status    Job Files              User         PP %   Blks  Cp Rnk
------- ----- --------- --- ------------------ ---------- ---- -- ----- --- ---
4019asc lp0   RUNNING    41 prprint.script     root         11  5    27   1   1
              HELD       40 figure1.ps         root                 224   1   2
4019gl  lp0   READY
4019pcl lp0   READY
4019ps  lp0   READY
```

To release job number 40 enter:

```
# qhld -r -# 40
# qchk -A
Queue   Dev   Status    Job Files              User         PP %   Blks  Cp Rnk
------- ----- --------- --- ------------------ ---------- ---- -- ----- --- ---
4019asc lp0   RUNNING    41 prprint.script     root         11  5    27   1   1
              QUEUED     40 figure1.ps         root                224   1   2
4019gl  lp0   READY
4019pcl lp0   READY
4019ps  lp0   READY
```

Notice that releasing job number 40 has changed its state from HELD to QUEUED. If job number 40 was in rank position 1 its state was going to change from HELD to RUNNING.

In the previous command:

- The `-r` flag specifies release the job
- The `-#` flag specifies the job number to be released

3.1.4 Moving Jobs between Queues

Imagine a situation when you have two queues that have the same printing capabilities. The first queue has many print jobs enqueued, the second one is idle, without any print requests.

In a situation like this it would be nice to move some print jobs from the first queue to the second one. The `qmov` command moves jobs between queues by specifying the destination queue and:

- The job number
- The queue name containing all the jobs you want to move
- The user whose jobs you want to move

To use SMIT, use the `smit qmov` command.

Let's show an example using the `qmov` command. The situation before moving print jobs is:

```
qchk -A
Queue   Dev   Status    Job Files              User         PP %   Blks  Cp Rnk
------- ----- --------- --- ------------------ ---------- ---- -- ----- --- ---
4019asc lp0   DEV_WAIT   40 figure1.ps         root                224   1   1
              QUEUED     44 screen.ps          root                224   1   2
              QUEUED     45 inst.ps            root                224   1   3
              QUEUED     46 example.ps         root                224   1   4
4019gl  lp0   READY
4019pcl lp0   READY
4019ps  lp0   READY
```

As you can see from the previous screen, we have four jobs in the 4019ascii queue. Since they are PostScripts files, let's move print job 46 to the 4019ps queue.

```
# qmov -m 4019ps -# 46
# qchk -A
Queue   Dev   Status    Job Files              User         PP %   Blks  Cp Rnk
------- ----- --------- --- ------------------ ---------- ---- -- ----- --- ---
4019asc lp0   DEV_WAIT   40 figure1.ps         root                224   1   1
              QUEUED     44 screen.ps          root                224   1   2
              QUEUED     45 inst.ps            root                224   1   3
4019gl  lp0   READY
4019pcl lp0   READY
4019ps  lp0   DEV_BUSY   46 example.ps         root                224   1   1
```

In the previous qmov command:

- The -m flag specifies the destination queue
- The -# flag specifies the job number to be moved

What about moving all print jobs from 4019ascii queue to the 4019ps queue?

```
# qmov -m 4019ps -P 4019ascii # qchk -A
Queue   Dev   Status    Job Files              User         PP %   Blks  Cp Rnk
------- ----- --------- --- ------------------ ---------- ---- -- ----- --- ---
4019asc lp0   DEV_WAIT   40 figure1.ps         root                224   1   1
4019gl  lp0   READY
4019pcl lp0   READY
4019ps  lp0   DEV_BUSY   46 example.ps         root                224   1   1
              QUEUED     44 screen.ps          root                224   1   2
              QUEUED     45 inst.ps            root                224   1   3
```

As you can see, all jobs except job in rank position 1 has been moved from 4019ascii to the 4019ps queue, as expected.

In the previous command:

- The -m flag specifies the destination queue
- The -P flag specifies the origin queue of the jobs to be moved

3.1.5 Prioritizing Jobs in a Print Queue

Sometimes users may want things done in a hurry, and may not wish to wait their turn to get hard copies of information. When this is the case and there are several large jobs queued, you may wish to change the priority of a job.

The qpri command prioritizes a job in a print queue by specifying the job number and giving it a priority number. The qpri command works only on local print jobs. Remote print jobs are not supported. After a job has been sent to a remote host, that host can change the job's priority, but the sender cannot. You must have root user authority, or belong to either the system group or printq group to run this command.

To use SMIT, use the smit qpri command.

Let's show an example using the qpri command. Before changing the priority of a job, let's display the current job priorities:

```
# qchk -L
 Queue   Dev   Status    Job     Name           From           To
                          Submitted        Rnk Pri       Blks  Cp          PP %
 ------- ----- --------- ---------        --- ---      ----- ---        ---- --
 4019asc lp0   DEV_WAIT   28     install.ps     root@bob4      root@bob4
                        11/12/94 12:51:56    1  15        508   1

                               /var/spool/lpd/dfA009bob4
               QUEUED     27     inst.ps        root           root
                        11/12/94 12:29:20    2  15        224   1

                               //inst.ps
               QUEUED     30     figure1.ps     root           root
                        11/12/94 15:58:35    3  15        224   1

                               /var/spool/qdaemon/ts5gdWa
```

Notice that each job has the same priority (15); however, the rank that they are to be printed is displayed as 1 through 3.

To change job number 30 to priority number 18, enter:

```
# qpri -# 30 -a 18
# qchk -L
 Queue   Dev   Status    Job     Name           From           To
                          Submitted        Rnk Pri       Blks  Cp          PP %
 ------- ----- --------- ---------        --- ---      ----- ---        ---- --
 4019asc lp0   DEV_WAIT   28     install.ps     root@bob4      root@bob4
                        11/12/94 12:51:56    1  15        508   1

                               /var/spool/lpd/dfA009bob4
               QUEUED     30     figure1.ps     root           root
                        11/12/94 15:58:35    2  18        224   1

                               /var/spool/qdaemon/ts5gdWa
               QUEUED     27     inst.ps        root           root
                        11/12/94 12:29:20    3  15        224   1

                               //inst.ps
```

Notice that the job with the status of DEV_WAIT could not be bumped down in priority. Giving job number 30 a priority of 18 has moved it from rank position 3 to rank position 2. Notice that the new priority number is also displayed. The higher the priority, the higher the rank (1 being the highest, and generally the job that is running or waiting for the device to become ready or a response from the operator). In this example, we changed the priority of job number 30 and then verified that the priority and the rank had been changed.

In the previous `qpri` command:

- The `-#` flag specifies the Job Number on which to change priority (30)
- The `-a` flag specifies the Priority Number to be assigned (18)

3.1.6 Canceling Jobs in a Print Queue

It is sometimes necessary to remove jobs from the print queue. You may find this to be the case when an extremely large file has been sent to the queue in error, and the printer resource would be tied up unnecessarily. It is possible to continuously change the priority on the specific job, but a more effective way to address this problem is to remove the job from the queue. This may be accomplished using the `cancel`, `lprm` or `qcan` commands. Note that we will not discuss the System V `cancel` command or the BSD `lprm` command in this section. Be aware that when jobs are canceled the keyboard will beep, and a message is sent notifying the user that the job has been canceled

3.1.6.1 Canceling a Print Job Using qcan

The `qcan` command cancels either a particular job number or all jobs in a print queue.

To use SMIT, use the `smit qcan` command.

Examples using the qcan command:

1. To cancel all jobs queued on `4019ascii` queue, enter:

```
# qchk -A
Queue   Dev   Status    Job Files              User         PP %   Blks  Cp Rnk
------- ----- --------- --- ------------------ ---------- ---- -- ----- --- ---
4019asc lp0   DEV_WAIT   28 install.ps         root@bob4            508   1   1
              QUEUED     30 figure1.ps         root                 224   1   2
              HELD       27 inst.ps            root                 224   1   3
4019gl  lp0   READY
4019pcl lp0   READY
4019ps  lp0   READY
              HELD       22 prprint.script     root                  27   1   1
              HELD       26 /inst.ps           root                 224   1   2
# qcan -X -P 4019ascii
# qchk -A
Queue   Dev   Status    Job Files              User         PP %   Blks  Cp Rnk
------- ----- --------- --- ------------------ ---------- ---- -- ----- --- ---
4019asc lp0   READY
4019gl  lp0   READY
4019pcl lp0   READY
4019ps  lp0   READY
              HELD       22 prprint.script     root                  27   1   1
              HELD       26 /inst.ps           root                 224   1   2
#
```

In this example:

- The status of the queues was displayed
- Jobs for the print queue 4019ascii were canceled
- The status was again displayed to verify that the jobs were canceled

Notice that only the jobs for the queue 4019ps remain.

In the previous `qcan` command:

- The `-P` printer flag specifies the printer name in which to cancel all jobs.
- The `-X` flag cancels all jobs for the specified queue. If you have root user authority, all jobs on that queue are deleted. If you do not have root user authority, only those jobs submitted by you will be canceled. This flag is only valid for local print jobs.

2. To cancel job number 22 on whatever printer the job is on, enter:

```
# qcan -x 22
# qchk -A
Queue   Dev   Status    Job Files              User         PP %   Blks  Cp Rnk
------- ----- --------- --- ------------------ ---------- ---- -- ----- --- ---
4019asc lp0   READY
4019gl  lp0   READY
4019pcl lp0   READY
4019ps  lp0   READY
              HELD       26 /inst.ps           root                224   1   2
```

In this example, job number 22 was canceled and then cancelation verified.

In the previous `qcan` command the `-x # job` flag specifies that only the specified job number be canceled (22).

3.1.7 The enq Command

The series of commands that have just been discussed: `qprt`, `qchk`, `qhld`, `qmov`, `qpri`, and `qcan` are actually frontends to the `enq` command. You can therefore do everything that you can do with these commands via the `enq` command. The `enq` command is also frontended by the `qadm` command, which performs print spooling subsystem management tasks and is discussed in Chapter 4, “Further Print Spooling Subsystem Configuration” on page 45.

The `enq` command and its options are described in detail in the *AIX Version 4.1 Commands References* (SBOF-1851).

3.1.8 The qprt Command

AIX's most full function printing command is `qprt`. With this command the user can customize each individual print command in much the same way as the virtual printer can be modified. The flags for `qprt` are direct matches for the flag attributes of the virtual printer and can easily make temporary changes for the single print job to these attributes.

Examples of printer variables that are easy to change are page width (-w92), page length (-l66), printer pitch (-p12), rotation (-z1), type style (-sitalics), and don't send final form feed (-Z!). form feed. A complete listing of the flags is easily obtained by typing `man qprt`.

Chapter 4. Further Print Spooling Subsystem Configuration

As you have seen from our previous discussion there are a number of components that make up the print spooling subsystem. To configure the print spooling subsystem to meet specific requirements that you may have, there are several key files and utilities. This section discusses how to use those files and utilities to modify the print spooling subsystem as required. The following topics will be discussed:

- Configuring and managing print queues
- Configuring and managing print queue devices
- Configuring and managing printer devices
- Configuring and managing virtual printers

4.1 A Technical Overview of Print Queues and Queue Devices

4.1.1 The qconfig File

The qconfig file is used by the print spooling subsystem to control configuration of the print queues themselves and the backend print queue devices that will process the enqueued jobs. The qconfig file contains stanzas that describe the characteristics of the printer spool queues and the backend devices that they invoke. Some examples of these stanzas are explained below. There is one important aspect of the qconfig file that should be understood. This is, the manner in which the configuration information is accessed by the `enq` command or the qdaemon. This relationship is summarized in Figure 14 on page 46 and the following paragraph.

In AIX V3.1 the qconfig file appeared in two directories. There was a /usr/lpd/qconfig and a /etc/qconfig file: which were linked to /usr/lpd/qconfig. In AIX V4.1 we only have the /etc/qconfig file. The /etc/qconfig file is in ASCII format but the commands that compose the print spooling subsystem actually use the /etc/qconfig binary version. The /etc/qconfig ASCII file is digested by the /usr/lpd/digest program to create a binary version called /etc/qconfig.bin. It is this digested binary version of the qconfig file that contains the configuration parameters that are used by programs such as enq or qdaemon. For simplicity we will refer to both versions of the qconfig file simply as the qconfig file.

The qconfig file is a flat ASCII attribute file in a stanza format. Stanzas in this file describe either queues or queue devices. Every queue stanza requires that one or more queue device stanzas immediately follow it in the file. The first queue stanza to appear in the qconfig file describes the default queue.

If the LPDEST environment variable is set, the `enq` command uses the queue name specified by the LPDEST variable. If set, this value is always used, even if the PRINTER variable is also set. If the PRINTER variable is set and no LPDEST variable is set, the `enq` command uses the queue name specified by the PRINTER environment variable. Any destination command-line options over-ride both the LPDEST and the PRINTER environment variables. If neither the LPDEST nor the PRINTER variable is set, the `enq` command uses the system default queue name.

© Copyright IBM Corp. 1991, 1994

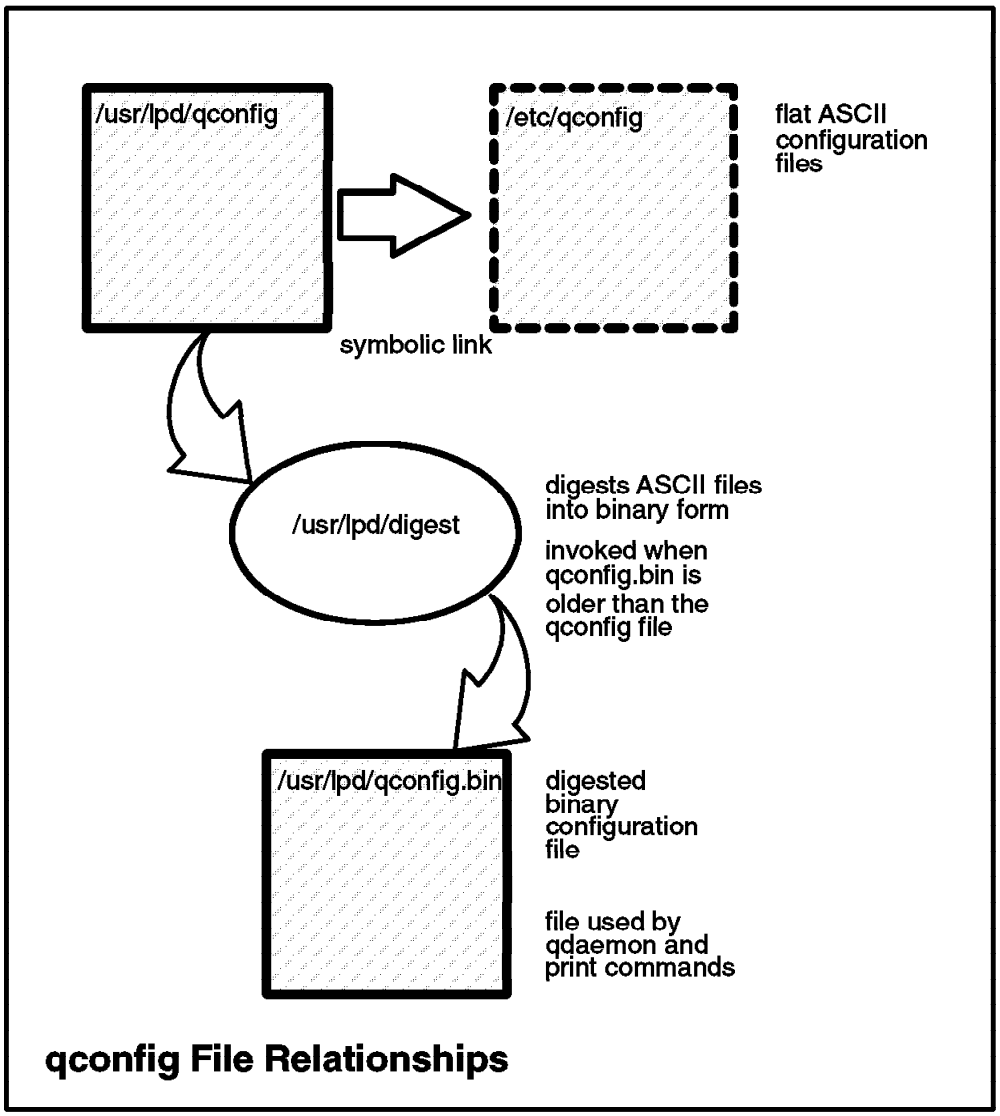

Figure 14. AIX V4.1 qconfig File Relationships

The system default queue name is the name of the first queue defined in the /etc/qconfig file. For example, to set these variables to lp0 for the Bourne and Korn shells, enter:

```
# export PRINTER=lp0
# export LPDEST=lp0
```

To set these variables for the csh shell, enter:

```
# setenv PRINTER=lp0
# setenv LPDEST=lp0
```

A caution, when one of these variable is set, a command like `cancel -x###`, a common method of canceling jobs will not find the job unless it is in the LPDEST queue.

4.1.1.1 The Queue Stanza in the qconfig File

The name of a queue stanza must be 1 to 7 characters long. The following table shows some key stanza field names along with some of the possible values that appear in a queue stanza; full description of the qconfig file and its options can be found in *AIX Version 4.1 Files Reference* (SC23-2512).

Table 2. Key Queue Stanza Fields in the qconfig File

Field Name	Explanation	Possible Value or Default	Explanation of Value
acctfile	Identifies the file used to save print accounting information.	FALSE	The default, FALSE, indicates suppress accounting. If the named file does not exist, no accounting is done.
device	Identifies the symbolic name that refers to the queue device stanza. This field must exist in the stanza.	For Example lp2 or laser	Refers to the queue device stanza name. This referenced stanza must be present in the qconfig file. The device stanza can be the same or different from the actual print device name.
discipline	Defines the queue serving algorithm.	fcfs	The default, fcfs, means first-come-first-served. The alternative is sjn or shortest job next.
up	Defines the state of the queue.	TRUE	The default, TRUE, indicates that the queue is running. FALSE indicates that it is not running.

If a field is omitted, its default value is assumed. The default values for a queue stanza are:

```
discipline =    fcfs
up         =    TRUE
acctfile   =    FALSE
```

Figure 15. Default Queue Stanza for /etc/qconfig

The device field should not be omitted. If this field is omitted, the system will create the field and assign the name dummy (No reflection on the administrator).

4.1.1.2 The Queue Device Stanza in the qconfig File

The name of a device stanza is arbitrary and can be 1 to 7 characters long. The fields that can appear in the stanza are:

Table 3. Field Name and Possible Values for qconfig Queue Device Stanzas

Field name	Default Value	Explanation
backend		Specifies the full path name of the backend, optionally followed by flags and parameters to be passed to it. The path names most commonly used are /usr/lpd/piobe for local print and /usr/lpd/rembak for remote print.
access	write	Specifies the type of access the backend has to the file specified by the file field. The value of access is write if the backend has write access to the file or both if it has both read and write access. This field is ignored if the file field has the value FALSE.
file	FALSE	Identifies the special file where the output of the backend program is to be redirected. Normally the full name of a printer device is used. (e.g. /dev/lp3). FALSE indicates no redirection, and that the file name is /dev/null.
header	NEVER	Specifies whether a header page prints before each job or group of jobs. NEVER indicates no header page at all. ALWAYS means a header page before each job. GROUP means a header before each group of jobs for the same user.
align	TRUE	Specifies whether the backend sends a form-feed control before starting the job if the printer was idle.
feed	NEVER	Specifies the number of separator pages to print when the device becomes idle. The default value, never, indicates that the backend is not to print separator pages.
trailer	NEVER	Specifies whether a trailer page prints after each job or group of jobs. NEVER means no trailer page at all. ALWAYS means a trailer page after each job. GROUP means a trailer page after each group of jobs for the same user.

The qdaemon program places the information contained in the feed, header, trailer, and align fields into a status file that is sent to the backend. Backends that do not update the status file do not use the information it contains. If a field is omitted, its default value is assumed. The backend field cannot be omitted.

4.1.1.3 Examples of Stanzas in the qconfig File

1. A print queue can be served by more than one printer at a time. The following stanza may be used to allow two jobs sent to the same queue to print at the same time.

```
lp0:
      discipline = fcfs
      device = lpd1,lpd2
lpd1:
      backend = /usr/lpd/piobe
      file = /dev/lp0
lpd2:
      backend = /usr/lpd/piobe
      file = /dev/tty0
```

Figure 16. qconfig Stanza to Allow Two Printers to be Served by a Single Queue

The main advantage of having two devices associated with a queue is that when a request is sent to a queue with only one associated device, no other request to that queue can be completed until the first request is done. This type of queue is sometimes referred to as freestanding. When there are two devices for the queue any print request sent to that queue will be printed on either device (/dev/lp0 or /dev/tty0) depending on which is available at the time the request is received by the system. You can direct a print job to a specific printer with a flag on the `qprt` command, for example `qprt -Plp0:lpd2`.

2. The default configuration for the print spooling subsystem in the AIX V3.1 had a single batch queue configured. In AIX V4.1 we do not have any queue configured but we still have the batch queue as an example in the qconfig file. The batch queue example for AIX V4.1 contains these stanzas:

```
bsh:
    device = bshdev
    discipline = fcfs
bshdev:
    backend = /bin/sh
```

Figure 17. Possible Batch Queue Configuration

The bsh stanza is the queue, and the bshdev stanza is the queue device stanza. To run a shell procedure called myproc using this batch queue, enter:

```
# qprt -Pbsh myproc
```

Where `myproc` is an executable file with the following line:

```
banner PRINTING  > /bsh.out
```

To see what is inside bsh.out type:

```
# cat /bsh.out
######  ######    ###   #     # #######   ###   #     #  #####
#     # #     #    #    ##    #    #       #    ##    # #     #
#     # #     #    #    # #   #    #       #    # #   # #
######  ######     #    #  #  #    #       #    #  #  # #  ####
#       #   #      #    #   # #    #       #    #   # # #     #
#       #    #     #    #    ##    #       #    #    ## #     #
#       #     #   ###   #     #    #      ###   #     #  #####
```

The qprt command in this example processes the file myproc using the queue (-P) bsh. The queuing system runs the files one at a time, in the order submitted. The qdaemon process redirects its standard input, standard output, and standard error to the /dev/null file. In the previous example we redirected the banner standard output to the bsh.out file, not the qdaemon process output.

If your organization has a fairly large system with many users, it may be prudent to have some programs (compilers for example) run as batch jobs. The requests to compile programs would each be placed in a queue and run on a first come first serve basis. This may not be acceptable for users in all instances, because they will have to wait their turn when compiling. The overall performance of the system would be improved and this may be a more significant advantage. If you have these types of requirements you may also wish to review section 5.5, “Using the Print Spooling Subsystem as a Generic Spooling Subsystem” on page 99.

When creating queues for your programmers, you should determine the maximum number of jobs that you wish to run at any given time and create stanzas similar to the one in the following example.

3. The following stanza may be used to allow two batch jobs (such as C compilation) to run at once:

```
bsh:
      discipline = fcfs
      device = bsh1,bsh2
bsh1:
      backend = /bin/ksh
bsh2:
      backend = /bin/ksh
```

Figure 18. Stanza to Allow Two Batch Job Streams

4.1.2 Administrative Privilege and the Print Spooling Subsystem

The print spooling subsystem is a part of the AIX V4.1 security regime. AIX V4.1 uses a system of administrative privilege to control access to many administrative areas such as the print spooling subsystem. The administrative privilege approach allows a systems administrator to delegate some authority to administer a portion of the AIX V4.1 environment without having to give a user the sweeping powers of the root user or system group. To configure the print spooling subsystem and perform many administrative tasks, a user must either be the root user, a member of the system group or a member of the printq administrative group. Users who are members of the printq administrative group can manipulate the print spooling subsystem but do not have access to other administrative privileges (such as

managing mail) unless those privileges are also given to them. The following table contrasts the functions that an administrator (that is a person with appropriate privilege) can perform, versus the functions that a typical user can perform.

Table 4. User v. Systems Administrator Use of Print Management Functions

Function	System Administrator	User
Start / Cancel Print Job	Yes	Yes *
Start / Stop Queue	Yes	No
Modify Print Queue	Yes	No
Prioritize Jobs	Yes (1-30)	Yes (1-20)
Query Queue Status	Yes	Yes
Schedule a Job	Yes	Yes *
Use Accounting Facilities	Yes	No

Note: * - User's own jobs only

4.2 Configuring and Managing Print Queues

There are many reasons that you may want to modify the print queues and queue devices in the qconfig file. You may wish to provide specific users or applications with specific queues; you may want special queues that are available only at certain times; you may want to track printer use of some users but not others. Given that you require modification of the print queue or queue device stanzas in the qconfig file, there are two major ways in which these files can be manipulated:

- The first is to edit the qconfig file directly, using the editor of your choice.
- The second is to use the facilities provided via AIX V4.1 and SMIT to configure print queues and queue devices. This is the recommended approach. The following sections discuss the facilities provided by AIX V4.1 to manipulate the qconfig file.

This section will describe how to perform the following print queue configuration and management tasks via the facilities provided by AIX V4.1:

- Adding a print queue
- Displaying print queue configuration information
- Modifying a print queue configuration
- Stopping and starting a print queue
- Removing a print queue

.

4.2.1 Adding a Print Queue

In AIX V3.1 we had to deal with four objects (queue, queue device, virtual printer and printer device) in contrast with AIX V4.1, where you only deal with a single object, the print queue. But none of these four objects have disappeared, they are hidden under the print queue object.

As you have seen in section 2.1.2, “Adding a Print Queue” on page 18, we have installed a 4019 printer and created one queue for each emulation mode this printer can emulate. All this under the Add a print queue menu, using the `smit mkpq` fastpath.

If you want to configure a print queue like in AIX V3.1 this can also be done using the `smit mkpq` command.

To configure a print queue (and queue device):

1. Enter the `smit mkpq` command. The following screen will be displayed:

```
                          Add a Print Queue

Move cursor to desired item and press Enter. Use arrow keys to scroll.

  # ATTACHMENT TYPE      DESCRIPTION
    local                Printer Attached to Local Host
    remote               Printer Attached to Remote Host
    xstation             Printer Attached to Xstation
    ascii                Printer Attached to ASCII Terminal
    hpJetDirect          Network Printer (HP JetDirect)
    file                 File (in /dev directory)
    other                User Defined Backend

F1=Help                 F2=Refresh              F3=Cancel
F8=Image                F10=Exit                Enter=Do
/=Find                  n=Find Next
```

2. In the previous screen select other User Defined Backend. You are presented with the following screen. Select the appropriate options and press Enter.

```
                                Add a Print Queue

Type or select values in entry fields.
Press Enter AFTER making all desired changes.

[TOP]                                                   [Entry Fields]
* Name of QUEUE to add                                 [p2]
* Name of QUEUE DEVICE to add                          [p2d]
* BACKEND PROGRAM pathname                             [/usr/lpd/piobe]
  ACTIVATE the queue?                                   yes                      +
  Should this become the DEFAULT queue?                 no                       +
  Queuing DISCIPLINE                                    first come first serve   +
  ACCOUNTING FILE pathname                              []                        /
  HOSTNAME of remote server                             []
  Name of QUEUE on remote server                        []
  Pathname of the SHORT FORM FILTER for queue           []                       +/
   status output
  Pathname of the LONG FORM FILTER for queue            []                       +/
   status output
  BACKEND OUTPUT FILE pathname                          [/dev/lp2]
[MORE...5]

F1=Help             F2=Refresh          F3=Cancel           F4=List
F5=Reset            F6=Command          F7=Edit             F8=Image
F9=Shell            F10=Exit            Enter=Do
```

Figure 19. Add a Print Queue Menu

In the previous screen, the following configuration options were selected:

- The queue name was selected as `p2`. This is the name that will identify the queue to the user and in the qconfig file.
- The queue device name of `p2d` was selected.
- The backend output device was selected as `/dev/lp2`. This identifies the device that backend will direct its output to.
- We have selected the default backend program, piobe.

3. SMIT will give you an OK message when it successfully completes the configuration of the queue and queue device:

```
                                COMMAND STATUS

Command: OK            stdout: yes           stderr: no

Before command completion, additional instructions may appear below.

Added queue 'p2'.
Added queue device 'p2d'.









F1=Help             F2=Refresh          F3=Cancel           F6=Command
F8=Image            F9=Shell            F10=Exit            /=Find
n=Find Next
```

You can verify that the new queue has been added by using the `qchk -A` command, the `lsallq` command or by looking at the contents of the qconfig file.

You can also add a print queue through the command line, but as we said before, using SMIT to add a print queue avoids you dealing with a queue and a queue device. You have to perform two steps to add a print queue through the command line:

1. Add a queue using the `mkque` command. For example, the following command will configure a remote queue. It configures just the queue and not the queue device.

```
# mkque -qlp -a 'host = joyner' -a 'rq = lp013'
#
```

   - The `-q` flag specifies the name of the queue to be added (lp).
   - The `-a` flag specifies a line to be added to the queue stanza in the qconfig file (`host = joyner` and `rq = lp013`). These flags must be last when entering the mkque command on the command line.

2. Add a queue device associated with the queue you have added, using the `mkquedev` command. That is, for the queue we have added in the previous example, the following command will add a device named `lpdev` that has `/usr/lib/lpd/rembak` as its backend.

```
# mkquedev -qlp -dlpdev -a 'backend = usr/lib/lpd/rembak'
```

   - The `-q` flag specifies the name of the queue (this name must already exist) to which the queue device is added. The `mkquedev` command automatically adds the `device =` attribute to the specified queue stanza.

- The -a flag specifies the attribute to be added to the device stanza in the /etc/qconfig file (backend = usr/lib/lpd/remback).

4.2.2 Displaying Print Queue Configuration Information

Once printers have been established you may wish to interrogate their configuration. This section will describe how this can be accomplished using the lsallq and lsque commands.

- **Displaying Names of All Configured Queues Using lsallq**

  The lsallq command lists the names of all configured queues contained in the /etc/qconfig file. By specifying the -c flag, this listing is displayed in colon format.

  To use SMIT, enter smit lsallq.

  Examples

  1. To list all of the queue names in the /etc/qconfig file enter:

```
# lsallq
4019ascii
4019gl
4019pcl
4019ps
p2
lp
```

  2. To list all configured queues in colon format, enter:

```
# lsallq -c
4019ascii
4019ascii:lp0
4019gl
4019gl:lp0
4019pcl
4019pcl:lp0
4019ps
4019ps:lp0
p2
p2:p2d
lp
lp:lpdev
#
```

     Notice that in the previous listing, no device is associated with the lp queue. This is because when the queue was created no device was specified. The name before the colon is the queue name and the one after the colon is the queue device name.

- **Displaying a Queue Stanza Name - the lsque Command**

  The lsque command lists details of the queue and queue device configurations that are stored in the qconfig file.

  Examples

  1. In section 4.2.1, “Adding a Print Queue” on page 52, the mkque and the mkquedev commands were used to create a print queue. To display a queue stanza (lp), enter:

```
# lsque -q lp
lp:
  device = lpdev
  host = joyner
  rq = lp013
#
```

The `-q` flag specifies the name of the queue stanza.

2. To display queue stanza lp in colon format, enter:

```
# lsque -c -q lp
#name:device:discipline:up:acctfile:host:s_statfilter:l_statfilter:rq
lp:lpdev:fcfs:TRUE:FALSE:joyner:::lp013
#
```

When the `-c` flag is used, the data is displayed in colon format.

This method of displaying queue data is useful because the colons may be used as field separators, when using the output from this command in a shell script.

4.2.3 Modifying a Print Queue Configuration

After print queues have been added, it is sometimes necessary to change the information associated with the various attributes or add attributes that were not specified in the original configuration.

The `smit chque` command changes the print queue information by changing the stanza in the qconfig file. Within that stanza, each attribute that matches one of the Attribute = Value pairs passed by SMIT will be replaced by the one entered by SMIT. If no match is found, the Attribute = Value pair is added to the end of the stanza. The device attribute cannot be changed using this command.

To use SMIT, enter:

```
# smit chque
```

After entering the command, the following screen is displayed:

```
                         Print Queue to Change / Show

Type or select a value for the entry field.
Press Enter AFTER making all desired changes.

                                                        [Entry Fields]
* PRINT QUEUE name                                    []                      +

F1=Help             F2=Refresh          F3=Cancel           F4=List
F5=Reset            F6=Command          F7=Edit             F8=Image
F9=Shell            F10=Exit            Enter=Do
```

In the previous screen select the print queue to be changed. Press F4 to see a list of available print queues. In this example the following screen is displayed after pressing F4:

```
                         Print Queue to Change / Show

Type or select a value for the entry field.
Press Enter AFTER making all desired changes.

                                                        [Entry Fields]
* PRINT QUEUE name                                    []                      +


   ____________________________________________________________________________
   |                            PRINT QUEUE name                                |
   |                                                                            |
   | Move cursor to desired item and press Enter. Use arrow keys to scroll.     |
   |                                                                            |
   |   # PRINT QUEUE                DESCRIPTION                                 |
   |     4019ascii                  ibm4019 (ASCII)                             |
   |     4019gl                     ibm4019 (GL Emulation)                      |
   |     4019pcl                    ibm4019 (PCL Emulation)                     |
   |     4019ps                     ibm4019 (PostScript)                        |
   |     p2                                                                     |
   |     lp                                                                     |
   |                                                                            |
   | F1=Help                 F2=Refresh              F3=Cancel                  |
F1 | F8=Image                F10=Exit                Enter=Do                   |
F5 | /=Find                  n=Find Next                                        |
F9 |____________________________________________________________________________|
```

In our example `p2` print queue is selected. After the selection has been entered, the following screen is displayed:

```
                         Print Queue to Change / Show

Type or select a value for the entry field.
Press Enter AFTER making all desired changes.

                                                        [Entry Fields]
* PRINT QUEUE name                                    [p2]                    +

  ___________________________________________________________________________
  |                    Characteristic to Change / Show                        |
  |                                                                           |
  | Move cursor to desired item and press Enter.                              |
  |                                                                           |
  |   1 Queue Characteristics                                                 |
  |   2 Queue Device Characteristics                                          |
  |                                                                           |
  | F1=Help                 F2=Refresh              F3=Cancel                 |
F1| F8=Image                F10=Exit                Enter=Do                  |
F5| /=Find                  n=Find Next                                       |
F9|___________________________________________________________________________|
```

Select if you are modifying the queue characteristics or the queue device characteristics. In our example we have selected to modify the queue characteristics. The following screen is displayed:

```
                    Change / Show Characteristics of a Queue

Type or select values in entry fields.
Press Enter AFTER making all desired changes.

                                                        [Entry Fields]
  Name of queue                                        p2
  ACTIVATE the queue?                                  yes                    +
  Queuing DISCIPLINE                                   first come first serve  +
  ACCOUNTING FILE pathname                            [FALSE]                  /
  HOSTNAME of remote server                           []
  Name of QUEUE on remote server                      []
  Pathname of the SHORT FORM FILTER for queue         []                      +/
   status output
  Pathname of the LONG FORM FILTER for queue          []                      +/
   status output

F1=Help             F2=Refresh          F3=Cancel           F4=List
F5=Reset            F6=Command          F7=Edit             F8=Image
F9=Shell            F10=Exit            Enter=Do
```

Figure 20. SMIT chque Screen

When the previous screen appears, type in the appropriate changes and press Enter. When entered, the changes immediately take effect.

4.2.4 Stopping and Starting a Print Queue

When a printer is not functioning properly, you may wish to take that printer offline. This may be accomplished by using either the AIX V4.1 `qadm` or `enq` commands. The `qadm` command is a frontend to the `enq` command and we will therefore not discuss the `enq` command here.

4.2.4.1 Administering Printing Using the qadm Command

The `qadm` command brings printers, queues, and the spooling system up or down (makes printers available or unavailable) and cancels jobs. The `qadm` command can affect only local print jobs. You must also have root user authority, or belong to either the system group or printq group, to run this command.

You can use the SMIT interface to run this command.

To do so, enter `smit spooler`.

Examples

1. To cancel all of your jobs on printer lp0 (or all jobs on printer lp0, if you have root user authority) enter:

```
# qchk
Queue   Dev   Status    Job Files               User         PP %   Blks Cp Rnk
------- ----- --------- --- ------------------- ---------- ---- -- ----- -- ---
4019asc lp0   RUNNING    49 test1.script        root          1  0     1  1   1
              QUEUED     50 test2.script        root                1  1   2
              QUEUED     51 test3.script        root                1  1   3
# qadm -X 4019ascii
# qchk
Queue   Dev   Status    Job Files               User         PP %   Blks Cp Rnk
------- ----- --------- --- ------------------- ---------- ---- -- ----- -- ---
4019asc lp0   READY
#
```

Figure 21. Canceling All Jobs on a Queue - Using qadm

The `-X` cancels the printing of user's jobs on the specified queue (4019ascii). If you have root user privileges, all jobs on that queue are deleted.

2. To bring down 4019ascii queue, enter:

```
# qadm -D 4019ascii
# qchk
Queue   Dev   Status    Job Files               User         PP %   Blks Cp Rnk
------- ----- --------- --- ------------------- ---------- ---- -- ----- -- ---
4019asc lp0   DOWN
```

Figure 22. Bringing Down Queues - Using qadm

3. To bring up 4019ascii queue, enter:

```
# qadm -U 4019ascii
# qchk
Queue   Dev   Status    Job Files               User         PP %   Blks Cp Rnk
------- ----- --------- --- ------------------ ---------- ---- -- ----- -- ---
4019asc lp0   READY
```

Figure 23. Bringing Up Queues - Using qadm

4.2.5 Removing a Print Queue - the rmque Command

You may need to remove a print queue from time to time. The `rmque` command is provided for this purpose.

The `rmque` command removes a queue from the system configuration by deleting the named queue stanza. All queue devices must be deleted using the `rmquedev` command before using `rmque`. The process for removing print queue devices is detailed in section 4.3.4, “Removing a Queue Device” on page 67.

To remove print queue lp0, enter:

```
# lsallqdev -q p2
p2d
# rmque -q p2
rmque: (FATAL ERROR): 0781-183 Cannot delete p2: Queue contains devices.
# rmquedev -q p2 -d p2d
# lsallqdev -q p2
# lsallq
4019ascii
4019gl
4019pcl
4019ps
p2
lp
# rmque -q p2
# lsallq
4019ascii
4019gl
4019pcl
4019ps
lp
#
```

Figure 24. Removing a Specified Queue - Using rmque

Here is what the previous screen displays:

- The first command displayed all queue devices for the p2 queue (p2d)
- Next we attempted to remove the print queue using `rmque` and received an error that indicated that the queue could not be deleted because there were associated queue devices still existing
- We then used the `rmquedev` command to remove the queue device (p2d)
- Next, by using the `lsallqdev` command, we verified that the queue devices for the p2 queue were deleted

- To show that the `rmquedev` command only removed the queue devices and not the queue, we displayed all queues using the `lsallq` command
- We then used `rmque` again to remove the queue
- Last, we verified that the queue had been removed

You may also use SMIT to run this command. Using SMIT is a lot easier because you only deal with the print queue itself. If the print queue has any device associated with it, SMIT automatically removes them for you. If you have many print queues associated with the same device, and you want to remove all the queues, SMIT removes for you all the queues without removing the queue device, except for the last print queue, when SMIT removes the queue and its associated device.

To use SMIT, enter `smit rmque`.

4.3 Configuring and Managing Print Queue Devices

In section 2.1.2, “Adding a Print Queue” on page 18, we configured a queue, queue device and virtual printer in one process. In section 4.2, “Configuring and Managing Print Queues” on page 51 we discussed the configuration of print queues. We can also configure queue devices separately. This section will describe how to perform the following queue device administrative tasks:

- Adding a queue device
- Displaying queue device configuration information
- Modifying a queue device
- Removing a queue device

4.3.1 Adding a Queue Device

The `mkquedev` command adds new queue devices to existing print queues. Using the command line interface to create queue devices is a bit cumbersome; therefore, it will not be detailed in this document.

Adding a new queue device in AIX V4.1 is something different from AIX V3.1. Since in AIX V4.1 the queue device object is hidden under the print queue object, adding a queue device is just like adding a new printer, but attached to an existing print queue. In the following example we will use SMIT to add a new printer (queue device) to an existing print queue:

To use SMIT enter `smit mkpqprt`:

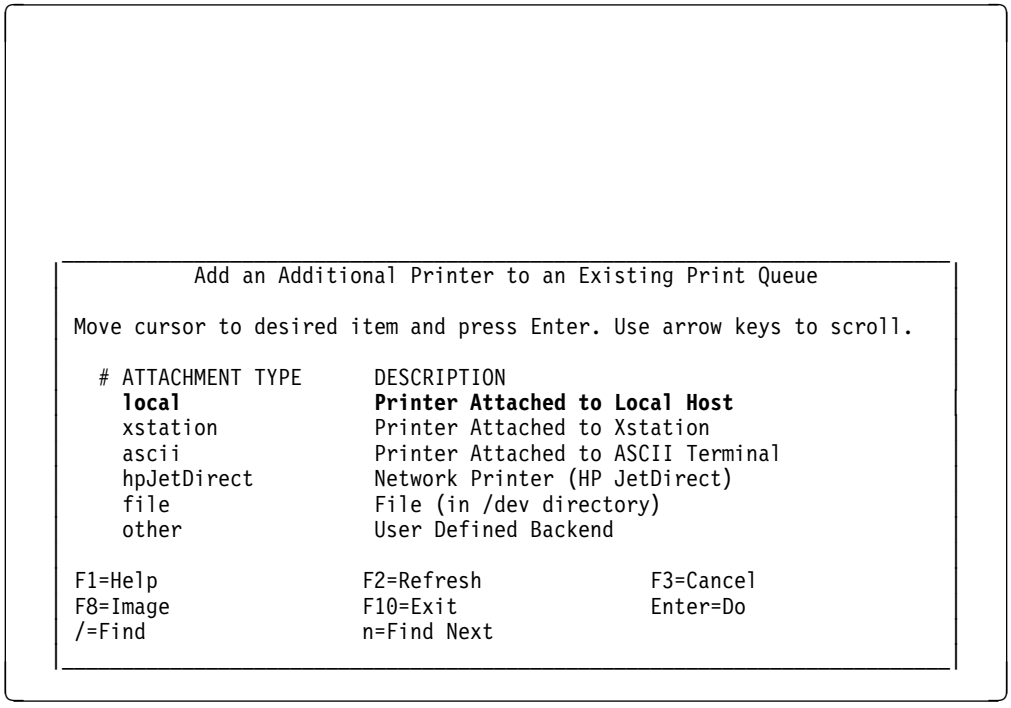

Figure 25. Creating a Queue Device under AIX V4.1

In the previous screen choose the attachment type for your printer. In our example we are attaching the printer to the local host, so we have selected the `local` option.
.

The following screen is displayed:

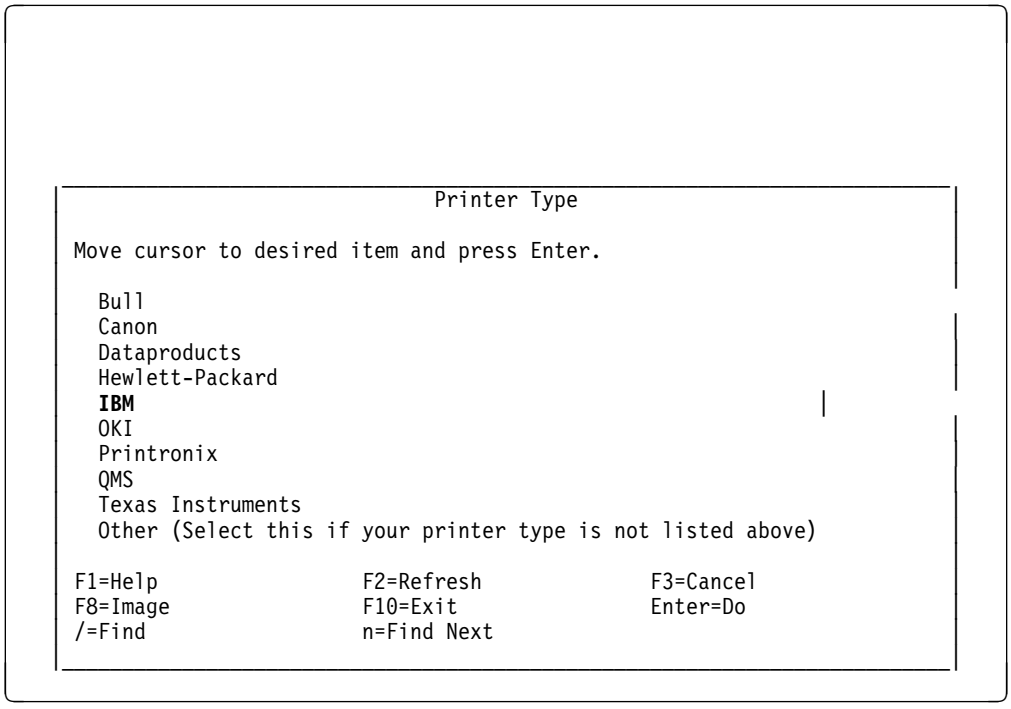

In the previous screen select the brand of your printer. In our example we are installing an IBM 4039 printer, so we have selected `IBM`. The following screen is displayed:

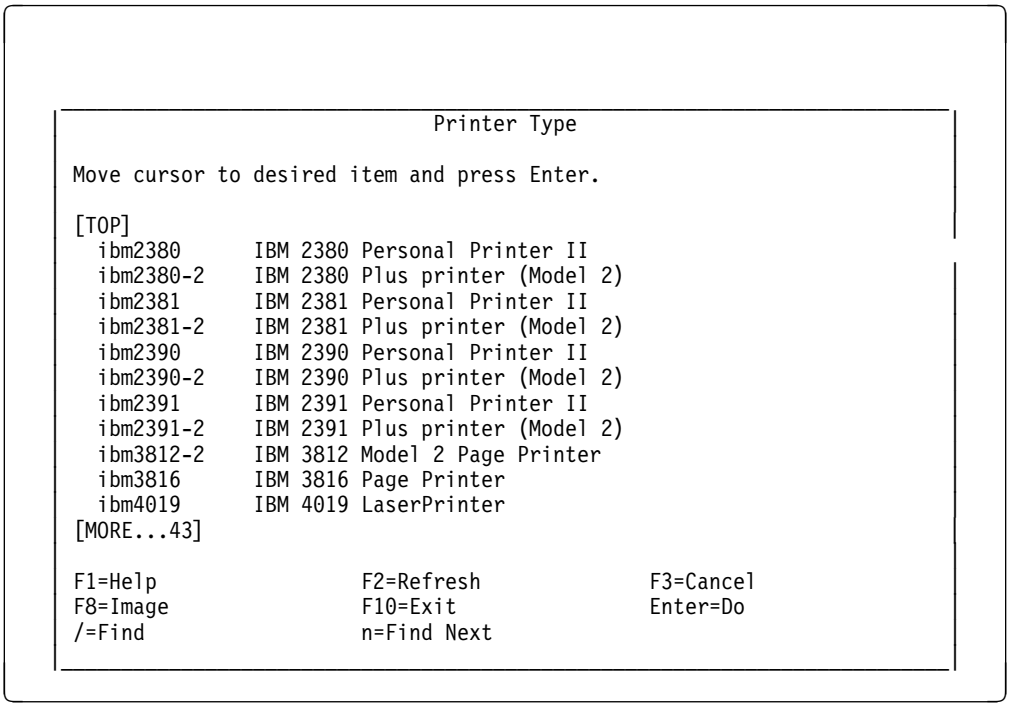

In the previous screen select the printer model. In our example we have selected the `IBM 4039 LaserPrinter` model. A screen like the following will be displayed:

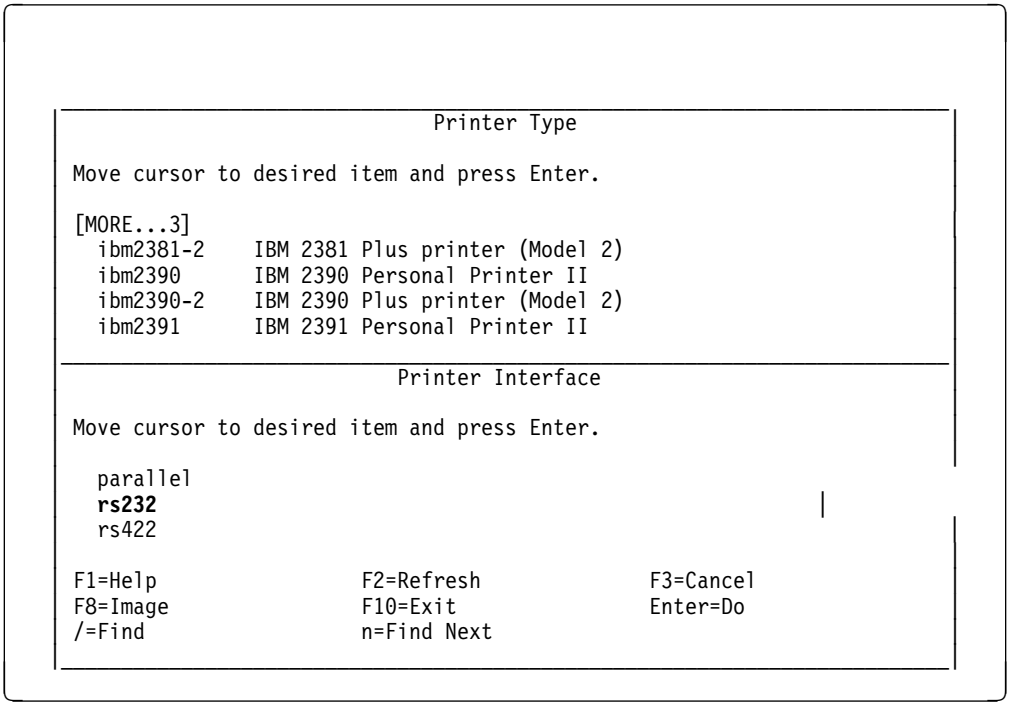

In the previous screen select your printer interface type. In our example we have selected the `rs232` interface. A screen like the following will be displayed:

```
                              Printer Type

Move cursor to desired item and press Enter.

[MORE...3]
  ibm2381-2    IBM 2381 Plus printer (Model 2)
  ibm2390      IBM 2390 Personal Printer II
  ibm2390-2    IBM 2390 Plus printer (Model 2)
  ibm2391      IBM 2391 Personal Printer II
```

```
                             Parent Adapter

Move cursor to desired item and press Enter.

  sa0 Available 00-00-S1 Standard I/O Serial Port 1
  sa1 Available 00-00-S2 Standard I/O Serial Port 2

F1=Help                 F2=Refresh              F3=Cancel
F8=Image                F10=Exit                Enter=Do
/=Find                  n=Find Next
```

In the previous screen select the parent adapter for you printer interface. In our exmple we have selected the `sa0 Available 00-00-S1 Standard I/O Serial Port 1`. A screen like the following is displayed:

```
             Add an Additional Printer to an Existing Print Queue

Type or select values in entry fields.
Press Enter AFTER making all desired changes.

                                                    [Entry Fields]
  Description                                      IBM 4039 LaserPrinter

* Name of existing PRINT QUEUE                     []                      +
* Printer LANGUAGE                                                        +

  Printer connection characteristics
*    PORT number                                   [s1]                    +
     BAUD rate                                     [9600]                  +
     PARITY                                        [none]                  +
     BITS per character                            [8]                     +
     Number of STOP BITS                           [1]                     +
     FLOW CONTROL to be used                       [dtr]                   +
     Printer TIME OUT period (seconds)             [300]                   +#
     STATE to be configured at boot time            available              +

F1=Help             F2=Refresh          F3=Cancel           F4=List
F5=Reset            F6=Command          F7=Edit             F8=Image
F9=Shell            F10=Exit            Enter=Do
```

In the previous screen, in the `Name of existing PRINT QUEUE` field type the name of the existing print queue to which you are attaching you new printer or press F4 to see a list of available print queues. Also make a selection of the printer language for the selected print queue. In our example we have selected `4019ps` as the print

queue and ps as the printer language. If you are successful a screen like the following will be displayed:

```
                                COMMAND STATUS

Command: OK            stdout: yes           stderr: no

Before command completion, additional instructions may appear below.

Added printer 'lp1'.

Added printer 'lp1' to print queue '4019ps'.









F1=Help             F2=Refresh          F3=Cancel           F6=Command
F8=Image            F9=Shell            F10=Exit            /=Find
```

4.3.2 Displaying a Queue Device Configuration Information

When a printer is physically functional, and the queue is configured properly, yet jobs are still not being printed you may then want to display the queue device information. If the queue device is not shown in the list or the configuration is not correct, it may have been deleted or modified in error. There are several commands which allow you to list queue devices. This section will describe how it is done using the lsquedev and lsallqdev commands:

- **Displaying the Queue Device Stanza Information Using lsquedev**

  The lsquedev command displays the name of the queue stanza and associated attributes.

  Examples:

  1. To display the lp0 device stanza on the 4019ascii queue, enter:

```
# lsquedev -q4019ascii -dlp0
lp0:
    file = /dev/lp0
    header = never
    trailer = never
    access = both
    backend = /usr/lib/lpd/piobe
```

The -d flag specifies the name of the device stanza that is displayed (lp0).

The -q flag specifies the name of the queue containing the device stanza that is displayed (4019ascii).

2. To display the lp0 device stanza on the 4019ascii queue in colon format, enter:

```
# lsquedev -c -q 4019ascii -d lp0
#name:file:access:feed:header:trailer:backend:align
lp0:/dev/lp0:both:never:never:never:/usr/lib/lpd/piobe:FALSE
```

As displayed, when the -c flag is used, the data is displayed in colon format. This format is useful if you wish to use the output of this command in shell scripts of SMIT discover strings.

- **Listing All Configured Printer/Plotter Devices for a Queue**

  The lsallqdev command lists all configured device names
  file. within a specified queue in the /etc/qconfig file.

  Examples:

  1. To list the names of all the configured queue devices within the 4019ascii queue in the /etc/qconfig file, enter:

```
# lsallqdev -q 4019ascii
lp0
```

The -q flag specifies the queue name (4019ascii).

2. To list the names of all of the configured queue device within the 4019ascii queue in the /etc/qconfig file in colon format, enter:

```
# lsallqdev -q 4019ascii -c
4019ascii:lp0
```

The -c flag causes colon format output for use by SMIT.

4.3.3 Modifying a Queue Device

After queue devices have been added, it is sometimes necessary to change the information associated with the various attributes or add attributes that were not specified in the original configuration. These tasks may be accomplished using the chquedev command.

To change the lp0 device stanza on the 4019ascii queue to contain the line header = always, enter:

```
# lsquedev -q 4019ascii -d lp0
lp0:
        file = /dev/lp0
        header = never
        trailer = never
        access = both
        backend = /usr/lib/lpd/piobe
# chquedev -q4019ascii -d dlp0 -a'header = always'
# lsquedev -q 4019ascii -d dlp0
lp0:
        file = /dev/lp0
        header = always
        trailer = never
        access = both
        backend = /usr/lib/lpd/piobe
#
```

In this example, the current stanza for the queue device was displayed; it was then modified, and then re-displayed to verify that modifications were made.

The `-a` flag specifies the stanza lines to be changed (header = always).

The `-d` flag specifies the device name in the queue to be changed (lp0).

The `-q` flag specifies the queue name in which to change nza (4019ascii).

4.3.4 Removing a Queue Device

When it becomes necessary to remove a queue device, the `rmquedev` command may be used. The `rmquedev` command removes a printer or plotter queue device from the system configuration by deleting the named queue device stanza.

To delete the lp0 device stanza and modify the queue device stanza in the 4019ascii queue stanza, enter:

```
# lsallqdev -q4019ascii
lp0
# rmquedev -q 4019ascii -d lp0
# lsallqdev -q4019ascii
#
```

In this example, all devices for the 4019ascii queue were listed. Device lp0 was removed and then verified.

The `-q` flag specifies the name of the queue stanza (4019ascii), which device stanza is to be modified in the qconfig file.

The `-d` flag specifies the name of the device stanza to be deleted in the qconfig file (lp0).

4.4 Configuring and Managing Printer Devices

In section 1.1.2, “Printing via the Printer Device Driver” on page 5, the printer device and its role in the print spooling subsystem was discussed. In AIX V4.1 the printer device drive is automatically installed when you add a print queue. This section focuses on how the printer device may be further configured. AIX V4.1 provides facilities to perform the following tasks related to printer devices:

- Displaying the settings of the printer device
- Temporarily changing the settings of the printer device
- Permanently changing the settings of the printer device
- Moving the printer device to different communications port
- Removing a printer device

4.4.1 Displaying Printer Device Settings

4.4.1.1 Displaying Printer Device Settings with the smit chgprt Command

The `smit chgprt` command can be used to display or change printer device settings via a SMIT dialogue. To display the status of a printer:

1. Enter `smit chgprt`.
2. You will be presented with a list of printers to be displayed or modified.

   Select the printer of interest.
3. You are presented with a summary of printer device settings that you may modify.

   You may now review or modify the settings using the standard facilities of SMIT.

4.4.1.2 Displaying Printer Device Settings with the splp Command

To display the current printer settings for the /dev/lp0 printer (the default), enter:

```
# splp

device = /dev/lp0      (+ yes     ! no)
CURRENT FORMATTING PARAMETERS (ignored by qprt, lpr, and lp commands)
Note: -p + causes the other formatting parameters to be ignored.
-p !    pass-through?                   -c +    send carriage returns?
-l 66   page length (lines)             -n +    send line feeds?
-w 80   page width (columns)            -r +    carriage rtn after line feed?
-i 0    indentation (columns)           -t !    suppress tab expansion?
-W !    wrap long lines?                -b +    send backspaces?
-C !    convert to upper case?          -f +    send form feeds?
CURRENT ERROR PROCESSING PARAMETERS
-T 600  timeout value (seconds)         -e !    return on error?
#
```

Figure 26. Display Current Printer Settings for Printer lp0 Using splp

4.4.1.3 Displaying Printer Device Settings with the lsattr Cammand

The `lsattr` command displays information about the attributes of a given device or kind of device. The `lsattr` command is a general AIX V4.1 command for displaying information about devices. We will only review this command relative to printers.

Examples:

1. To list the current attribute values for the lp0 device, enter:

```
# lsattr -l lp0 -E
ptop       600       Printer TIME OUT period                    True
line       66        Number of LINES per page                   True
col        80        Number of COLUMNS per page                 True
ind        0         Number of columns to INDENT                True
plot       no        Send all characters to printer UNMODIFIED  True
backspace  yes       Send BACKSPACES                            True
cr         yes       Send CARRIAGE RETURNS                      True
form       yes       Send FORM FEEDS                            True
lf         yes       Send LINE FEEDS                            True
addcr      yes       Add CARRIAGE RETURNS to LINE FEEDS         True
case       no        Convert lowercase to UPPERCASE             True
tabs       yes       EXPAND TABS on eight position boundaries   True
wrap       no        WRAP CHARACTERS beyond the specified width True
mode       no        Return on ERROR                            True
interface  standard  Type of PARALLEL INTERFACE                 True
autoconfig available STATE to be configured at boot time        True
busy_delay 0         Microseconds to delay between characters   True
#
```

Figure 27. Listing Current Attributes for Device lp0 Using lsattr

2. To list the default attribute values for the lp0 device, enter:

```
# lsattr -l lp0 -D
ptop       600       Printer TIME OUT period                    True
line       64        Number of LINES per page                   True
col        80        Number of COLUMNS per page                 True
ind        0         Number of columns to INDENT                True
plot       no        Send all characters to printer UNMODIFIED  True
backspace  yes       Send BACKSPACES                            True
cr         yes       Send CARRIAGE RETURNS                      True
form       yes       Send FORM FEEDS                            True
lf         yes       Send LINE FEEDS                            True
addcr      yes       Add CARRIAGE RETURNS to LINE FEEDS         True
case       no        Convert lowercase to UPPERCASE             True
tabs       yes       EXPAND TABS on eight position boundaries   True
wrap       no        WRAP CHARACTERS beyond the specified width True
mode       no        Return on ERROR                            True
interface  standard  Type of PARALLEL INTERFACE                 True
autoconfig available STATE to be configured at boot time        True
busy_delay 0         Microseconds to delay between characters   True
#
```

Figure 28. Listing the Default Attributes for Device lp0 Using lsattr

3. To list the default attribute values for a 4019 parallel printer, enter:

```
# lsattr -c printer -s parallel -t ibm4019 -D
ptop       600       Printer TIME OUT period                    True
line       64        Number of LINES per page                   True
col        80        Number of COLUMNS per page                 True
ind        0         Number of columns to INDENT                True
plot       no        Send all characters to printer UNMODIFIED  True
backspace  yes       Send BACKSPACES                            True
cr         yes       Send CARRIAGE RETURNS                      True
form       yes       Send FORM FEEDS                            True
lf         yes       Send LINE FEEDS                            True
addcr      yes       Add CARRIAGE RETURNS to LINE FEEDS         True
case       no        Convert lowercase to UPPERCASE             True
tabs       yes       EXPAND TABS on eight position boundaries   True
wrap       no        WRAP CHARACTERS beyond the specified width True
mode       no        Return on ERROR                            True
interface  standard  Type of PARALLEL INTERFACE                 True
autoconfig available STATE to be configured at boot time        True
busy_delay 0         Microseconds to delay between characters   True
#
```

Figure 29. Listing Possible Attributes for a Printer Using lsattr

4. To list the possible values of the ptop attribute for a 4019 parallel printer, enter:

```
# lsattr -c printer -s parallel -t ibm4019 -a ptop -R
1...2000 (+1)
#
```

4.4.2 Temporarily Changing Printer Device Device Settings

Printer device settings can be temporarily changed by using the `splp` command. This command modifies the settings for the printer device but these changes are not permanent. To change the printer settings, enter:

```
# splp -W + -C +
# splp

device = /dev/lp0      (+ yes     ! no)
CURRENT FORMATTING PARAMETERS (ignored by qprt, lpr, and lp commands)
Note: -p + causes the other formatting parameters to be ignored.
-p !    pass-through?                  -c +    send carriage returns?
-l 66   page length (lines)            -n +    send line feeds?
-w 80   page width (columns)           -r +    carriage rtn after line feed?
-i 0    indentation (columns)          -t !    suppress tab expansion?
-W +    wrap long lines?               -b +    send backspaces?
-C +    convert to upper case?         -f +    send form feeds?
CURRENT ERROR PROCESSING PARAMETERS
-T 600  timeout value (seconds)        -e !    return on error?
```

Figure 30. Changing Printer Settings - Using splp

In this example, the printer settings were modified and then displayed.

The changes that the `splp` command makes remain in effect until the next time you restart the system or rerun the `splp` command. The `splp` command can be run from the /etc/inittab command file to configure your printer each time you start up the system.

4.4.3 Permanently Changing Printer Device Settings

Printer device settings may be permanently modified by using the `smit chgprt` command. This command invokes a SMIT dialogue that allows you to modify the printer device settings. To modify a printer use the process described in section 4.4.1.1, “Displaying Printer Device Settings with the smit chgprt Command” on page 68.

4.4.4 Moving a Printer to Another Port

In the circumstances where you wish to keep all of a printer's configuration information, but move the printer to a new port, you can use the `smit movprt` command. This command invokes a simple SMIT dialogue for moving your printer to a new port. To perform this task:

1. Enter `smit movprt`.
2. You will be presented with a list of configured printers. Select the printer you wish to configure.
3. You are now presented with a list of available communications adapters. Select the adapter that you wish to move the printer to.
4. You must now select the port number on the selected adapter. When you press Enter the printer will be moved to a new port.

4.4.5 Removing a Printer Device

Printer devices may be removed using the `smit rmvprt` command. To remove a printer:

1. Enter `smit rmvprt`.
2. You will be presented with a list of configured printers. Select the one you wish to remove.
3. You will be presented with the Remove a Printer/Plotter menu where you may select whether or not you wish to save the configuration in the ODM database. If you ask to have the printer left in the database it will show as defined but not available. This is useful if you wish to temporarily use a port for other purposes. To change a printer that is defined but not available back to being available use the Configure a Defined Printer/Plotter option on the `smit pdp` menu.

4.5 Configuring and Managing Virtual Printers

To manage the print spooling subsystem in AIX V3.1 we had to deal with four objects (virtual printer, queue, queue device and printer device) while in AIX V4.1 we deal with only one object (print queue). None of the previous AIX V3.1 four objects have disappeared in AIX V4.1. They are hidden under the print queue object.

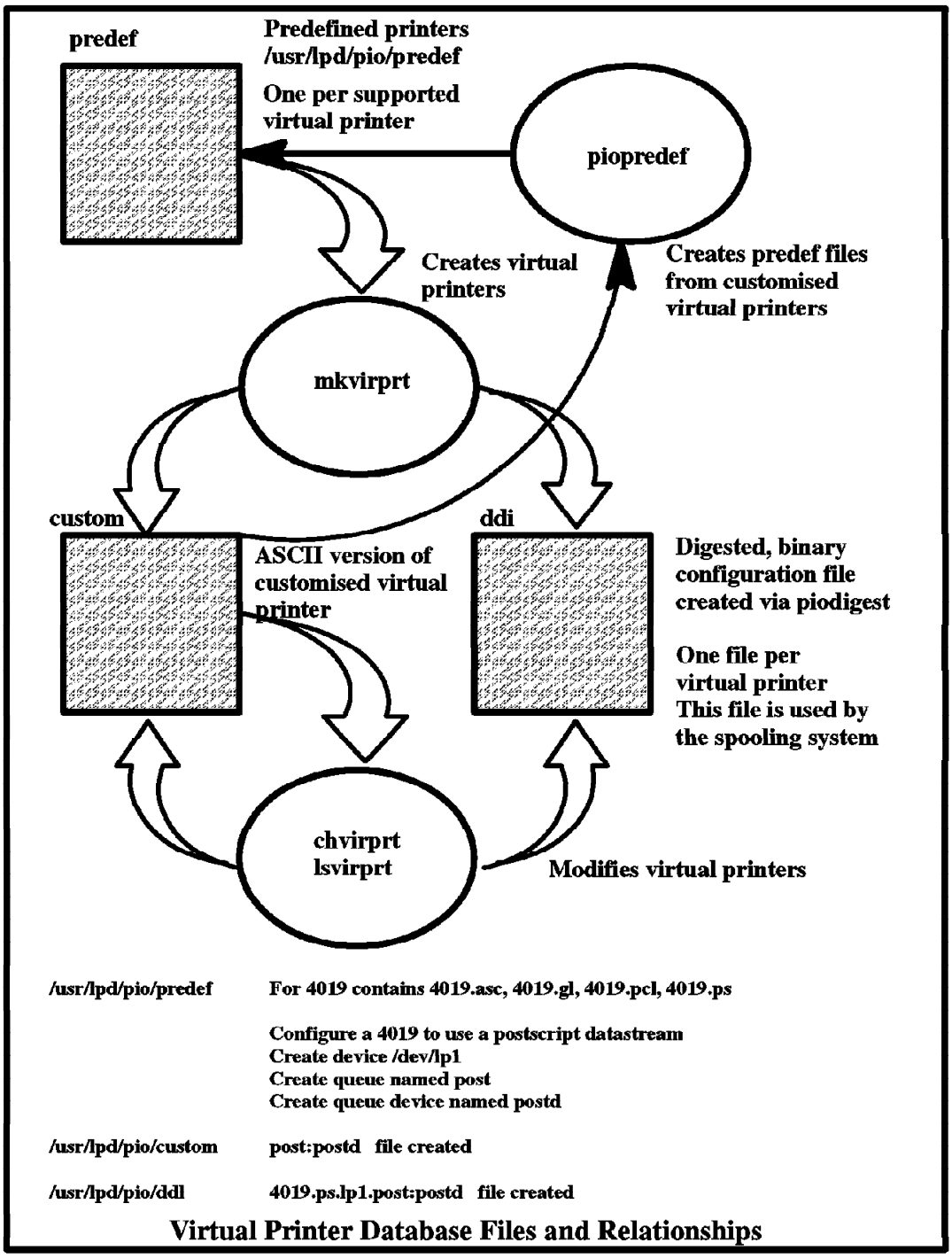

Figure 31. The Virtual Printer Database

Even though you do not have to deal with a virtual printer in AIX V4.1 we will see its concept and how to manage it.

In section 1.1.3.1, “Printers, Virtual Printers, and Print Queues” on page 6 we discussed the virtual printer database. The virtual printer database is in effect a series of files that describe the way in which print requests should be processed

such that the correct data stream is delivered to the printer. Figure 31 shows the relationship between the various files that make up the virtual printer database.

When your system is installed it includes predefined printer attributes in the /usr/lib/lpd/pio/predef directory. When you configure a virtual printer this predefined set of attributes is customized and stored in a file in the /var/spool/lpd/pio/@local/custom directory. This file, containing all the attributes (the predefined and the customized), is built for each printer queue:device pairing that is configured. The file in the /var/spool/lpd/pio/@local/custom directory, which both contains the predefined and customized attributes, is then digested by the `piodigest` command and placed into a file in the /var/spool/lpd/pio/@local/ddi directory. Each file is named with the following convention:

```
PrinterType.DataStreamType.DeviceName.PrintQueueName:QueueDeviceName

For example    ibm4109.ps.lp0.4019ps:lp0

    PrinterType     = ibm4019   - IBM 4019 LaserPrinter
    DataStreamType  = ps        - PostScript data stream
    DeviceName      = lp0       - Print device is /dev/lp0
    PrintQueueName  = 4019ps    - Print queue name, defined in qconfig file
    QueueDeviceName = lp0       - Queue device name, defined in qconfig file
```

Figure 32. Virtual Printer File Naming Convention for /usr/lpd/ddi

In AIX V3.1 the PrinterType for an IBM 4019 was `4019`. In AIX V4.1 the same IBM 4019 has PrinterType `ibm4019`. All printers had their PrinterTypes modified in AIX V4.1.

When you edit a virtual printer file via `chvirprt` (or `lsvirprt`) you are, in fact, editing the /var/spool/lpd/pio/@local/custom entry. The `chvirprt` command invokes the `piodigest` command to build a modified version of the digested file in the /var/spool/lpd/@local/custom/ddi file. If you look at the /usr/lib/lpd/pio/predef or /var/spool/lpd/@local/custom files they contain a series of lines that look something like the following:

```
:678:_l:S[D045[I[1810531[E#G[0..[:66
:700:_p:DnE#V[% W1[:10
:808:_q:Dn:
:701:_s:DnEnV[% W1[:courier
```

Figure 33. Example of an Entry in the predef and custom Files

Each line represents a particular attribute of the data stream and the value associated with it. For example, `_p` is the print pitch attribute and it is set to a value of 10 characters per inch. When we look at the virtual printer definition via the `lsvirprt` command, we can see that each of these lines translates into something that looks like the following:

```
_l      LINES per page                                      66
_p      PITCH (characters per inch)                         10
_q      (Attribute referenced by formatter but not used)
_s      TYPE STYLE (name)                                   courier
```

Figure 34. Virtual Printer Viewed via chvirprt or lsvirprt

AIX V3.1 provided facilities to modify the virtual printer database. Since AIX V4.1 has kept the virtual printer database but has hidden it under the unique concept of a print queue, we will show how we can access the virtual printer database. Let's show how to perform the following operations:

- Add a virtual printer
- Show the attributes of a virtual printer
- Change the attributes of a virtual printer
- Remove a virtual printer.

4.5.1 Add a Virtual Printer

In AIX V3.1 you could use SMIT to add a virtual printer. In AIX V4.1 you can still use SMIT to add a virtual printer, but you will not have a specific SMIT screen for that. In section 2.1.2, “Adding a Print Queue” on page 18, when we were adding an IBM 4019 printer, the following screen was shown:

```
                                Add a Print Queue

Type or select values in entry fields.
Press Enter AFTER making all desired changes.

                                                        [Entry Fields]

  Description                                          IBM 4019 LaserPrinter

  Names of NEW print queues to add
     ASCII                                            []

     GL Emulation                                     []

     PCL Emulation                                    []

     PostScript                                       []


  Printer connection characteristics
*    PORT number                                      [p]
        +
     Type of PARALLEL INTERFACE                       [standard]
        +
     Printer TIME OUT period (seconds)                [600]
        +#
     STATE to be configured at boot time               available               +



F1=Help             F2=Refresh          F3=Cancel           F4=List
F5=Reset            F6=Command          F7=Edit             F8=Image
F9=Shell            F10=Exit            Enter=Do
```

This is the way to add a virtual printer under AIX V4.1. When you are adding a print queue, AIX V4.1 creates a virtual printer (queue) for each type of emulation the printer can handle. AIX knows which kind of virtual printer (queue) it has to create based on the files the printer has in the /usr/lib/lpd/pio/predef directory. In our example, the files that start with ibm4019.

4.5.2 Change/Show the Attributes of a Virtual Printer

In AIX V3.1 we could use SMIT or the `chvirprt` and `lsvirprt` commands to change/show the attributes of a virtual printer. In AIX V4.1 we still can use the `lsvirprt` and `chvirprt` commands to have access to all the attributes of a virtual printer. But if you use SMIT, you will only have access to some default attributes of a virtual printer.

To change/show the attributes of a virtual printer under AIX V4.1:

1. Type `smit lsvirprt` and press Enter. The following screen will be displayed:

```
                         Print Queue to Change / Show

Type or select a value for the entry field.
Press Enter AFTER making all desired changes.

                                                      [Entry Fields]
* PRINT QUEUE name                                  []                      +

F1=Help             F2=Refresh          F3=Cancel           F4=List
F5=Reset            F6=Command          F7=Edit             F8=Image
F9=Shell            F10=Exit            Enter=Do
```

2. Fill the PRINT QUEUE name field with the name of the print queue (virtual printer) you want to change/show or press F4 to have a list of available queues. Make your selection and press Enter. A screen like the following will be displayed:

```
                         Print Queue to Change / Show

Type or select a value for the entry field.
Press Enter AFTER making all desired changes.

                                                      [Entry Fields[
* PRINT QUEUE name                                  [4019ascii]             +

  ___________________________________________________________________________
  |                    Characteristic to Change / Show                      |
  |                                                                         |
  | Move cursor to desired item and press Enter.                            |
  |                                                                         |
  |   1 Printer Setup                                                       |
  |   2 Default Print Job Attributes                                        |
  |   3 Accounting File                                                     |
  |   4 Queuing Discipline                                                  |
  |                                                                         |
  | F1=Help                 F2=Refresh              F3=Cancel               |
F1| F8=Image                F10=Exit                Enter=Do                |
F5| /=Find                  n=Find Next                                     |
F9|_________________________________________________________________________|
```

3. Select the `2 Default Print Job Attributes` option and press Enter. A screen like the following will be displayed:

```
                  Change / Show Default Print Job Attributes

Type or select values in entry fields.
Press Enter AFTER making all desired changes.

[TOP]                                                  [Entry Fields]
  Print queue name                                    4019ascii
  Printer name                                        lp0

  -------------- Text Print Options -------------
  TYPESTYLE and PITCH                                 courier  10            +
  EMPHASIZED print?                                   no                     +
  DOUBLE-STRIKE print?                                no                     +
  DOUBLE-HIGH print?                                  no                     +
  DOUBLE-WIDE print?                                  no                     +

  ----------- Job Processing Options ------------
  PAGE NUMBER where printing should begin            [1]                    +#
  Print file TYPE                                     a                     +
  Pre-processing FILTER NAME                         []                     +
[MORE...27[

F1=Help             F2=Refresh          F3=Cancel           F4=List
F5=Reset            F6=Command          F7=Edit             F8=Image
F9=Shell            F10=Exit            Enter=Do
```

In the previous screen we have access to some attributes of a virtual printer. It shows some of the printer attributes in a better way. For instance, the PAGE NUMBER where printing should begin is the `_g` flag you see when using the `lsvirprt` command.

If you need to change/show more complex attribute strings editing the /usr/lpd/custom file is more convenient. If you edit the custom file you must use `chvirprt` or `lsvirprt` to digest the changes and reflect them in the binary version of the virtual printer. This topic is discussed in greater depth in section 5.2, “Configuring Nonsupported Printers” on page 86.

4.5.3 Remove a Virtual Printer

Removing a virtual printer in AIV V4.1 is as easy as in AIX V3.1. Actually removing a virtual printer in AIX V4.1 is the same as removing a print queue. To remove a virtual printer (print queue) follow the steps in section 4.2.5, “Removing a Print Queue - the rmque Command” on page 60. You can also use the `rmvirprt` command to remove a virtual printer (print queue) in AIX V4.1.

Chapter 5. Advanced Printing Topics

In this chapter we will discuss some advanced printing topics. The topics we will be talking about are:

- Printing via an ASCII Terminal Attached Printer
- Configuring Nonsupported Printers
- Printing via an IBM Xstation
- PostScript Printing - Some Differences
- Using the Print Spooling Subsystem as a Generic Spooling Subsystem
- Printer and Plotters Tips and Hints

5.1 Printing via an ASCII Terminal Attached Printer

It is possible to connect a printer to the auxiliary port of an ASCII terminal such as an IBM 3151. You may then want to print to that printer in the same manner as you print to any other shared printer and still work on the terminal at the same time as something is being printed.

In AIX V3.1 there was no formal support for printing to an ASCII terminal attached printer. In AIX V4.1 this has been made as easy as adding a printer attached to the host.

5.1.1 Configuring an ASCII Terminal Attached Printer

Most of the asynchronous ASCII terminals used in UNIX systems have an auxiliary port which can be used to connect a printer. In this section we will show how to set up an IBM 2380-2 printer attached to an IBM 3151 model 310 ASCII terminal. If you are using a terminal other than the IBM 3151 which will support a printer attached to it, you will have to find out how to set up your terminal and its auxiliary port. We are also assuming that this terminal is attached to your system, and it is working.

5.1.1.1 Hardware Setup

Before adding the printer to your AIX V4.1 system perform the following steps:

1. Connect you serial printer to the auxiliary port of your terminal using a RS232 cable. For the IBM 3151 terminal, just a pin-thru cable is required. See cable D in Appendix D, “RISC System/6000 Printer Cabling” on page 213.
2. Make note of the following settings for your printer:
   - Line speed (baud rate in bps)
   - Word Length (bits per char)
   - Parity (odd, even, no, space, mark)
   - Stop Bits (1,2)

© Copyright IBM Corp. 1991, 1994

5.1.1.2 Configuring the Auxiliary Port in your Terminal

On the IBM 3151 terminal perform the following steps:

- Turn on your IBM 3151 terminal
- Simultaneously press the Ctrl and the Setup keys. The SETUP MENU is displayed.
- Using the Send key select the `KEYBOARD/PRINTER` option. Fill in the PRINTER options with the printer settings you have noted.
- Using the Send key select the `FUNCTION` option. Select the `Save` option and press Space key to save your configuration.

5.1.1.3 Adding the Printer to your System

Now that you have physically attached the printer to your working terminal and configured its auxiliary port with the printer settings, perform the next steps to add your printer to the print spooling subsystem. The procedure is similar to the 2.1.2, “Adding a Print Queue” on page 18:

1. Log on as root or a member of the printq admin group.
2. Enter `smit mkpq` . The following screen will be displayed:

```
                              Add a Print Queue

Move cursor to desired item and press Enter. Use arrow keys to scroll.

  # ATTACHMENT TYPE      DESCRIPTION
    local                Printer Attached to Local Host
    remote               Printer Attached to Remote Host
    xstation             Printer Attached to Xstation
    ascii                Printer Attached to ASCII Terminal
    hpJetDirect          Network Printer (HP JetDirect)
    file                 File (in /dev directory)
    ena                  Printer or Plotter Attached to IBM 4033 LAN Con
    lex                  Printer Attached via TCP/IP to IBM Integrated N
    other                User Defined Backend

F1=Help                 F2=Refresh              F3=Cancel
F8=Image                F10=Exit                Enter=Do
/=Find                  n=Find Next
```

3. In the previous screen select the `ascii` option. The following screen will be displayed:

```
                                Printer Type

Move cursor to desired item and press Enter.

  Bull
  Canon
  Dataproducts
  Hewlett-Packard
  IBM
  OKI
  Printronix
  QMS
  Texas Instruments
  Other (Select this if your printer type is not listed above)

F1=Help                 F2=Refresh              F3=Cancel
F8=Image                F10=Exit                Enter=Do
/=Find                  n=Find Next
```

4. Select your printer brand in the previous screen. In our example we have selected `IBM` because we are installing an IBM 2380-2 Plus Printer (Model 2). The following screen will be displayed:

```
                                Printer Type

Move cursor to desired item and press Enter.

[TOP]
  ibm2380       IBM 2380 Personal Printer II
  ibm2380-2     IBM 2380 Plus printer (Model 2)
  ibm2381       IBM 2381 Personal Printer II
  ibm2381-2     IBM 2381 Plus printer (Model 2)
  ibm2390       IBM 2390 Personal Printer II
  ibm2390-2     IBM 2390 Plus printer (Model 2)
  ibm2391       IBM 2391 Personal Printer II
  ibm2391-2     IBM 2391 Plus printer (Model 2)
  ibm3812-2     IBM 3812 Model 2 Page Printer
  ibm3816       IBM 3816 Page Printer
  ibm4019       IBM 4019 LaserPrinter
[MORE...43]

F1=Help                 F2=Refresh              F3=Cancel
F8=Image                F10=Exit                Enter=Do
/=Find                  n=Find Next
```

5. Select your printer model. In our example, we have selected the `ibm2380-2` option. The following screen will be displayed:

```
                                Printer Type

Move cursor to desired item and press Enter.

[TOP]
  ibm2380      IBM 2380 Personal Printer II
  ibm2380-2    IBM 2380 Plus printer (Model 2)
  ibm2381      IBM 2381 Personal Printer II
  ibm2381-2    IBM 2381 Plus printer (Model 2)
  ibm2390      IBM 2390 Personal Printer II

                                TTY Name

Move cursor to desired item and press Enter.

  tty0 Available 00-00-S1-00 Asynchronous Terminal
  tty1 Available 00-00-S2-00 Asynchronous Terminal

F1=Help                 F2=Refresh              F3=Cancel
F8=Image                F10=Exit                Enter=Do
/=Find                  n=Find Next
```

6. Select the tty for the terminal that has your printer attached. In our example we have our printer attached to `tty0`. The following screen is displayed:

```
                            Add a Print Queue

Type or select values in entry fields.
Press Enter AFTER making all desired changes.

                                                      [Entry Fields]
  Description                                        IBM 2380 Plus printer >
  Printer name                                       tty0

* Name of new PRINT QUEUE to add                    [2380ascii]









F1=Help             F2=Refresh          F3=Cancel           F4=List
F5=Reset            F6=Command          F7=Edit             F8=Image
F9=Shell            F10=Exit            Enter=Do
```

7. In the previous screen fill the Name of new PRINT QUEUE to add field with the name of the print queue for the terminal attached printer. In our example we have used the name `2380ascii` for this print queue. If you are successful a screen like the following is displayed:

```
                                COMMAND STATUS

Command: OK            stdout: yes           stderr: no

Before command completion, additional instructions may appear below.

Added print queue '2380ascii'.









F1=Help             F2=Refresh          F3=Cancel           F6=Command
F8=Image            F9=Shell            F10=Exit            /=Find
n=Find Next
```

5.1.2 Testing your Printer

To see if your printer is working, first issue a `lpstat` command to list all the available print queues in your system. In our example we have the following screen:

```
# lpstat
Queue   Dev   Status    Job Files              User         PP %   Blks  Cp Rnk
------- ----- --------- --- ------------------ ---------- ---- -- ----- --- ---
4019gl  lp0   READY
4019pcl lp0   READY
4019ps  lp0   READY
4019ps  lp1   READY
psth    @gand READY
psth    psdup READY
psdup   ps403 READY
ascth   @gand READY
ascth   ascdu READY
ascdup  asc   READY
rasc    @gand READY
rasc    asc   DEV_BUSY  283 STDIN.15162        root@bob3              2   1   1
2380asc tty0  READY
```

In our example the printer is available through the 2380ascii print queue, as you can see in the last line in the previous screen.

To test if the printer is working properly, use a command of your preference send a file to the newly created print queue. In our example we have issued the following command:

```
# lp -d2380ascii /etc/qconfig
```

This command sends /etc/qconfig file to be printed in our IBM 2380-2 printer through the 2380ascii print queue

If you take a look at the qconfig file you will see the following stanzas for the terminal-attached printer:

```
2380ascii:
        device = tty0
tty0:
        file = /dev/tty0
        header = never
        trailer = never
        access = both
        backend = /usr/lib/lpd/piobe
```

As you can see in the file = /dev/tty0 stanza, the output device for the terminal attached printer is the device driver for the terminal. What happens if you want to print directly to the device driver instead of printing through the spooling subsystem? We will show an example.

Log on to the terminal that has the printer attached (in our example tty0) so that you can send data to be displayed in this terminal. Type the following command on any other terminal (not on tty0):

```
#banner Printing to terminal > /dev/tty0
```

You will see a screen like the following on tty0 terminal:

```
#####   #####     #    #    #   #####     #    #    #   ####
#    #  #    #    #    ##   #     #       #    ##   #  #    #
#    #  #    #    #    # #  #     #       #    # #  #  #
#####   #####     #    #  # #     #       #    #  # #  #  ###
#       #   #     #    #   ##     #       #    #   ##  #    #
#       #    #    #    #    #     #       #    #    #   ####


 #####   ####
   #    #    #
   #    #    #
   #    #    #
   #    #    #
   #     ####


  #####  ######  #####   #    #     #    #    #    ##    #
    #    #       #    #  ##  ##     #    ##   #   #  #   #
    #    #####   #    #  # ## #     #    # #  #  #    #  #
    #    #       #####   #    #     #    #  # #  ######  #
    #    #       #   #   #    #     #    #   ##  #    #  #
    #    ######  #    #  #    #     #    #    #  #    #  ######
```

Even though the device driver defined in the qconfig file for the printer attached to the terminal is /dev/tty0, if you print directly to /dev/tty0 the output is sent to the terminal, not to the printer.

If you want to print directly to the printer you need to send some control characters to the terminal prior to sending data to the printer. These control characters tell the terminal to work in pass-through mode, that is, data sent to the terminal in this

mode should be sent to the auxiliary port and not to the screen. To exit from the pass-through mode, control characters need to be sent to the terminal.

The control characters we are using in the next example are valid only for the IBM 3151 terminal models 110/310/410. If you are using another terminal type you should find which characters makes your terminal work in a pass-through mode.

Example:

Type the following command on the other terminal (not on tty0):

```
#echo ^P^R > /dev/tty0
```

This tells the tty0 terminal to work in pass-through mode. These control characters can be obtained by holding the Ctrl key and typing `vpvr`. This should be read as Ctrl-P + Ctrl-R. You do not need to hold the Shift key to get a capital p or capital r.

Now type the following command on the other terminal (not on tty0):

```
# banner printing to printer > /dev/tty0
```

You should get the following output on your printer:

```
#####   #####     #    #    #   #####     #    #    #   ####
#    #  #    #    #    ##   #     #       #    ##   #  #    #
#    #  #    #    #    # #  #     #       #    # #  #  #
#####   #####     #    #  # #     #       #    #  # #  #  ###
#       #   #     #    #   ##     #       #    #   ##  #    #
#       #    #    #    #    #     #       #    #    #   ####


 #####   ####
   #    #    #
   #    #    #
   #    #    #
   #    #    #
   #     ####


#####   #####     #    #    #   #####  ######  #####
#    #  #    #    #    ##   #     #    #       #    #
#    #  #    #    #    # #  #     #    #####   #    #
#####   #####     #    #  # #     #    #       #####
#       #   #     #    #   ##     #    #       #   #
#       #    #    #    #    #     #    ######  #    #
```

Now, anything that you send to tty0 is going to be sent to your printer. To tell the terminal to stop working in pass-through mode type the following command:

```
#echo ^P^T > /dev/tty0
```

The control characters used in the previous command should be read as Ctrl-P + Ctrl-T. These characters can be obtained by holding the Ctrl key and typing `vpvt`.

Based on the previous example you can understand how the piobe backend sends data to be printed on a terminal attached printer.

You should be aware that printing on a printer attached to an ASCII terminal is not as fast as printing to a printer attached directly to the host. All data that is sent to the terminal and to the printer attached to this terminal uses the same connection to the host. Loss of performance is expected.

5.2 Configuring Nonsupported Printers

While IBM supports a wide range of printers via AIX V4.1, due to changes in technology, or the need to protect investment in older printers, you may wish to use a printer that is not formally supported by AIX V4.1. By not formally supported, we mean that device drivers and virtual printers are not supplied with AIX V4.1 and that IBM's defect support process may not fully support the resolution of problems associated with these printers. For the purposes of this document we will call these printers nonsupported printers.

There is a choice of approaches to incorporate nonsupported printers into the AIX V4.1 print spooling subsystem. This section discusses some of these options. As was mentioned in the overview of the AIX V4.1 printing facilities in section 1.1, “A Technical Overview of Printing under AIX V4.1” on page 4, there are two basic ways to drive printers: through the device driver or a print spooling subsystem. The following recommendations are some basic strategies that may be employed to configure nonsupported printers:

- An application may use the printer device driver to direct output to the actual printer.
- The print spooling subsystem and its facilities can be used to service nonsupported printers in several methods:
  - Your printer device may emulate, or closely approximate, one of the many supported printer devices. In this situation you can configure your printer using the definitions for the printer that your printer emulates.

    For example, AIX V4.1 provides support for the Hewlett-Packard LaserJet II** printer type. This printer is identified as an hplj-2 in AIX V4.1. If your printer emulates the Hewlett-Packard LaserJet II, it can be configured using the AIX V4.1 hplj-2 device information. This is the recommended approach when possible.
  - You may configure your printer device driver, print queue, virtual printer, and so on but set the printing system to pass all print requests transparently to the printer. In this case the application will take responsibility for correctly assembling the printer data stream. You can still utilize the print spooling system to share the printer between users, but the virtual printer system will not be used to format printer data streams. This is, in effect, the way PostScript and HPGL printers are supported.
  - Where no AIX V4.1 supported printer matches the printer you wish to configure, you can install your printer by configuring it first as a printer that is similar to yours. You then modify its characteristics to suit your purposes.

In this case you create a new or modified virtual printer that provides the function you require.

– In cases where an output device has special formatting requirements, for example, an electrostatic plotter that requires input be rasterized, you can substitute the formatting software for the formatter or the printer backend program. In this example the electrostatic rasterizing program could be substituted for the formatter.

5.2.1.1 Device Drivers and Nonsupported Printers

A device driver may be configured for a nonsupported printer. To do this you select the printer most similar to yours, or one of the generic printer devices AIX V4.1 supports, and then modify it to suit. AIX V4.1 provides support for two generic printer devices, opp and osp.

It is recommended that unless you are confident that your printer emulates a supported printer device, you should use the generic printer devices. If your printer has no or very small buffers then the IBM Proprinter II (4201-2), should be used as the printer device.

You can temporarily modify the characteristics of the device driver using the `splp`command or permanently modify them via the `smit chgprt` command. These commands are discussed in section 4.4, “Configuring and Managing Printer Devices” on page 68.

5.2.2 Pass-Through Mode Printing

As mentioned, one viable strategy in using a non-IBM supported printer is to configure a printer device and virtual printer but then only use it in a transparent manner. This can be done on three levels:

1. The printer device driver can be made transparent by setting the pass-through flag `-p=+`. This is discussed in section 4.4, “Configuring and Managing Printer Devices” on page 68.
2. The `piobe` command can be set to pass-through mode using the `piobe -d p` command. This means the `piobe` passes the print request to the printer unmodified. The `piobe` command always uses the device driver in pass-through mode.
3. The `qprt` print request command can be issued with flag that specifies that the print job be passed, unmodified, through piobe. For example, the `qprt -d p myfile` will pass myfile to the printer without the printer database formatting information being applied to myfile.

5.2.3 Configuring Nonsupported Printers - An Example

In this example, a Mannesman Tally 86** printer is set up as a generic ASCII printer. This printer does not emulate an IBM Proprinter, Postscript, GL or PCL and is therefore a good test.

The steps to add the printer are the same as those seen in 2.1.2, “Adding a Print Queue” on page 18:

- Type `smit mkpq`.

- Select `local`.
- Select `Other`.
- Select `generic`.
- Select the Printer Interface, in our example, `rs232`.
- Select the Parent Adapter, in our example, `sa1`.

  The following screen is displayed after making the selection:

```
                                Add a Print Queue

Type or select values in entry fields.
Press Enter AFTER making all desired changes.

[TOP]                                                  [Entry Fields]
  Description                                         Generic Printer

  Names of NEW print queues to add
     ASCII                                           [manascii]
     GL Emulation                                    []
     PCL Emulation                                   []
     PostScript                                      []

  Printer connection characteristics
*    PORT number                                     [s2]                    +
     BAUD rate                                       [9600]                  +
     PARITY                                          [none]                  +
     BITS per character                              [8]                     +
     Number of STOP BITS                             [1]                     +
[MORE...3]

F1=Help             F2=Refresh          F3=Cancel           F4=List
F5=Reset            F6=Command          F7=Edit             F8=Image
```

- In the previous screen, enter the port number and set the communications parameters to match the printer settings. As we are using the Mannesman Tally 86 printer as an ASCII printer, we will only add an ASCII queue for it.
- Press F10 to exit smit.

The ASCII virtual printer does not send any initialization or restore sequences to the printer. The only characters sent are tab, ff, lf etc. No escape sequences are used so the particular emulation is irrelevant.

This setup was tried and the printer worked correctly in basic draft mode. To use the features of a printer that is set up in this way, requires the various codes to be embedded in the file that is printed. This kind of file with embedded escape sequences will also need to be printed in pass-through mode(for example `qprt -d p filename`).

5.2.4 Customizing Nonsupported Virtual Printers

Although it is possible to make a nonsupported printer work as described in section 5.2.3, “Configuring Nonsupported Printers - An Example” on page 87, this does not allow most of the features of the printer to be selected from the command line. Also, it does not allow easy alteration of the virtual printer to use the features of the printer.

To fully support the features of a printer and the print spooling subsystem you have to create a new virtual printer definition. A virtual printer is a data stream and

printer pairing that is physically represented as a unique entry in the virtual printer database.

The first step in customizing a nonsupported printer is, therefore, to identify the printer data stream that best matches the printer you wish to use. AIX V4.1 supports the following data streams through predefined virtual printers:

asc Extended ASCII
pcl Hewlett-Packard LaserJet
gl Plotter emulation
ps PostScript
630 Diablo 630**
855 Texas Instruments 855** dot matrix printer in dp mode
plt Plotter

Once the data stream has been determined it is then possible to look at the printers that support that data stream. The virtual printers supported by AIX V4.1 are outlined in Appendix B, “Supported AIX V4.1 Printers” on page 203. For example, some PostScript printers supported are:

- ibm4019.ps
- ibm4029.ps
- ibm4039.ps
- ibm4079.ps
- hplj-3.ps
- hplj-3i.ps
- hplj-4.ps
- generic.ps

At this point, the decision of which printer is to be used for the customization is made by either knowing which printer is most like your nonsupported printer, or by comparing the customization parameters. Generally, the key things to look at are how the printer's various emulations are handled and how many of the features are to be implemented and used. If a generic printer is used, then all the basic features are already available in the existing virtual printer and the others must be added.

5.2.4.1 Configuring a New Virtual Printer

The process below can be used to create a new virtual printer:

1. Configure a virtual printer most similar to the one that you will be building. Let's say for this example that you select the Dataproduct** LZR 2665 Laser Printer in Diablo 630 mode which has the dp2665.630 file as its predefined virtual printer. Create a virtual printer called 630:lp3 using the `smit mkpq` command and choosing 630 as the print queue name.
2. Print out the virtual printer definition using the following command:

   ```
   lsvirprt -q 630 -d lp3 | qprt
   ```

   Let's hope you already have a printer to do this.
3. Review the virtual printer attribute file against the printer documentation you have and determine what attributes need to be modified to correctly drive your printer.

4. Modify the /var/spool/lpd/pio/@local/custom/630:lp3 attribute file via one of two methods:

   - The simplest way to change the options of a newly defined virtual printer is to run `lsvirprt` or `smit lsvirprt`. The `lsvirprt` command is a good way to alter the flags since all the options have descriptions and the updated values are displayed. The major disadvantage to using `lsvirprt` is that some of the character sequences that must be edited are long. The `lsvirprt` command requires you to re-key the entire string even if only one character is to be changed. SMIT could be used if the flags you are updating belong to the Default Print Job Attributes. SMIT does not bring you all the possible flags to be changed.
   - It is also possible to edit the newly created custom file using your favorite editor. This approach is potentially more hazardous to the health of your virtual printer, but can be effective if you are familiar with the virtual printer database structures. If you edit the file you must then use `lsvirprt` or `piodigest` to digest the definition.

   The process of determining which values need to be changed is not simple. It requires a good understanding of how the printer you are using works. There is an example of this process in section 5.2.5, “Adding a Printer that Emulates a Proprinter (Mannesman Tally 87)” on page 91, and virtual printer colon file syntax is discussed in Appendix E, “Virtual Printer Colon Files and Formatter” on page 221.

5. Test this new printer definition by configuring the printer and testing its ability to print the types of jobs you wish to print. Try to stress the printer. For example, if you have a printer that prints in different emulations ensure you send several jobs to the printer that test its ability to change modes successfully. Try to ensure you exercise all the areas that you specifically changed.

6. If you wish to configure more of these printers you can build a predefined virtual printer definition so that you do not need to use this full process every time you want to configure the same type of printer. This is done by running the `piopredef` command. In our example, the command would be as follows:

   ```
   piopredef -d lp3 -q 630 -s 630 -t mytype
   ```

   This will create the /usr/lib/lpd/pio/predef/mytype.630 file.

The above process is also fully documented in InfoExplorer* and can be found in an article titled Adding a New Printer Type to Your System.

Other points to remember are:

- PostScript and HPGL printers are pass-through printers so there is little to alter between the different printers.
- Even if a printer has many of the same escape codes for features, be sure that they behave the same when changing from one feature to another.
- Even though printers may support similar data streams, they may use initialization, setup or conditional statements, which are quite different.

5.2.5 Adding a Printer that Emulates a Proprinter (Mannesman Tally 87)

To add this printer, and to provide support for most of the features of the Proprinter, the following steps need to be performed:

1. Type `smit mkpq`.
2. Select `local`.
3. Select `IBM`.
4. Select `IBM 4201 Model 2 Proprinter II`. The Proprinter has more features than are available on this printer, but that will be addressed further.
5. Select the Printer Interface.
6. Select the Parent Adapter.
7. Type the print queue name and press Enter. The printer is added and a print queue was created.
8. To customize this printer, it would be helpful to print out the settings by entering:

   ```
   # lsvirprt -q queue -d queuedevice > /dev/lp0
   ```

   do this for whichever queue, queue device and printer that are set up.
9. To customise this printer, the /var/spool/lpd/pio/@local/custom/queue:queuedevice file can be edited or `smit lsvirprt` may be used. The fields in Table 5 must be set to null, but the flags should be left in the file.

Table 5. Colon File Fields to Be Set to Null for MT-87

Flag	Explanation	Reason for Change
mF	Download Fonts	Not supported on the MT87
t1	Stage 2 Translate	Requires a font that is not loaded
cI	Italics Print	Not supported on the MT87
c1	Rom Font	Not supported on the MT87
c2	Alternate Font	Not supported on the MT87
cs	Set Proportional	Not supported on the MT87
eP	Proportional String	Not used
eX	Set Margins	Not supported on the MT87
ef	Double-High Print	Not supported on the MT87

   If using `lsvirprt`, or `smit lsvirprt`, then the fields above would be set to null by entering, for example, mF= at the prompt. The value is changed and displayed.
10. The following fields need to be modified:

    ci The flags cs, eX, ef, and c2 need to be removed from this string, which is the initialization string sent to the printer at the start of a job

cr The flags cs, eX, ef, and c2 need to be removed from this string, which is the restore string sent to a printer at job end

cm The flags cs, eX, and ef need to be removed from string, which is the string sent to the printer when switching from primary to alternate mode

mN This is the printer model number and needs to be set to MT-87

mL This is the printer description and needs to be Mannesman Tally Proprinter mode

Manual editing is easier for the ci, cr and cm flags since they are long strings and prone to error if retyped. In this case editing the specified file and just deleting those fields in the specified strings would be easier. If manual editing is done though, remember the `piodigest queue:queuedevice` command must be executed. The `lsvirprt` command with no options changed will also run `piodigest`.

11. After the changes have been made and tested then a predefined file may be created. This is done by executing the command below:

```
# piopredef -d lp5 -q lp5 -s asc -t MT-87
```

This then creates a file in the /usr/lib/lpd/pio/predef like the following:

```
MT-87.asc
```

This printer definition file can then be used later. This file can also be moved to other machines to allow printers to be defined on them.

5.3 Printing via an IBM Xstation

Printers can be attached to either the serial or parallel ports of an IBM Xstation. In order to print to an IBM Xstation, the Xstation Manager* software must first be installed. The IBM Xstation Manager V1.2 software contains the catlpx program which acts as the backend program in the print spooling subsystem that drives the IBM Xstation connected printer. The catlpx program connects the printer to the network port, sends the processed print file to the IBM Xstation and closes the connection when the print job has finished.

5.3.1 Configuring an IBM Xstation Connected Printer

The example below outlines how a printer connected to an IBM Xstation can be configured in the IBM Xstation Manager V1.2 setting. This assumes that IBM Xstation Manager V1.2 has been installed and the IBM Xstation that will have a connected printer is known appropriately to the system. To configure an IBM Xstation connected printer:

1. Enter `smit mkpq`. The following screen will be displayed.

```
                              Add a Print Queue

Move cursor to desired item and press Enter. Use arrow keys to scroll.

  # ATTACHMENT TYPE      DESCRIPTION
    local                Printer Attached to Local Host
    remote               Printer Attached to Remote Host
    xstation             Printer Attached to Xstation
    ascii                Printer Attached to ASCII Terminal
    hpJetDirect          Network Printer (HP JetDirect)
    file                 File (in /dev directory)
    ena                  Printer or Plotter Attached to IBM 4033 LAN Con
    lex                  Printer Attached via TCP/IP to IBM Integrated N
    other                User Defined Backend

F1=Help                 F2=Refresh              F3=Cancel
F8=Image                F10=Exit                Enter=Do
/=Find                  n=Find Next
```

2. In the previous screen select the `xstation` option. The following screen will be displayed:

```
                                 Printer Type

Move cursor to desired item and press Enter.

  Bull
  Canon
  Dataproducts
  Hewlett-Packard
  IBM
  OKI
  Printronix
  QMS
  Texas Instruments
  Other (Select this if your printer type is not listed above)

F1=Help                 F2=Refresh              F3=Cancel
F8=Image                F10=Exit                Enter=Do
/=Find                  n=Find Next
```

3. In the previous screen select your printer brand. In our example we are using an IBM printer so we have selected the `IBM` option. The following screen is displayed:

```
                              Printer Type

Move cursor to desired item and press Enter.

[TOP]
  ibm2380      IBM 2380 Personal Printer II
  ibm2380-2    IBM 2380 Plus printer (Model 2)
  ibm2381      IBM 2381 Personal Printer II
  ibm2381-2    IBM 2381 Plus printer (Model 2)
  ibm2390      IBM 2390 Personal Printer II
  ibm2390-2    IBM 2390 Plus printer (Model 2)
  ibm2391      IBM 2391 Personal Printer II
  ibm2391-2    IBM 2391 Plus printer (Model 2)
  ibm3812-2    IBM 3812 Model 2 Page Printer
  ibm3816      IBM 3816 Page Printer
  ibm4019      IBM 4019 LaserPrinter
[MORE...43]

F1=Help                 F2=Refresh              F3=Cancel
F8=Image                F10=Exit                Enter=Do
/=Find                  n=Find Next
```

4. In the previous screen select the printer model you are attaching to your Xstation. In our example we are installing an `IBM 4019 LaserPrinter` model. The following screen will be displayed:

```
                              Xstation NAME

Type or select a value for the entry field.
Press Enter AFTER making all desired changes.

                                                      [Entry Fields]
* Xstation NAME                                     []                      +

F1=Help             F2=Refresh          F3=Cancel           F4=List
F5=Reset            F6=Command          F7=Edit             F8=Image
F9=Shell            F10=Exit            Enter=Do
```

5. In the previous screen press F4 to see a list of available xstations attached to your system. Select the name of the IBM Xstation that the printer will be connected to. The Xstation name is the ip name for the Xstation. In our example we have connected our printer to a Xstation named tx24.itsc.austin.ibm.com. We are using a nameserver for the name resolution. If you are not using a nameserver, you should have the Xstation name and its ip address in the /etc/hosts file, and you should use this name for the Xstation NAME field. The following screen is displayed after pressing F4:

```
                                Xstation NAME

Type or select a value for the entry field.
Press Enter AFTER making all desired changes.

                                                        [Entry Fields]
* Xstation NAME                                       []                    +




  ___________________________________________________________________________
  |                              Xstation NAME                              |
  |                                                                         |
  | Move cursor to desired item and press Enter.                            |
  |                                                                         |
  |   tx24.itsc.austin.ibm.com                                              |
  |                                                                         |
  | F1=Help                 F2=Refresh              F3=Cancel               |
F1| F8=Image                F10=Exit                Enter=Do                |
F5| /=Find                  n=Find Next                                     |
F9|_________________________________________________________________________|
```

6. The following screen is displayed after selecting `tx24.itsc.austin.ibm.com`:

```
                                Xstation NAME

Type or select a value for the entry field.
Press Enter AFTER making all desired changes.

                                                        [Entry Fields]
* Xstation NAME                                       [tx24.itsc.austin.ibm.c> +



  ___________________________________________________________________________
  |                              Xstation Type                              |
  |                                                                         |
  | Move cursor to desired item and press Enter.                            |
  |                                                                         |
  |   Xstation 120                                                          |
  |   Xstation 130                                                          |
  |   Xstation 140                                                          |
  |   Xstation 150                                                          |
  |   Xstation 160                                                          |
  |                                                                         |
  | F1=Help                 F2=Refresh              F3=Cancel               |
F1| F8=Image                F10=Exit                Enter=Do                |
F5| /=Find                  n=Find Next                                     |
F9|_________________________________________________________________________|
```

7. In the previous screen select the Xstation model. In our example, tx24.itsc.austin.ibm.com is an Xstation model 120. After making this selection a screen like the following is displayed:

```
                                Xstation NAME

Type or select a value for the entry field.
Press Enter AFTER making all desired changes.

                                                        [Entry Fields]
* Xstation NAME                                       [tx24.itsc.austin.ibm.c> +



   ___________________________________________________________________________
   |                            Xstation Type                                |
   |                                                                         |
   |___________________________________________________________________________|
   |                             Printer Type                                |
   |                                                                         |
   | Move cursor to desired item and press Enter.                            |
   |                                                                         |
   |   p  Parallel                                                           |
   |   s  Serial Port                                                        |
   |                                                                         |
   | F1=Help                 F2=Refresh              F3=Cancel               |
F1 | F8=Image                F10=Exit                Enter=Do                |
F5 | /=Find                  n=Find Next                                     |
F9 |_________________________________________________________________________|
```

8. We have selected the parallel interface in this example. The following screen is displayed:

```
                                Add a Print Queue

Type or select values in entry fields.
Press Enter AFTER making all desired changes.

                                                        [Entry Fields]
  Description                                         IBM 4019 LaserPrinter
  Printer name                                        p@tx24.itsc.austin.ibm>

  Names of NEW print queues to add
     ASCII                                           [tx24asc]
     GL Emulation                                    [tx24gl]
     PCL Emulation                                   [tx24pcl]
     PostScript                                      [tx24ps]






F1=Help             F2=Refresh          F3=Cancel           F4=List
F5=Reset            F6=Command          F7=Edit             F8=Image
F9=Shell            F10=Exit            Enter=Do
```

9. In the previous screen type a name for each emulation queue that your printer can emulate. In our example, we have four queues because the IBM 4019 LaserPrinter can emulate ASCII, GL, PCL and PostScript. If you are succesful you will get a screen like the following:

```
                                COMMAND STATUS

Command: OK            stdout: yes           stderr: no

Before command completion, additional instructions may appear below.

Added printer 'p@tx12.itsc.austin.ibm.com'.

Added print queue 'tx24asc'.
Added print queue 'tx24gl'.
Added print queue 'tx24pcl'.
Added print queue 'tx24ps'.









F1=Help             F2=Refresh          F3=Cancel           F6=Command
F8=Image            F9=Shell            F10=Exit            /=Find
n=Find Next
```

We have now configured an IBM Xstation connected printer. The qconfig stanza generated by the previous example is as follows:

```
tx24asc:
        device = p@tx24
p@tx24:
        file = /var/spool/lpd/pio/@local/dev/p@tx24.itsc.austin.ibm.com#xstation
        header = never
        trailer = never
        access = both
        backend = /usr/lib/lpd/pio/etc/piolpx p@tx24.itsc.austin.ibm.com
tx24gl:
        device = p@tx24
p@tx24:
        file = /var/spool/lpd/pio/@local/dev/p@tx24.itsc.austin.ibm.com#xstation
        header = never
        trailer = never
        access = both
        backend = /usr/lib/lpd/pio/etc/piolpx p@tx24.itsc.austin.ibm.com
tx24pcl:
        device = p@tx24
p@tx24:
        file = /var/spool/lpd/pio/@local/dev/p@tx24.itsc.austin.ibm.com#xstation
        header = never
        trailer = never
        access = both
        backend = /usr/lib/lpd/pio/etc/piolpx p@tx24.itsc.austin.ibm.com
tx24ps:
        device = p@tx24
p@tx24:
        file = /var/spool/lpd/pio/@local/dev/p@tx24.itsc.austin.ibm.com#xstation
        header = never
        trailer = never
        access = both
        backend = /usr/lib/lpd/pio/etc/piolpx p@tx24.itsc.austin.ibm.com
```

We also have created four virtual printers, the following custom files in the /var/spool/lpd/pio/@local/custom directory:

- tx24asc:p@tx24
- tx24gl:p@tx24
- tx24pcl:p@tx24
- tx24ps:p@tx24

And the following digested files are in the /var/spool/lpd/pio/@local/ddi directory:

- ibm4019.asc.p@tx24.itsc.austin.ibm.com.tx24asc:p@tx24
- ibm4019.gl.p@tx24.itsc.austin.ibm.com.tx24gl:p@tx24
- ibm4019.pcl.p@tx24.itsc.austin.ibm.com.tx24pcl:p@tx24
- ibm4019.ps.p@tx24.itsc.austin.ibm.com.tx24ps:p@tx24

5.4 PostScript Printing - Some Differences

The PostScript language from Adobe Systems** Inc. is used by many modern printers to provide the complex font, graphics and image handling capabilities demanded by modern applications. The book, *PostScript Language, Tutorial and Cookbook* from Adobe Systems Incorporated defines PostScript in the following manner:

*"The **PostScript** page description language provides a device independent standard for representing the printed page."*

PostScript is a programming language that allows applications or users to describe a page using text, geometric figures, and images. The program must be interpreted to produce a printed page. Modern printers generally interpret the programs themselves and are therefore sent a printer data stream that consists purely of the PostScript program. The printer must interpret the program's instructions and construct each page before printing it.

Therefore, the PostScript environment places different demands on the print spooling subsystem than many other printing technologies. A PostScript data stream must be passed to the printer without modification. The device driver must also pass the data stream to the printer with no change. Further, the PostScript program can include printer specific commands to do things like select paper source drawer, font handling, communications interfaces, and printer administration. These functions cannot be provided by adding escape sequences to the printer data stream as you would do for an IBM Proprinter.

5.4.1 PostScript and AIX V4.1

AIX V4.1 provides support for a selection of PostScript printers, virtual printers using the PostScript data stream and a set of utilities for transforming various forms of output to PostScript. Some of the PostScript printers supported by AIX V4.1 are described in the following table:

Table 6. PostScript Printers Supported by AIX V4.1

Printer Device Name	Virtual Printer	Printer Description
4019	ibm4019.ps	IBM 4019 LaserPrinter
4216-31	ibm4216-31.ps	IBM 4216 Personal Page Printer, Model 031
dp2665	dp2665.ps	Dataproducts LZR 2665 Laser Printer
ti2115	ti2115.ps	Texas Instruments OmniLaser 2115 Page Printer
qms100	qms100.ps	QMS ColorScript 100, Model 20
generic	generic.ps	Generic Postscript Virtual Printer

AIX V4.1 also provides a set of utilities for converting various data streams common in the AIX V4.1 environment to PostScript so that they can be printed on a PostScript printer. This set of utilities is known as the TranScript** facility. The TranScript utilities are described in the following table:

Table 7. AIX V4.1 TranScript Utilities

AIX Command	Description
enscript	Converts plain text files to PostScript format and spools them for printing
psc, psdit	Converts troff intermediate format to PostScript format
psroff	Converts files from troff format to PostScript format
ps630	Converts Diablo 630 print files to PostScript format
ps4014	Converts Tektronix 4014 format files to PostScript format
psplot	Converts plot files to PostScript format. Plot files are generated
psrev	Reverses page order or selects a range of pages for printing from a PostScript format file

5.5 Using the Print Spooling Subsystem as a Generic Spooling Subsystem

The AIX V4.1 print spooling subsystem is also a generic queueing and spooling system. It can be adapted to perform tasks that you wish to serialize. These sorts of requirements may exist if you have some resources that can only be used by a single user or process at a time, or if you wish to share a system's resources by serializing the use of facilities that make great demands on a resource. By way of example, we will show how to use the print spooling subsystem to run a C compile:

- Create a queue. To do this, enter `smit mkpq`. The following screen is displayed:

```
                              Add a Print Queue

Move cursor to desired item and press Enter. Use arrow keys to scroll.

  # ATTACHMENT TYPE      DESCRIPTION
    local                Printer Attached to Local Host
    remote               Printer Attached to Remote Host
    xstation             Printer Attached to Xstation
    ascii                Printer Attached to ASCII Terminal
    hpJetDirect          Network Printer (HP JetDirect)
    file                 File (in /dev directory)
    ena                  Printer or Plotter Attached to IBM 4033 LAN Con
    lex                  Printer Attached via TCP/IP to IBM Integrated N
    other                User Defined Backend

F1=Help                 F2=Refresh              F3=Cancel
F8=Image                F10=Exit                Enter=Do
/=Find                  n=Find Next
```

- In the previous screen select `other`. The following screen is displayed:

```
                              Add a Print Queue

Type or select values in entry fields.
Press Enter AFTER making all desired changes.

[TOP]                                                  [Entry Fields]
* Name of QUEUE to add                                [cc]
* Name of QUEUE DEVICE to add                         [ccd]
* BACKEND PROGRAM pathname                            [/u/a948r3/spoolcc]
  ACTIVATE the queue?                                  yes                      +
  Should this become the DEFAULT queue?                no                       +
  Queuing DISCIPLINE                                   first come first serve   +
  ACCOUNTING FILE pathname                             []                        /
  HOSTNAME of remote server                            []
  Name of QUEUE on remote server                       []
  Pathname of the SHORT FORM FILTER for queue          []                       +/
   status output
  Pathname of the LONG FORM FILTER for queue           []                       +/
   status output
  BACKEND OUTPUT FILE pathname                         []                        /
[MORE...5]

F1=Help             F2=Refresh          F3=Cancel           F4=List
F5=Reset            F6=Command          F7=Edit             F8=Image
F9=Shell            F10=Exit            Enter=Do
```

- Configure the queue by selecting a queue name, queue device name, and backend program as in the previous screen. You will note that the highlighted fields are the ones changed. In this case the following was specified:
  - Queue name was set to cc. This may be any name you wish as long as it is seven or less characters and unique.
  - Queue device name was set to ccd. This may be any name you wish as long as it is seven or less characters.

  - The name of the backend program that will process the queued request. In this case it has been called /u/a948r3/spoolcc.

- You will get an OK message from SMIT when the command has successfully completed. Exit SMIT.
- To validate that the queue has been correctly installed enter `qchk -A`. You should get a response such as the one below.

```
# qchk -A
Queue   Dev   Status    Job Files              User         PP %   Blks  Cp Rnk
------- ----- --------- --- ------------------ ---------- ---- -- ----- --- ---
4019gl  lp0   READY
4019pcl lp0   READY
4019ps  lp0   READY
4019ps  lp1   READY
psth    @gand READY
psth    psdup READY
psdup   ps403 READY
ascth   @gand READY
ascth   ascdu READY
ascdup  asc   READY
rasc    @gand READY
rasc    asc   READY
2380asc tty0  READY
xasc    p@tx1 READY
xgl     p@tx1 READY
xpcl    p@tx1 READY
xps     p@tx1 READY
cc      ccd   READY
```

- Create the shell script you wish to use. In our example we wanted to use the C compiler. We have, therefore, created the script below as /u/a948r3/spoolcc. This is the program we selected as a backend.

```
#!/bin/ksh
exec cc $1 -o"$1.out" 2> "$1.log"
```

Figure 35. An Example of a Shell Script to Use via the Spooler

  This simple script compiles the program you give it, writes the linked object to a file called filename.out and a log of any error messages to filename.log.

- To use this backend, you enqueue the file you want compiled using the queueing command of your choice. For example, `qprt -P cc tt.c` will compile the program tt.c. If the compile and link are successful, the tt.c.out file will be created. If errors occur, the tt.c.log file will be created with the error messages written into it.

The preceding example shows the use of the spooler to do something other than print files. The standard batch shell print queue may also be of use if you wish to serialize the use of large programs like compilers. The batch shell print queue is discussed in section 4.1.1.3, “Examples of Stanzas in the qconfig File” on page 48.

5.6 Customizing Header and Trailer Pages

If you choose to print header and/or trailer pages (burst pages), their format can be modified. The header and trailer format files are in the /usr/lib/lpd/pio/burst subdirectory. The header files are H.ascii, H.gl and H.ps. The trailer files begin with a T instead of an H. The three formats are ascii for ASCII, gl for the plotter, and ps for PostScript. For example, the default H.ascii file looks like this:

```
*########################################################################
*########################################################################
*########################################################################
*########################################################################



************************************************************************
************************************************************************
************************************************************************
%t  %T

%p  %P

%q  %Q

%h  %H

%s  %S

%d  =====> %D <=====

************************************************************************
************************************************************************

%a
%A

************************************************************************
************************************************************************
```

Figure 36. The Standard /usr/lib/lpd/pio/burst/H.ascii File

The variables prefixed with a % represent variables that can be extracted from the printing environment. These variables are used in all three burst page formats, although you will find each page format is different. The PostScript burst page is, for example, a PostScript program to generate the burst page. The values of the variables in the burst page format file are as follows:

```
%A  Specifies the formatting flag values
%D  Specifies the user to whom the print output is to be delivered
%H  Specifies the name of the host machine printing the job
%P  Specifies the time the print job was printed
%Q  Specifies the time the print job was queued
%S  Specifies the user who submitted the print job
%T  Specifies the title of the print job
%%  Specifies the % (percent sign)
%a  Set as FLAG VALUES:
%d  Set as DELIVER TO:
%h  Set as PRINTED AT:
%p  Set as TIME PRINTED:
%q  Set as TIME QUEUED:
%s  Set as SUBMITTED BY:
%t  Set as TITLE:
```

Figure 37. Values of Variables in Burst Page Format Files

If we wish to change the burst page format, we can edit the format file. For example, modify the H.ascii file as follows.

```
*****************************************************************
*****************************************************************

     #####   #####    #    #    #   #####   ####   #    #   #####
    #    #  #    #   #    ##   #     #    #    #  #    #     #
   #    #  #    #   #    # #  #     #    #    #  #    #     #
  #####   #####    #    #  # #     #    #    #  #    #     #
 #       #   #    #    #   ##     #    #    #  #    #     #
#       #    #   #    #    #     #     ####    ####      #

*****************************************************************
*****************************************************************
%h  %H

%s  %S
*****************************************************************
%d  =====> %D <=====
*****************************************************************

%t  %T

%p  %P

%q  %Q

*****************************************************************
*****************************************************************
*****************************************************************
*****************************************************************
```

If you wish to create a new header perhaps called H.a2 for use with a specific printer, called quiet for example, then you need to:

1. Copy the nearest appropriate header or trailer format file to H.a2.
2. Modify H.a2 as you require.
3. Assuming a virtual printer for the printer quiet exists you have to edit the sh attribute in the virtual printer database for the printer in question. You need to find the sh attribute in the /usr/lib/lpd/pio/custom file for your printer. You can

change the burst page file name by editing this line and changing H.ascii to H.a2. Below is an example of the sh attribute line. You can see H.ascii part way along the line. It is probably best to edit this file as use of the `smit lsvirprt` would require you to re-key the entire line.

Note: line has been split for formatting

```
:321:sh::%Ide/pioburst %F[H] %Idb/H.ascii │
%Ide/pioformat -@%Idd/%Imm -!%Idf/piof420x -q1 -J! -L! %IsH
```

4. Run `piodigest` to digest the modifications to the custom file by using the `lsvirprt` command, but without actually changing any attributes.

5.7 Printer and Plotter Tips and Hints

In this section we will discuss printer and plotter tips and hints.

5.7.1 Printer Specific Information

The following information may be useful when configuring certain printers on AIX:

IBM 3812 Model 2 Pageprinter The AIX Font Diskette, Feature Code #3155, must be installed in the printer's diskette drive for this printer to function correctly.

IBM 3816 Page Printer The AIX Font Diskette, Feature Code #7652, must be installed in the printer's diskette drive for this printer to function correctly.

IBM 4019 Laser Printer The system will select IBM ASCII, HP LaserJet II Emulation or the Plotter Emulation data stream without intervention.

IBM 4216 Personal Pageprinter, Model 031 The switches on the back of the printer must be set for Automatic Emulation Switching, as specified in Appendix B of the *Personal Page Printer II Model 031 Guide to Operations* manual.

IBM 5202 Quietwriter III Although this printer detects the presence of a font cartridge, the RISC System/6000 does not. If any of the following are present then AIX needs to be informed:

- If a font cartridge is installed that includes a font in code page 850
- If the user wants to print using the font
- If the user needs to print characters unique to code page 850 (European characters)

To update AIX about the font cartridge use `smit lsvirprt`, select `Printer Setup` and change the CODE PAGE 850 available from no to yes.

Texas Instruments OmniLaser 2115 Page Printer Automatic selection of the printer data stream (PostScript, HP LaserJet+, Diablo 630, TI 855 Plotter) is not supported. The data stream must be selected manually, using the control panel. For the TI 855 software interface, only DP mode is supported. WP mode is not supported.

Printronix P9012 Line Printer** Only the Serial Matrix command set is supported. The P-Series command set is not supported.

Dataproducts LZR 2665 Laser Printer The data stream (PostScript, Diablo 630) must be selected manually, using the control panel.

5.7.2 Suppliers of Cables

It is recognized that cables are often required at very short notice and that customers may want to make their own. For this reason, the cable specifications for most RISC System/6000 cables are described in the *RISC System/6000 System Overview and Planning* (GC23-2406).

5.7.3 Printer Troubleshooting

In this section we will discuss printer troubleshooting.

5.7.3.1 Local Printer Problem Checklist

The following list is a series of checks that can be made when the printing is not performing as desired.

- Verify that the qdaemon is running, and that there are no qdfork processes.
- Verify that the system date is correct. The qdaemon automatically rebuilds the qconfig.bin when the qconfig is modified. If the date on the qconfig is earlier than the date on the qconfig.bin, then the qconfig will not be digested even if it has just been edited.
- Check if the dates are correct and the changes made to /etc/qconfig are correct.
- If a message refers to No Virtual Printers Defined or printing will not work from InfoExplorer, ensure that /tmp is not full.
- If messages from the print commands are being used for operator attention and are not working, ensure that the socket is connected and verify that the hostname can be pinged. The messages are routed through writeserv of TCP/IP.
- If messages are not working properly, to see if the `writesrv` is running, type:

  ```
  lssrc -s  writesrv
  ```

  If it is not running, start it with:

  ```
  startsrc -s writesrv
  ```

  Finally, ensure that the `writesrv` is listed in the output of:

  ```
  netstat -a | pg
  ```

5.7.3.2 Remote Printing Problem Checklist

For the remote printing server:

- Ensure client machines are all listed in /etc/hosts.lpd
- Ensure TCP/IP is running
- Ensure /usr/spool/lpd exists
- Ensure /etc/locks/lpd does not exist

- Ensure that lpd and the qdaemon are running
- Review section 5.7.3.1, “Local Printer Problem Checklist” on page 105.

For the remote printing client:

- Ensure that the queue name and server name are correct in /etc/qconfig
- Ensure TCP/IP is running
- Ensure that the qdaemon is running

5.7.3.3 16-Port RS-232 Adapter

The IBM 16-port adapter does not support CTS (Clear to Send). If a printer is connected to this device and the printer is powered off, while a job is printing, the job will not finish printing. The job will have to be restarted or deleted manually in this instance.

5.7.4 Using Messages to a Printer Operator

Messages may be used to inform a printer operator when some action on the part of the operator is required before a job can be printed. For example, a user may require a specific print form or a differently colored paper to be loaded. Messages can be included in the print job using the `-m` or `-M` flags with `qprt` command for example. If a job is sent to a printer with a message, it is queued and will issue the operator a message when it is ready to print. The printer status will then be OPR_WAIT. This indicates that the job is waiting for an operator response before proceeding.

To help clarify the use of this facility, lets look at an example where a user would like a print job printed on pink paper. To facilitate this, the user must:

1. Create a standard message file that is sent to the operator when pink paper is required. To do this use your favorite editor to create a file. In our case the file will be /u/a948r3/message. The contents of /u/a948r3/message are:

```
Please change to pink paper for this job
```

2. Now, to print the file called pink.stuff you issue the following command:

```
# qprt -M /u/a948r3/message  pink.stuff
```

When a user has enqueued a print request using a message like the one below a message will be sent to the console of the system. It will look something like the message below.

```
Message from root on canberra (pts/0) [Tue Apr 23 14:16:08 1991] ...
        To reply, enter:  write -h 3,ok|cancel|query

0781-148 Message from host canberra user root...

* Please change to pink paper for this job
<EOT>
```

Figure 38. Console Message Sent Using qprt -M

The operator will now have to perform the following procedure:

- Take the appropriate queue down (`enq -D`). This allows the current job to finish printing before stopping the queue.
- Next, the operator changes the paper to pink.
- The operator should then respond to the message with `write -h 3,ok` and the job will print. The operator will then need to change the paper back. Alternately, the operator may cancel the job.
- The queue can then be brought up again using `enq -U`.

5.7.5 Messages from the Print Spooling Subsystem

There are two major types of printer messages found in AIX V4.1. There are those associated with user requests, such as those discussed in section 5.7.4, “Using Messages to a Printer Operator” on page 106, and those associated with printer error conditions. Messages requesting *intervention* by an operator or systems administrator are usually caused by conditions such as paper out, printer timeout, or other operation occurrences. These messages are sent to the originator by default. This option can be easily modified to include an administrator. This is accomplished by changing the virtual printer and editing the si attribute.

To change the virtual printer's message sending behavior, type `lsvirprt`.

Select the printer to modify, type `si`, and then press Enter to display the current settings. If the value is null (nothing is displayed), then the submitter is the only user to receive the message. To change this setting so that the submitter and jay receive the message, type `si=,jay` and press Enter.

Set the value of the si attribute to a particular user, for example mkj, by typing `si=mkj` when running chvirprt. Note that this attribute is set in the virtual printer database; therefore, you may select different users to be notified of the need for intervention for different printers.

Note: It is also possible to have messages sent to you via mail rather than as a message on a display. This is done, for example, by using the `qprt -C` command. The si attribute only works for intervention messages.

5.7.6 6150 Client to RISC System/6000 Server

When using the 6150 (RT*) as a remote printing client to a RISC System/6000 server, ensure that the following line is in the /etc/qconfig stanza on the 6150:

```
naix = true
```

This will prevent non-BSD flags from being sent to the RISC System/6000 server.

5.7.7 Printing the Contents of an X-Window

Many users of the RISC System/6000 will use the X-Windows environment as a primary user interface. It is possible to capture a window and print it to a suitable printer. This is done using the `xwd` and `xpr` commands. Below is an example of how this can be done:

1. Select the window to print. In this example we have selected the xdpsclock window.
2. Ensure that the window of choice is not overlapped by other windows, pop-up menus etc. The window capture program works by capturing a portion of the pixmap held by the X server in the box defined by the window boundaries.
3. Enter the following command:

   ```
   xwd -xy | xpr -device 3812 -width 2 | qprt -Plp0
   ```

   The cursor on your X display will become a cross. You must move it to the window you want printed and press the left mouse button.

   The command above does the following:

   - The `xwd` command selectes the window to be printed via interaction with the user. The `-xy` option is required when used with `xpr`. It produces a xy format dumping and selects only the first plane of the pixmap for printing. The default for `xwd` is to output to standard output. We have piped this output into the `xpr` command.
   - The `xpr` command formats the window dump generated by xwd for printing on a specified printer. The `-device` option selects an IBM 3812 printer for output in this case. The other options available for -device are 5201, 5202 and ps (PostScript). The default output for `xpr` is standard output so we pipe this to the `qprt` command. When using `xpr` it is a good idea to specify a picture size; otherwise, the picture will be scaled to the maximum size that will fit the page. For this reason we have also used the `-width` option.
   - The `qprt` command spools the output from `xpr` to the lp0 queue, which in this case was serviced by an IBM 3812 printer connected to a remote server.
4. The xdpsclock will now be printed on a 3812 printer. The output will look like:

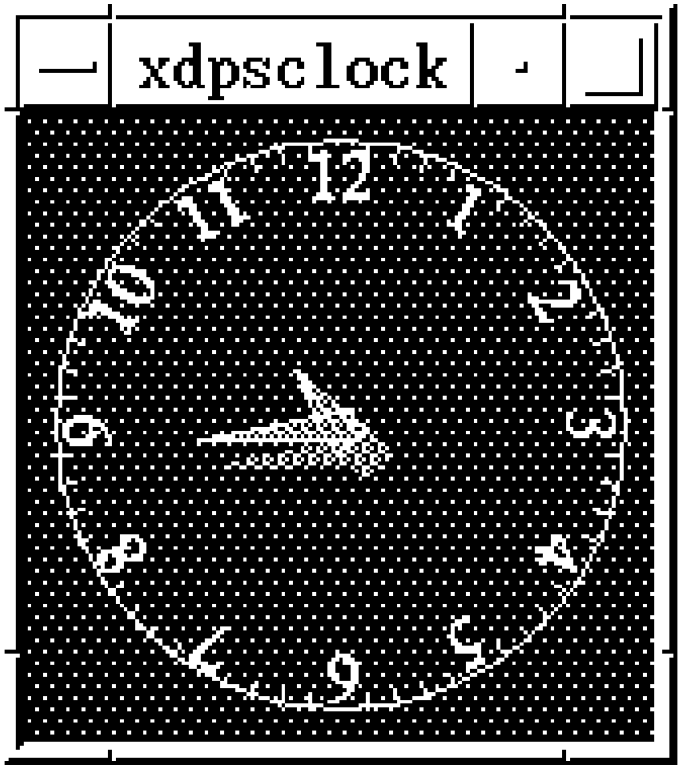

Figure 39. Printing Output on 3812

Chapter 6. Network Printing Options

In the modern computing environment it is common place to share valuable resources such as high quality printers or large format plotters among many systems and users. In the AIX environment, a systems administrator can configure a print server to serve print requests from other systems. This section discusses how to configure and manage printers in the remote printing environment.

6.1.1 An Overview of Remote Printing

Figure 40 on page 112 gives an overview of the manner of remote printing functions. The first thing of note, when you review Figure 40 on page 112, is that remote printing jobs must pass through the print spooling subsystem of both the client and the server systems.

© Copyright IBM Corp. 1991, 1994

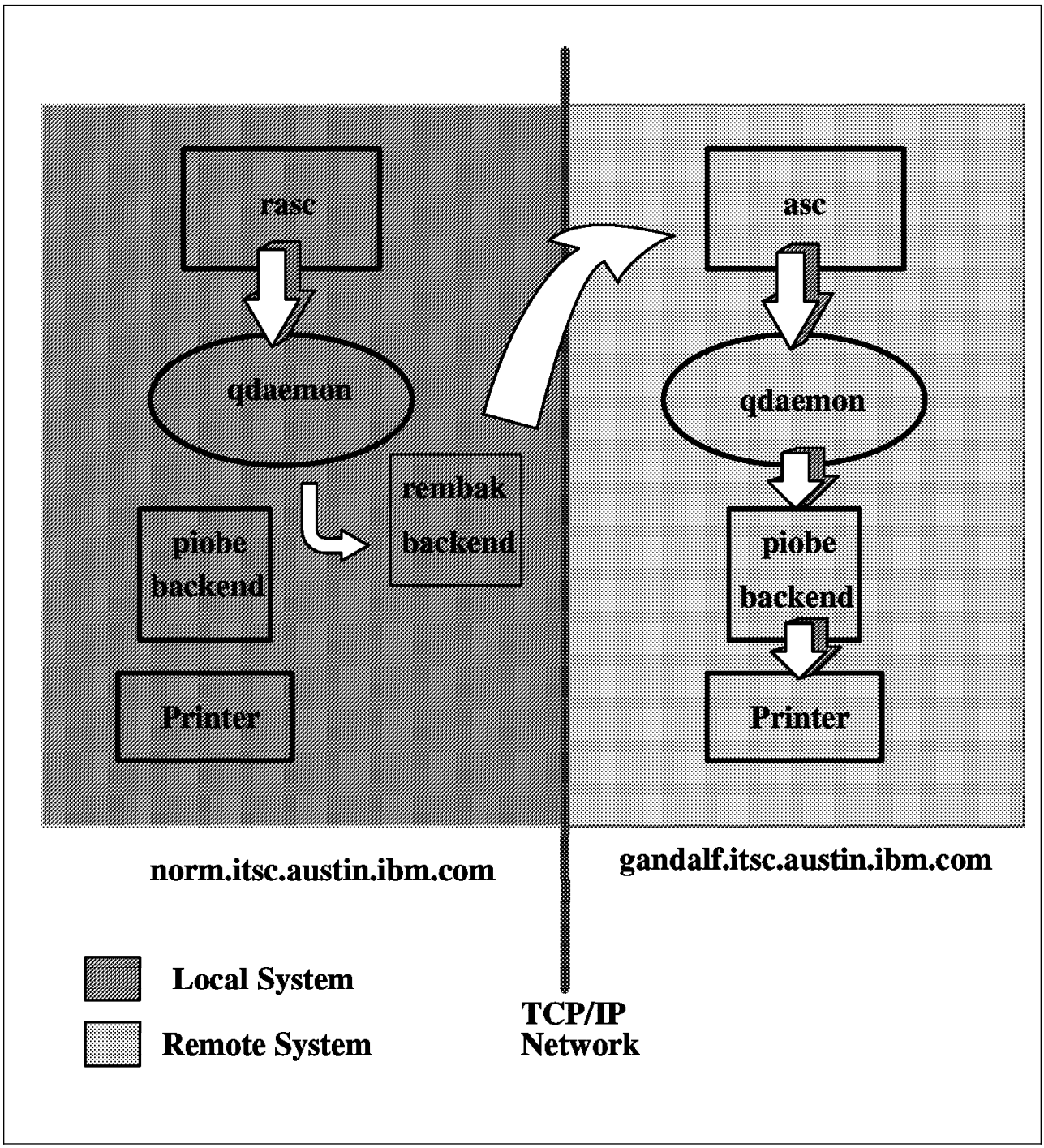

Figure 40. An Overview of Remote Printing

When the print request is submitted, it is queued in the same manner as a local print job. In the example in Figure 40 the job is queued on the local queue, rasc. The qdaemon process on norm processes the print request as it would process any job queued locally. The difference, in the case of a remote print job, is that the queue device that is used to process the job uses the rembak backend program rather than piobe.

The rembak program will transmit the print job to a remote print server, which in Figure 40 is gandalf. The rembak program converses with the lpd daemon on the

print server. In the example, the queue device, rascd, invokes rembak to send the print request to the host, gandalf. The lpd daemon on the print server, gandalf, receives the print job sent to it and places it on the appropriate local queue. The print job is now processed just like any other local job. In the example, the print job is placed on the asc queue because this queue was requested in the `qprt` command by the use of the `-r` flag.

The print job will now be printed on a printer connected to gandalf.

6.1.1.1 The Role of the rembak Program

The use of remote printers presents a change in the way print jobs are processed. As a result, this changes the way some print related commands and facilities work. The major change is that once a job has been transmitted to the remote host, it is no longer managed by the print spooling subsystem on your local system. As you can imagine, commands like `qchk`, that query the status of print queues and printers, must behave in a different way.

To facilitate these changes, the rembak backend can do more than just send the print request to the remote printer. The rembak program can send a request to a remote server. The request can be a print job, a status request, a job cancel request, or a request to kill the remote queuing system.

When you have configured your remote printing environment and issue, the `qchk -A`, `enq -A` or `lpstat` commands, things now work differently. First, `qchk` will query the status of local print queues and printers by analyzing the qconfig file and print spooling subsystem status files. The command will also use rembak to request queue status information from the print server(s). As a result, the response from `enq -A` will now look like:

```
# enq -A
Queue   Dev   Status    Job Files              User         PP %   Blks  Cp Rnk
------- ----- --------- --- ------------------ ---------- ---- -- ----- --- ---
4019asc lp0   READY
4019gl  lp0   READY
4019pcl lp0   READY
4019ps  lp0   READY
psth    @gand READY
psth    psdup READY
psdup   ps403 READY
rasc    @gand READY
rasc    asc   READY
ascdup  asc   READY
7372gl  lp1   READY
```

You will note that there are two entries for the remote rasc queue. The first is the status of the local queue, and the second is the status of the remote queue: asc. Under normal circumstances, the rembak command is called by the qdaemon command. It is not intended to be entered on the command line by a user. If executed from the command line, it may bring the remote queue down, so its use in this manner should be avoided.

6.1.1.2 Remote Printing and the qconfig File

To configure remote printers, the qconfig stanza for the queue device features some entries that differ from those used for local printers. These entries relate to some of the unique features of a remote printer queue device. The variations in the qconfig queue stanzas for remote printing are:

- For the host field:
  - Example: `gandalf`. The name of the remote host where jobs will be printed. This presumes that your TCP name resolution environment can identify the host name used.
- For the rq field:
  - Example: `asc`. The name of the remote queue on which jobs will be printed.
- For the s_statfilter field:
  - Example: `/usr/lpd/aixshort`. The filter used to translate remote queue status information into a short form for presentation via commands such as `qchk`.
  - Example: `/usr/lpd/aixshort`. It is the default value used when the remote print server is another AIX machine.
  - Example: `/usr/lpd/bsdshort`. For translating BSD `lpq` command output when using a BSD print server.
  - Example: `/usr/lpd/attshort`. For translating AT&T** `lpstat` command output when using an AT&T print server.
  - Example: `/usr/lpd/aixv2short`. For translating AIX 2.2.1 `print -q` command output when using an RT running AIX 2.2.1 as a print server.
- For the l_statfilter field:
  - Example: `/usr/lpd/aixlong`. The filter used to translate remote queue status information into a long form for presentation via commands such as `qchk`.
  - Example: `/usr/lpd/aixlong` It is the default value used when the remote print server is another AIX system.
  - Example: `/usr/lpd/bsdlong`. For translating BSD `lpq` command output when using a BSD print server.
  - Example: `/usr/lpd/attlong`. For translating AT&T `lpstat` command output when using an AT&T print server.
  - Example: `/usr/lpd/aixv2long`. For translating AIX 2.2.1 `print -q` command output when using an RT running AIX 2.2.1 as a print server.

The following screen shows an example of `host` and `rq` entries:

```
rasc:
       device = @gandalf
       up = TRUE
       host = gandalf.itsc.austin.ibm.com
       s_statfilter = /usr/lib/lpd/aixshort
       l_statfilter = /usr/lib/lpd/aixlong
       rq = rasc
@gandalf:
       backemd = /usr/lib/lpd/rembak
```

6.1.1.3 The Remote Print Server - The lpd Daemon

The lpd daemon is a TCP/IP based, remote print server facility. It monitors port 515 for print requests. Each request is placed upon the specified queue or the default queue. The file to be printed is placed in the /usr/spool/lpd directory. Any TCP system can place a request on any host for printing services. Therefore, as a security feature, the lpd daemon accepts print requests only from remote hosts that are listed in the local /etc/hosts.equiv or /etc/hosts.lpd file.

The following example displays the entry for norm in gandalf's /etc/hosts.lpd file:

```
# Lines beginning with a '#' character and blank lines are ignored.
#
# Examples:
#
# host                  allows access to all users on host
# -host                 denies access to all users on host
# +@group               allows access to all users on hosts in group
# -@group               denies access to all users on hosts in group
129.35.22.163 thiessen
9.3.1.28 bob4
9.3.1.8 norm
9.3.1.79 gandalf
```

The following panel displays the entry for norm in gandalf's /etc/hosts.equiv file:

```
# Lines beginning with a '#' character and blank lines are ignored.
#
# Examples:
#
# host user             allows access to user on host
# + user                allows access to user on any host
# host -user            denies access to user on host
# -host                 denies access to all users on host
# -@group               denies access to all users on hosts in group
# +@group1 +@group2     allows access to users in group2 on hosts in group1
thiessen
bob4
norm
gandalf
```

You can place an entry such as norm found in hosts.lpd file in the /etc/hosts.equiv file. When the host name is defined in the /etc/hosts.equiv file, the user has more access rights than just those associated with printing. Commands such as `rlogin` and `rsh` use the hosts.equiv file for access control.

The /etc/locks/lpd file contains the process ID of the currently running instance of the lpd daemon. If the current machine becomes inoperable (the error message displayed is lpd: lock file or duplicate daemon) you may need to remove the ID for the lpd daemon when the system starts again.

6.1.2 Controlling the lpd Daemon

The lpd daemon can be controlled either via SMIT or by the System Resource Controller (SRC).

6.1.2.1 Controlling the lpd daemon via SMIT

The `smit lpd` command invokes the following screen.

```
                              Manage Print Server

Move cursor to desired item and press Enter.

  List all Remote Clients with Print Access
  Add Print Access for a Remote Client
  Remove Print Access for a Remote Client
  Start the Print Server Subsystem (lpd daemon)
  Stop the Print Server Subsystem
  Show Status of the Print Server Subsystem



F1=Help             F2=Refresh          F3=Cancel           F8=Image
F9=Shell            F10=Exit            Enter=Do
```

From this panel you can perform the following tasks:

- List all remote clients with print access
- Add print access for a remote client
- Remove print access for a remote client
- Start the print server subsystem (lpd daemon)
- Stop the print server subsystem
- Show the status of the print server subsystem

6.1.2.2 Adding Print Access for a Remote Client

To add print access for a remote client follow these steps:

1. Enter `smit lpd`
2. Select `Add Print Access for a Remote Client`
3. Fill the required fields as follows:

```
                    Add Print Access for a Remote Client

Type or select values in entry fields.
Press Enter AFTER making all desired changes.

                                                      [Entry Fields]
* Name of REMOTE CLIENT                              [norm.itsc.austin.ib>
  (Hostname or dotted decimal address)



F1=Help             F2=Refresh          F3=Cancel           F4=List
F5=Reset            F6=Command          F7=Edit             F8=Image
F9=Shell            F10=Exit            Enter=Do
```

4. Press Enter

6.1.2.3 Removing Print Access for a Remote Client

To remove print access for a remote client follow these steps:

1. Enter `smit lpd`
2. Select `Remove Print Access for a Remote Client`
3. Fill the required fields as follows:

```
                  Remove Print Access for a Remote Client

Type or select values in entry fields.
Press Enter AFTER making all desired changes.

                                                      [Entry Fields]
* Name of REMOTE CLIENT                              [norm.itsc.austin.ib> +



F1=Help             F2=Refresh          F3=Cancel           F4=List
F5=Reset            F6=Command          F7=Edit             F8=Image
F9=Shell            F10=Exit            Enter=Do
```

4. Press Enter

6.1.2.4 Starting the Print Server Subsytem

To start the print server subsystem follow these steps:

1. Enter `smit lpd`
2. Select `Start the Print Server Subsystem (lpd daemon)`
3. For starting the subsystem at this moment and on system restart, select both from the following panel:

```
                        Start the Print Server Subsystem

Type or select values in entry fields.
Press Enter AFTER making all desired changes.

                                                      [Entry Fields]
  Start subsystem now, on system restart, or both    [both]        +
  TRACE lpd daemon activity to syslog?               [no]                    +
  EXPORT directory containing print attributes?      [no]                    +

  Note:
  Exporting this print server's directory
  containing its print attributes will allow
  print clients to mount the directory.  The
  clients can use this server's print attributes
  to display and validate print job attributes
  when starting print jobs destined for this
  print server.  Note that the Network File
  System (NFS) program product must be installed
  and running.


F1=Help             F2=Refresh          F3=Cancel           F4=List
F5=Reset            F6=Command          F7=Edit             F8=Image
F9=Shell            F10=Exit            Enter=Do
```

4. Press Enter

6.1.2.5 Stopping the Print Server Subsytem

To stop the print server subsystem follow these steps:

1. Enter `smit lpd`
2. Select `Stop the Print Server Subsystem`
3. For stopping the subsystem at this moment and on system restart, select both from the following panel:

```
                        Stop the Print Server Subsystem

Type or select values in entry fields.
Press Enter AFTER making all desired changes.

                                                      [Entry Fields]
  Stop subsystem now, on system restart, or both     [both]        +


F1=Help             F2=Refresh          F3=Cancel           F4=List
F5=Reset            F6=Command          F7=Edit             F8=Image
F9=Shell            F10=Exit            Enter=Do
```

4. Press Enter

6.1.2.6 Showing the Status of the Print Server Subsystem

To show the status of the print server subsystem follow these steps:

1. Enter `smit lpd`
2. Select `Show Status of the Print Server Subsystem`

   The following panel will appear:

```
                                COMMAND STATUS

Command: OK            stdout: yes           stderr: no

Before command completion, additional instructions may appear below.

Subsystem         Group            PID     Status
 lpd              spooler          10862   active




F1=Help             F2=Refresh          F3=Cancel           F6=Command
F8=Image            F9=Shell            F10=Exit            /=Find
n=Find Next
```

6.1.2.7 Controlling the lpd Daemon via the SRC

Under the SRC the lpd daemon is a member of the TCP/IP group, and must be running to support remote print requests.

Use the following SRC commands to manipulate the lpd daemon:

startsrc Starts a subsystem, group of subsystems, or a subserver

stopsrc Stops a subsystem, group of subsystems, or a subserver

refresh Causes the subsystem or group of subsystems to reread the appropriate configuration file

traceson Enables tracing of a subsystem, group of subsystems, or a subserver

tracesoff Disables tracing of a subsystem, group of subsystems, or a subserver

lssrc Gets the status of a subsystem, group of subsystems, or a subserver

6.1.2.8 Examples of Using the SRC to Control the lpd Daemon

The following examples show how to start lpd and are only used when currently running.

1. To start the lpd server daemon, enter:

```
# startsrc -s lpd
0513-059 The lpd Subsystem has been started. Subsystem PID is 10058.
```

2. To start the lpd server daemon with the debugging option, enter:

```
# startsrc -s lpd -a "-d"
0513-059 The lpd Subsystem has been started. Subsystem PID is 8784.
```

   The `-d` flag sends debugging information to the `syslogd` command.

3. To send logging information to the stderr daemon, enter:

```
# startsrc -s lpd -a "-l"
0513-059 The lpd Subsystem has been started. Subsystem PID is 15559.
```

The `-l` flag sends logging information to the `syslogd` command.

The /etc/locks/lpd file contains the PID of the currently running lpd daemon. After a system crash, this PID may need to be deleted. The following error message indicates the problem:

```
lpd: lock file or duplicate daemon
```

6.1.3 Using and Managing Remote Printers

The following sections will describe:

- Adding a remote print queue
- Configuring the print server
- Sending files across the network to a system printer
- Displaying the status of jobs sent across the network
- Deleting a job from a remote queue

6.1.3.1 Configuring a Remote Printer

In the procedure that follows, we will use as the local host norm used as an example in Figure 40 on page 112. As shown in Figure 40 on page 112 norm will be the local host (the host where the remote queue is to be configured), and gandalf will be the system which has the print device attached (the remote host).

The first step in configuring remote printers is to configure a remote queue and queue device on the local host (norm in the example).

6.1.3.2 Configuring a Remote Print Queue

To set up the remote queue (rlp), used in Figure 40 on page 112, perform the following tasks at the local host (norm).

1. Create the remote queue using the `smit mkrque` command.

```
# smit mkrque
```

2. Select `remote` from the following panel:

```
                          Add a Print Queue

Move cursor to desired item and press Enter. Use arrow keys to scroll.

  # ATTACHMENT TYPE      DESCRIPTION
    local                Printer Attached to Local Host
    remote               Printer Attached to Remote Host
    xstation             Printer Attached to Xstation
    ascii                Printer Attached to ASCII Terminal
    hpJetDirect          Network Printer (HP JetDirect)
    file                 File (in /dev directory)
    ena                  Printer or Plotter Attached to IBM 4033 LAN Con
    lex                  Printer Attached via TCP/IP to IBM Integrated N
    other                User Defined Backend

F1=Help                 F2=Refresh              F3=Cancel
F8=Image                F10=Exit                Enter=Do
/=Find                  n=Find Next
```

3. Select `Standard processing` from the following panel:

```
                       Type of Remote Printing

Move cursor to desired item and press Enter.

  Standard processing
  Standard with NFS access to server print queue attributes
  Local filtering before sending to print server

F1=Help                 F2=Refresh              F3=Cancel
F8=Image                F10=Exit                Enter=Do
/=Find                  n=Find Next
```

4. Fill the required fields as follows:

```
                    Add a Standard Remote Print Queue

Type or select values in entry fields.
Press Enter AFTER making all desired changes.

                                                      [Entry Fields]
* Name of QUEUE to add                               [rasc]
* HOSTNAME of remote server                          [gandalf]
* Name of QUEUE on remote server                     [asc]
  TYPE of print spooler on remote server              AIX Version 3 or 4      +
  DESCRIPTION of printer on remote server            [ascii queue at gandalf]



F1=Help             F2=Refresh          F3=Cancel           F4=List
F5=Reset            F6=Command          F7=Edit             F8=Image
F9=Shell            F10=Exit            Enter=Do
```

5. After filling the previous panel the following stanzas will be created:

```
rasc:
        device = @gandalf
        up = TRUE
        host = gandalf.itsc.austin.ibm.com
        s_statfilter = /usr/lib/lpd/aixshort
        l_statfilter = /usr/lib/lpd/aixlong
        rq = asc
@gandalf:
        backend = /usr/lib/lpd/rembak
```

6.1.3.3 Starting a Print Queue

To start a print queue follow these steps:

1. Enter the following command:

```
# smit qstart
```

2. Fill the required fields as follows:

```
                              Start a Print Queue

Type or select a value for the entry field.
Press Enter AFTER making all desired changes.

                                                      [Entry Fields]
* PRINT QUEUE name                                   [rasc]                +




F1=Help             F2=Refresh          F3=Cancel           F4=List
F5=Reset            F6=Command          F7=Edit             F8=Image
F9=Shell            F10=Exit            Enter=Do
```

   Choose the remote queue that you have configured. You may use the F4 key to list all available queues.

3. Press Enter

   The command ran and the screen returned with an OK indicating successful completion of the command.

6.1.3.4 Configuring a Remote Host as a Print Server

As mentioned in section 6.1.3.2, “Configuring a Remote Print Queue” on page 120, the assumption has been made that the asc print queue is up and running and has a valid queue device defined. We can now configure that system, gandalf, to accept remote print requests.

The /etc/hosts.lpd file defines which remote systems are permitted to print on the local system. The remote systems listed in this file are not given the full privileges given to systems listed in the /etc/hosts.equiv file. The format of the hosts.lpd file is a simple list of host names.

If the host that desires to use a remote printer has not been defined in a remote host's /etc/hosts.equiv or /etc/hosts.lpd file, the error: `rasc: lpd: your host does`

`not have line printer access` will be displayed when checking the remote queue status.

To configure gandalf to act as a print server for norm you must perform the following actions:

1. Add the name norm to the /etc/hosts.lpd file of gandalf. Enter the following command:

```
# smit mkhostslpd
```

2. Fill the required fields as follows:

```
                    Add Print Access for a Remote Client

Type or select values in entry fields.
Press Enter AFTER making all desired changes.

                                                      [Entry Fields]
* Name of REMOTE CLIENT                              [norm.itsc.austin]
  (Hostname or dotted decimal address)




F1=Help             F2=Refresh          F3=Cancel           F4=List
F5=Reset            F6=Command          F7=Edit             F8=Image
F9=Shell            F10=Exit            Enter=Do
```

   In the example above, gandalf is being added to the /etc/hosts.lpd file.

3. To service print requests, the print server gandalf must have its lpd process running. You can check to see if the print server is running by entering the `lssrc -s lpd` command.

```
# lssrc -s lpd
Subsystem         Group            PID     Status
 lpd              spooler         10862    active
```

   If the response from the `lssrc` command shows the status of lpd as active then your lpd daemon is already running. If it is not running it must be started by using the `startsrc` command or by using SMIT. In this instance we will use the `smit mkitab` command.

```
# smit mkitab
```

4. Fill in Start subsystem now, on system restart, or both field as follows:

```
#
#
                        Start the Print Server Subsystem

Type or select values in entry fields.
Press Enter AFTER making all desired changes.

                                                      [Entry Fields]
  Start subsystem now, on system restart, or both   [both]        +
  TRACE lpd daemon activity to syslog?               [no]                      +
  EXPORT directory containing print attributes?      [no]                      +

  Note:
  Exporting this print server's directory
  containing its print attributes will allow
  print clients to mount the directory.  The
  clients can use this server's print attributes
  to display and validate print job attributes
  when starting print jobs destined for this
  print server.  Note that the Network File
  System (NFS) program product must be installed
  and running.


F1=Help             F2=Refresh          F3=Cancel           F4=List
F5=Reset            F6=Command          F7=Edit             F8=Image
F9=Shell            F10=Exit            Enter=Do
```

Choosing this option starts the lpd daemon now and will also start it each time the system is booted. If the option is selected as shown, an entry will be added to the /etc/inittab file, which causes the daemon to start automatically when booted. The /etc/inittab entry is displayed below:

```
cron:2:respawn:/usr/sbin/cron
piobe:2:wait:/usr/lib/lpd/pio/etc/pioinit >/dev/null 2>&1  # pb cleanup
cons:0123456789:respawn:/usr/sbin/getty /dev/console
qdaemon:2:wait:/usr/bin/startsrc -sqdaemon
writesrv:2:wait:/usr/bin/startsrc -swritesrv
uprintfd:2:respawn:/usr/sbin/uprintfd
infod:2:once:startsrc -s infod
lpd:2:once:/usr/bin/startsrc -s lpd
```

After choosing this option, you should not choose it again unless you have changed the startup of the daemon at boot time. If you choose this selection a second time, the following message is displayed:

```
                                COMMAND STATUS

Command: OK            stdout: yes           stderr: yes

Before command completion, additional instructions may appear below.

0513-029 The lpd Subsystem is already active.
Multiple instances are not supported.
/usr/sbin/mkitab: ident entry found in /etc/inittab



F1=Help             F2=Refresh          F3=Cancel           F6=Command
F8=Image            F9=Shell            F10=Exit            /=Find
n=Find Next
```

6.1.3.5 Printing on Remote Printers

Now that a remote print queue has been defined, you should test that it is configured properly by sending a job to the remote printer and verifying that it makes it across the network. When jobs are queued on a remote system, the job number is the same on both systems. This section will describe how to send jobs to a remote printer, and the following section will describe how to verify that the job was queued at the remote host.

You may use any of the print commands, which allow you to specify the queue, to print to a remote printer. The following example explains how it is done using SMIT.

To use SMIT, follow these steps:

1. Enter the following command:

```
# smit qprt
```

2. In the following panel enter the name of the queue as follows, or use F4 key to select a queue from the list. In this case we are using F4 from the following panel to select the queue we want to use:

```
                                Start a Print Job

Type or select a value for the entry field.
Press Enter AFTER making all desired changes.

                                                      [Entry Fields]
  PRINT QUEUE name                                   []                        +



F1=Help             F2=Refresh          F3=Cancel           F4=List
F5=Reset            F6=Command          F7=Edit             F8=Image
F9=Shell            F10=Exit            Enter=Do
```

3. Select the rasc queue as follows:

```
                              PRINT QUEUE name

    Move cursor to desired item and press Enter. Use arrow keys to scroll.

      # PRINT QUEUE[:PRINTER]      DESCRIPTION
        4019ascii                  ibm4019 (ASCII)
        4019gl                     ibm4019 (GL Emulation)
        4019pcl                    ibm4019 (PCL Emulation)
        4019ps                     ibm4019 (PostScript)
        psth                       Gandalfs
        ascth                      ascdup on gandalf, asc on thiessens
        rasc                       ascii queue at gandalf
        2380ascii                  IBM 2380 Plus printer (Model 2)
        4019ps:lp0                 ibm4019 (PostScript)
        4019ps:lp1                 ibm4039 (PostScript)

    F1=Help                F2=Refresh             F3=Cancel
    F8=Image               F10=Exit               Enter=Do
    /=Find                 n=Find Next
```

4. Enter the name of the file to print as follows:

```
                              Start a Print Job

Type or select values in entry fields.
Press Enter AFTER making all desired changes.

                                                      [Entry Fields]
  Print queue name                                    rasc
* Name of FILE to print                              [/etc/qconfig]
  NUMBER of copies                                    [1]                  +
  REMOVE FILE from system after sending job           no                   +
     to remote print server?
  SEPARATOR PAGES                                     none                 +
  'DELIVER TO' TEXT                                   []
  MAIL MESSAGES instead of displaying them?           no                   +



F1=Help             F2=Refresh          F3=Cancel           F4=List
F5=Reset            F6=Command          F7=Edit             F8=Image
F9=Shell            F10=Exit            Enter=Do
```

5. Press Enter

In this example, the file to print, /etc/qconfig, is enqueued on the remote print queue configured earlier. The file should be in the current directory or else the absolute pathname is required.

6.1.3.6 Displaying Remote Print Job Status

To display the status of a print queue enter the following command:

```
# enq -A
```

The next screen displays the status of a remote print job at the local host (norm).

```
Queue   Dev   Status    Job Files              User         PP %   Blks  Cp Rnk
------- ----- --------- --- ------------------ ---------- ---- -- ----- --- ---
4019asc lp0   READY
4019gl  lp0   READY
4019pcl lp0   READY
4019ps  lp0   READY
4019ps  lp1   READY
psth    @gand READY
psth    psdup READY
psdup   ps403 READY
ascth   @gand READY
ascth   ascdu READY
ascdup  asc   READY
rasc    @gand READY
rasc    asc   READY       1  /etc/config         root@norm    1  1    1    1   1
2380asc tty0  READY
#
```

Notice that in the User column the user ID as well as the host ID are displayed. Also, the queue name displayed is that of the local host, but the queue device is that of the remote host.

The next screen shows what is displayed at the remote host, after queueing:

```
# lpstat

Queue   Dev   Status    Job Files              User         PP %   Blks  Cp Rnk
------- ----- --------- --- ------------------ ---------- ---- -- ----- --- ---
lp0     lp0   READY
os2ps   os2   READY
os2asc  lan   READY
lab1    lab1  READY
cps     4079  READY
psdup   psdup READY
psdup   ps403 READY
ascdup  ascdu READY
ascdup  asc   READY
asc     ganda DEV_BUSY  136 /etc/qconfig       root@norm              2   1   1
ps      n4019 RUNNING   135 /tmp/aix4ov.f.Baa0 a948r11       0 100   250   1
```

Notice that in the User column the user ID as well as the host ID are displayed. Also, the queue and queue device names are, this time, those of the remote host.

You can monitor the status of an specific queue and at the same time you can update this status acording to an specific period of time.

For example, if you want to monitor the status of the remote queue (rasc) every 2 seconds, enter the following command:

```
enq -P rasc -q -w2
```

Using this command, you can know when the print job is processed, first, by the local queue and then by the remote queue.

6.1.3.7 Cancelling a Job Sent to a Remote Queue

You can cancel a job, which was sent to a remote queue from the system you request to print the file, only when the print file remains queued in the local queue. This means, that once the print file is in the remote queue, you are able to cancel it only by accessing the remote system via `telnet` or `rlogin` and using the `smit qcan`, `cancel` or `rembak` commands from there. You can also use the `rexec` facility to execute the `qcan` command on the remote system. The ways to cancel a job sent to a remote queue are:

- Cancelling the job at the remote (server) host as a user logged onto that system using the `smit qcan` or `cancel` command
- Using the `rembak` command to cancel the job from the local (client) host.

Cancelling a Remote Print Job Using qcan: After obtaining the job number of a file that is queued on a remote host, the `smit qcan` command may be used to delete it (at the remote site). For doing this follow these steps:

1. Enter the following command as follows:

```
# smit qcan
```

2. From the following panel press F4 to choose a queue from the list:

```
                              Cancel a Print Job

Type or select values in entry fields.
Press Enter AFTER making all desired changes.

                                                      [Entry Fields]
  PRINT QUEUE containing job                         []                          +
     (required for remote jobs)
* Print JOB NUMBER                                   []                          +#


F1=Help             F2=Refresh          F3=Cancel           F4=List
F5=Reset            F6=Command          F7=Edit             F8=Image
F9=Shell            F10=Exit            Enter=Do
```

3. Select the queue called `rasc` from the following panel:

```
                        PRINT QUEUE containing job

   Move cursor to desired item and press Enter. Use arrow keys to scroll.

     # PRINT QUEUE[:PRINTER]      DESCRIPTION
       4019ascii                  ibm4019 (ASCII)
       4019gl                     ibm4019 (GL Emulation)
       4019pcl                    ibm4019 (PCL Emulation)
       4019ps                     ibm4019 (PostScript)
       psth                       Gandalfs
       ascth                      ascdup on gandalf, asc on thiessens
       rasc                       ascii queue at gandalf
       2380ascii                  IBM 2380 Plus printer (Model 2)
       4019ps:lp0                 ibm4019 (PostScript)
       4019ps:lp1                 ibm4039 (PostScript)

   F1=Help                F2=Refresh              F3=Cancel
   F8=Image               F10=Exit                Enter=Do
   /=Find                 n=Find Next
```

4. Enter the number of the job to cancel as shown in the following panel:

```
                              Cancel a Print Job

Type or select values in entry fields.
Press Enter AFTER making all desired changes.

                                                      [Entry Fields]
  PRINT QUEUE containing job                          [rasc]                    +
     (required for remote jobs)
* Print JOB NUMBER                                    [1]              +#



F1=Help             F2=Refresh          F3=Cancel           F4=List
F5=Reset            F6=Command          F7=Edit             F8=Image
F9=Shell            F10=Exit            Enter=Do
```

5. To verify that the job has been canceled you can use the `lpstat` command.

Cancelling a job using the cancel command: As mentioned before, you can cancel a job from the local system only when the print files are being proccesed by the local queue. When the print file is being proccesed by the remote queue you have to use the `cancel` command at the remote system.

To cancel a job either from the local system or the remote system follow these steps:

1. Check the the number of the queue you want to cancel by entering the following command:

```
# lpstat
```

2. From the following panel, you can choose the print file you want to cancel:

```
Queue   Dev   Status    Job Files              User         PP %   Blks  Cp Rnk
------- ----- --------- --- ------------------ ---------- ---- -- ----- --- ---
4019asc lp0   READY
4019gl  lp0   READY
4019pcl lp0   READY
4019ps  lp0   READY
4019ps  lp1   READY
psth    @gand READY
psth    psdup READY
psdup   ps403 READY
ascth   @gand READY
ascth   ascdu READY
ascdup  asc   READY
rasc    @gand READY
rasc    asc   READY     131   /etc/files.txt   root@gandalf     1  1    1    1   1
2380asc tty0  READY
#
```

3. To cancel job 131 enter the following command:

```
# cancel 131
```

   In the above example, 131 is the number of the job shown when you enter `enq -A, lpstat` or `qchk`

Cancelling a Remote Print Job Using rembak: The `rembak` command can be used to cancel remote print jobs. To cancel a remote print job you first would like to check the job you want to print. For doing so, you use the `lpstat` command as follows:

```
# lpstat
Queue   Dev   Status    Job Files              User         PP %   Blks  Cp Rnk
------- ----- --------- --- ------------------ ---------- ---- -- ----- --- ---
4019asc lp0   READY
4019gl  lp0   READY
4019pcl lp0   READY
4019ps  lp0   READY
4019ps  lp1   READY
psth    @gand READY
psth    psdup READY
psdup   ps403 READY
ascth   @gand READY
ascth   ascdu READY
ascdup  asc   READY
rasc    @gand READY
rasc    asc   DOWN
              QUEUED    140 /etc/qconfig       root@norm              3   1   1
2380asc tty0  READY
```

To cancel job 140 using the `rembak` command, enter the following:

```
# /usr/lpd/rembak -S gandalf -P asc -x -# 140 -u root@norm
```

This command will cancel the job on the remote print queue. In the preceding example the command used was structured as follows:

- The `-S` flag indicates the server on which the print job is queued. While the `lpstat` command did not tell you the name of this host you know that it is gandalf.
- The `-P` flag indicates the queue on the remote host where the job has been placed. The `qchk` command shows you that the remote queue name is `asc`.
- The `-x` flag indicates that a job cancel request is being sent.
- The `-#` flag indicates the job number that I wish to cancel. The `qchk` command shows you the job number. It is the same, 140, on both the local and remote systems.
- The `-u` flag indicates the user who owns the job. The `lpstat, enq -A` or `qchk` commands show only the first 10 characters of the user@system string. The user ID and host ID are root@gandalf.

6.2 IBM 4033 LAN Connection

Local Area Network printing has changed in the last few years. Now instead of having the shared printers attached directly to a file server, a dedicated PC print server or a worstation, you can attach the printers anywhere in the network by using the IBM 4033 LAN Connection. In addition, this devices allows you to attach simultaneously one parallel and one serial printer.

This section includes the following topics.

- IBM 4033 Description
- Installing a 4033-Attached Printer
- Running the 4033 AIX Utility

6.2.1 IBM 4033 Description

Before the explanation of the 4033 printer attachment, we must to make clear that the 4033 is not supported by AIX version 4.1. However we think is important to cover this topic due to the importance of this type of adapter. AIX version 3.2.5 fully supports the IBM 4033 LAN Connection.

The IBM LAN Connection for Printers and Plotters is a product which allows you to attach parallel or EIA-232-C serial printers or plotters directly to the network. The 4033 consists of an network printer adapter and a software utility which resides on a LAN print server. Both the serial and the parallel ports can be used simultaneously to support two printers or plotters.

The network printer adapter works in conjuction with software running on the print server which redirects print data normally destined for a print server's parallel ports. The server based software uses IEEE 802.2 data link control flows to send data to either the serial or parallel port of the network printer adapter. The redirector software portion of the 4033 must reside on the IBM AIX Version 4.1 for the RISC System/6000.

You can submit a print job through this device to a queue on the print server as if the printer was directly attached to the server. The 4033 intercepts the output before it reaches the server's LPT port, and redirects it to the network printer adapter.

You can submit a print job remotely via TCP/IP, using the remote print services (lpd) you can use the printers attached to the 4033 by addressing the print job to a remote queue located on the print server which has the printers locally attached through the IBM 4033 LAN Connection.

The IBM 4033 can be configured to a RISC System/6000 across a bridge. The adapter will not communicate over gateways such as TCP/IP gateways and routers.

You have to define each printer attached to the 4033 as a virtual printer on RISC System/6000 designated as the print server.

The IBM 4033 LAN Connection operates without noticeable degradation of prinitng performance and support the following data streams:

- IBM Personal Printer Data Stream (PPDS)
- Hewllet-Packard Printer Control Language (HP PCL)
- IBM/HP Graphics Library (GL)
- Adobe PostScript Level 1

6.2.1.1 Connectivity and Supported Models for AIX V.3.2.5

IBM 4033 Models 1,2, and 3 are supported by AIX V.3.2.5 In addition, IBM 4033 models 11,12, and 13 are supported by NetWare for AIX/6000 from IBM V. 3.11.

- IBM 4033 Models 1 and 11 support Token-Ring (IEEE 802.5) at 4 or 16 Mbps
- IBM 4033 Models 2 and 12 support Ethernet 10baseT (IEEE 802.3) at 10 Mbps
- IBM 4033 Models 3 and 13 support Ethernet 10base2 and 10base5, (IEEE 802.3) at 10 Mbps. These models also support Ethernet Type II (AIX)

6.2.2 Installing a 4033-Attached Printer

The IBM 4033 works in different kinds of environments. You can have users from different paltforms printing on a 4033-attached printer since the IBM 4033 has two ports, one for the parallel attachment and one for the serial attachment.

The following example was developed with the following hardware and software:

- RISC System/6000 attached to a 16 Mbps token-ring network
- AIX/6000 Operating System Version 3.2.5
- IBM 4039 LaserPrinter attached to the parallel port on the 4033
- IBM 4039 LaserPrinter attached to the serial port on the 4033

6.2.3 Installing the 4033 AIX Utility

To install the IBM 4033 Utility, follow these steps:

1. Log in as the root user
2. Insert AIX Utility Diskette disk into the diskette drive
3. Restore the diskette using the following command:

```
# restore -xv
```

6.2.4 Running the 4033 AIX Utility

As a result of the `restore -xv` command several files were copied in the /usr/lpp/lap directory. To configure 4033-attached printers, you can use either the `/usr/lpp/lap/mklanprt` command or SMIT.

This section describes the tasks you have to perform to configure a parallel printer using the SMIT and a serial printer using the `mklanprt` command.

6.2.4.1 Configuring a Parallel 4033 LAN Printer using SMIT

To configure a parallel printer using SMIT follow these steps:

1. Enter the following command:

```
# smit mkvirprt
```

2. Select `Printer or Plotter Attached to IBM 4033 LAN Connection` from the following panel:

```
     No.    Description
     1      Printer or Plotter Attached to Host
     2      Printer or Plotter Attached to Xstation
     3      Printer or Plotter Attached to ASCII Terminal
     4      Network Printer (Hewlett-Packard JetDirect)
     5      Printer or Plotter Attached to IBM 4033 LAN Connection

Enter number from list above (press Enter to terminate):  ->  5
```

3. Enter number 4 in order to leave the default value in the following panel:

```
Printer or Plotter Attached to IBM 4033 LAN Connection


Wait period for printer adapter response in seconds (4):    ->   4
```

4. Select the type of network that you are using. In this example we have only a token-ring network, so we select number 1:

```
     No.    What is the network type?
     1      tok0
     2      ent0

Enter number from list above (press Enter to terminate):  -> 1
```

```
     No.    What is the the address of the printer adapter?
     1      10005ABF358A

Enter number from list above (press Enter to terminate):  -> 1
```

5. Enter the type of attachment that you are using. In this case enter 1:

```
     No.    Is the printer attached serial or parallel
     1      Parallel
     2      Serial

Enter number from list above (press Enter to terminate):  ->  1
```

6. In the following screen select `Enhanced` mode to provide faster throughtput:

```
     No.    What is the parallel configuration?
     1      Enhanced  (recommended)
     2      Fastbytes
     3      Standard

Enter number from list above (press Enter to terminate):  -> 1
```

7. Enter the time out value for printer inactivity. The printer inactivity time is the period of time in which the network printer adapter waits for a busy printer before reporting the condition back to the user. For PostScript mode it is recommended to use a longer time out value.

```
Enter the printer time out value in seconds (60):    ->   60


Press Enter to configure the printer adapter (wait for responses):   ->
```

8. Press Enter
9. The following messages are shown. Enter the device name:

```
Port was released.
Port was associated.
Network printer adapter parameters set.
Press Enter to continue (¬C to terminate):   ->
Device name ( 1 - 20 characters ):   -> q4033
```

10. Select a printer from the list of AIX-supported printers:

```
     No.    Description
     3      IBM 2390 Personal Printer II                          [ 2 more ]
     4      IBM 2391 Personal Printer II
     5      IBM 3812 Model 2 Page Printer
     6      IBM 3816 Page Printer
     7      IBM 4019 LaserPrinter
     8      IBM 4029 LaserPrinter
     9      IBM 4039 LaserPrinter
     10     IBM 4070 IJ Printer

Enter number from list above (press Enter to terminate):  ->  7
```

11. Enter the required values and the names of the queues you want to configure for the printer as shown below:

```
            IBM 4019 LaserPrinter
Header pages wanted?  (n=none; a=each file; g=each job):  -> (n)   n
Trailer pages wanted? (n=none; a=each file; g=each job):  -> (n)   n
NOTE:   The 4019 printer supports multiple print data streams.
        Each of the data streams will now be configured individually.
--------------------  PostScript  --------------------
Enter print queue name (or, ! to bypass configuration):   -> (ps)   ps4033
Should this queue be the default queue? -> (y)  n
4019 (PostScript) configured for print queue ps4033
--------------------  HP LaserJet II Emulation  --------------------
Enter print queue name (or, ! to bypass configuration):   -> (pcl)   pcl4033
Should this queue be the default queue? -> (y)  y
4019 (HP LaserJet II Emulation) configured for print queue pcl4033
--------------------  Plotter Emulation  --------------------
Enter print queue name (or, ! to bypass configuration):   -> (gl)   gl4033
4019 (Plotter Emulation) configured for print queue gl4033
--------------------  IBM ASCII  --------------------
Enter print queue name (or, ! to bypass configuration):   -> (asc)   asc4033
4019 (IBM ASCII) configured for print queue asc4033

Press Enter to continue.
```

12. Now the queues are ready. To check your 4033 queues enter the `lpstat` command as follows:

```
# lpstat

Queue   Dev   Status    Job Files              User         PP %   Blks  Cp Rnk
------- ----- --------- --- ------------------ ---------- ---- -- ----- --- ---
pcl4033 q4033 READY
ps      lp1   READY
bsh     bshde READY
qu3825  dev1  READY
qu3825  dev2  READY
qu3825  dev3  READY
qu3825  dev4  READY
ps3825  dev1  READY
ps3825  dev2  READY
ps3825  dev3  READY
ps3825  dev4  READY
630     lp1   READY
ps4033  q4033 READY
gl4033  q4033 READY
asc4033 q4033 READY
```

13. To print a file enter the following command:

```
# enq -Pasc4033 /etc/qconfig
```

6.2.4.2 Configuring a Serial 4033 LAN Printer Using the mklanprt Command

To install a serial printer using the `mklanprt` command, follow these steps:

Note: You can also use SMIT to configure this printer.

1. Enter the following command:

```
# mklanprt
```

2. Select the type of network you are using. In this case we are using a token-ring network
3. Enter the adapter address
4. Select the type of interface you are using

```
What is the network address of the adapter?
Type the 12-character address
or press Enter for a list of adapters:10005ABE93A5

Is the printer attached serial or parallel? (1)
 1. Parallel
 2. Serial
Select:2
```

5. In the following screens you will find serial interface parameters for the network printer adapter. Make sure that these selections match the settings on the printer.

   Select a data rate as follows:

```
What is the data rate? (7)
 1.  150
 2.  300
 3.  600
 4.  1200
 5.  2400
 6.  4800
 7.  9600
 8.  19200
 9.  38400
Select:7
```

6. Select the parity as follows:

```
What is the parity selection? (1)
 1.  None
 2.  Odd
 3.  Even
 4.  Space
 5.  Mark
Select:1
```

7. Select the data bits as follows:

```
How many data bits per character? (2)
 1.  7 Data bits
 2.  8 Data bits
Select:2
```

8. Select the stop bits as follows:

```
How many stop bits per character? (1)
 1.  1   Stop bit
 2.  1.5 Stop bits
 3.  2   Stop bits
Select:1
```

9. Select the pacing control as follows:

```
What is the printer pacing protocol? (1)
 1. DTR
 2. Xon
Select:1
```

10. Select a printer from the list of AIX-supported printers as follows:

```
7.      [devices.cat,71,120;Canon LASER SHOT LBP-B406G]
8.      [devices.cat,71,121;Canon LASER SHOT LBP-A404PS/Lite]
9.      [devices.cat,71,1;IBM 4201 Model 3 Proprinter III]
10.     [devices.cat,71,66;IBM 4039 LaserPrinter]
11.     [devices.cat,71,6;IBM 4019 LaserPrinter]
12.     [devices.cat,71,75;Hewlett-Packard LaserJet III]
13.     [devices.cat,71,97;IBM 4079 Color Jetprinter PS]
14.     [devices.cat,71,98;Canon Laser Shot LBP-B406/S/D/E.]
15.     [devices.cat,72,106;Hewlett-Packard LaserJet 4]
16.     [devices.cat,72,4;IBM 3816 Page Printer]
17.     [devices.cat,72,59;IBM 7372 Color Plotter]
18.     [pioattr1.cat,1,734;ASCII Printer]
19.     [pioattr1.cat,1,735;Plotter]
20.     [pioattr1.cat,1,736;PostScript Printer]
(more 2)

Select the item number for your printer
or press Enter to view additional printers:10
```

11. Make the selection of the next screen acording to your needs
12. Enter the name of the queue to which the printer is associated
13. Enter the time out value for printer inactivity. The printer inactivity time is the period of time in which the network printer adapter waits for a busy printer before reporting the condition back to the user. For PostScript mode it is recommended to use a longer time out value

```
Header pages wanted? (1)
 1. No
 2. Each file
 3. Each job
Select:1

Trailer pages wanted? (1)
 1. No
 2. Each file
 3. Each job
Select:1

What name to use for the printer?
Enter 1-7 characters:q4033s


Enter the printer time out value in seconds (60):60


A queue for each data stream supported by the printer will now
be configured.
Please wait....
```

14. Enter the required values and the names of the queues you want to configure for the printer as shown below:

```
A queue for each data stream supported by the printer will now
be configured.

    -------  PPDS (IBM ASCII) Mode  -------
Enter print queue name (or "!" to bypass): (asc)sa4033

    -----  Plotter Emulation Mode  -----
Enter print queue name (or "!" to bypass): (gl)sgl4033

    -----  HP Emulation Mode  -----
Enter print queue name (or "!" to bypass): (pcl)pcs4033

    ------  PostScript Mode  ------
Enter print queue name (or "!" to bypass): (ps)pss4033
Please wait....
```

15. Now the queues are ready. To check your 4033 queues enter the `lpstat` command as follows:

```
# lpstat

Queue   Dev   Status    Job Files              User         PP %   Blks  Cp Rnk
------- ----- --------- --- ------------------ ---------- ---- -- ----- --- ---
pcl4033 q4033 READY
ps      lp1   READY
bsh     bshde READY
qu3825  dev1  READY
sa4033  s4033 READY
sgl4033 s4033 READY
pcs4033 s4033 READY
pss4033 s4033 READY
pss4033 s2403 READY
```

16. To print a file enter the following command:

```
# enq -Pasc4033 /etc/qconfig
```

6.3 IBM LaserPrinter Integrated Network Option

The Integrated Network Option is the Lexmark MarkNet Integrated Network Adapter (INA) which is used in every IBM 4039 Printer. With a MarkNet or MarkNet XL INA, any 4039 printer will support the most common protocols (including multiple protocols concurrently), and varios types of cabling. The INA, as does the 4033, allows you to free up dedicated PC print servers for use as LAN workstations.

For enterprises with multiple protocols working concurrently, the INA determines the incoming protocol with the SmartSwitch, which automatically switches to the appropiate datastream interpreter. This means that the MarkNet cards allows the 4039 printer to receive and print jobs from multiple operating system environments simultaneously. The printer automatically use the appropiate protocols DLC/LLC, IPX, AppleTalk** or TCP/IP for each print job received.

There are seven different types of INA options for attaching to: Token-Ring, Ethernet 10BaseT, 10Base2 and LocalTalk** wiring topologies. The MarkNet XL INAs support all the same protocols as MarkNet INAs, with the addition of concurrent support for TCP/IP.

The MarkNet XL network adpaters support the TCP/IP protocols used by these network operating systems:

- SunOS **
- Sun Solaris**
- IBM AIX/6000
- Sun Solaris x86
- HP-UX**
- SCO**
- NCR System V**

6.3.1 Internal Network Adapters for AIX V.4.1

Most of the AIX environments use TCP/IP protocols for communications between all the hosts that integrates the network. The INA adapter is treated as another host. This means that the adapter has its own IP address so you can ping the card as any other host. For this reason we recommend for you to use the MarkNet XL INA options because of the TCP/IP support that adapters have.

These are the INA adapters that you use with TCP/IP networks using AIX/6000 V.4.1:

- MarkNet XL Internal Network Adapter for Token-Ring: Part Number 1325496
- MarkNet XL Internal Network Adapter for Ethernet 10Base2: Part Number 1325495
- MarkNet XL Internal Network Adapter for Ethernet 10Base2: Part Number 1325497

The TCP/IP protocol suite includes a set of standard application services which the MarkNet XL family pf options utilize to accomplish support for printing services on a TCP/IP network. These include the the following:

- File Transfer Protocol (FTP)

- Trivial File Transfer Protocol (TFTP)
- Simple Network Managament Protocols (SNMP)
- Line Printer Daemon/Line Printer Remote (LPD/LPR)
- Finger, Ping, BootP

6.3.2 How the Internal Network Adapter Work

The Internal Network Adapter works in a similar way as the IBM 4033. The main difference is that you connect the parallel or serial port on the printer to an IBM 4033, but you install the Network Option inside the printer. You must configure the 4033 for the port to which you connected it, but this step doesn't apply to the Network Option. Because the Network Option works inside the printer, the parallel and serial ports on your printer are free to to be connected to other computers.

Another major difference netween the IBM 4033 and the Network Option is that the INA accepts print jobs from several servers simultaneoulsy, where the IBM 4033 cannot.

The INA works with a protocol called the LexLink** protocol, which is a propietary printer protocol developed by Lexmark International, Inc., based on IEEE 802.2. The LexLink protocol is used by the IBM 4033 and the IBM LaserPrinter Internal Network Adapter.

6.3.3 Installing the INA-Attached Printer

The first step you have to perform is to add a host name and an IP address for the network printer as follows:

```
# vi /etc/hosts

# Internet Address      Hostname        # Comments
# 192.9.200.1           net0sample      # ethernet name/address
# 128.100.0.1           token0sample    # token ring name/address
# 10.2.0.2              x25sample       # x.25 name/address
127.0.0.1               loopback localhost      # loopback (lo0) name/address
129.35.22.163           thiessen
9.3.1.28                bob4
9.3.1.74                gandalf.itsc.austin.ibm.com     gandalf
9.3.1.99                ina4039
```

Now you have to install the AIX TCP/IP Network Printer Utility as follows:

1. Insert the utility diskette in the drive
2. Enter the following command to restore the utility files:

```
# restore -x -f /dev/fd0
Please mount volume 1 on /dev/rfd0
press Enter to continue
```

Note: The files are installed on /usr/lpp/lemark

To configure the printer you can use either the `mklexprt` command or SMIT.

To configure the printer using SMIT, follow these steps:

1. Enter the following fastpath:

```
# smit mkpq
```

2. In the following screen select the `lex (Printer Attached via TCP/IP to IBM Integrated Network)` Option:

```
                        Add a Print Queue                               x

   Move cursor to desired item and press Enter. Use arrow keys to scroll.

     # ATTACHMENT TYPE      DESCRIPTION
       local                Printer Attached to Local Host
       remote               Printer Attached to Remote Host
       xstation             Printer Attached to Xstation
       ascii                Printer Attached to ASCII Terminal
       hpJetDirect          Network Printer (HP JetDirect)
       file                 File (in /dev directory)
       ena                  Printer or Plotter Attached to IBM 4033 LAN Con
       lex                  Printer Attached via TCP/IP to IBM Integrated N
       other                User Defined Backend

   F1=Help                 F2=Refresh              F3=Cancel
   F8=Image                F10=Exit                Enter=Do
   /=Find                  n=Find Next
```

3. Press Enter to configure a TCP/IP printer
4. Enter the hostname of the printer as follows:

```
/usr/lpp/lexmark/mklexprt:
        mklexprt.sh     2.103 3/9/94 - script to install a TCP/IP printer


Enter a TCP/IP hostname for the printer: ina4039
```

Note: The hostname for the printer must be the same as the one defined in the /etc/hosts file or on the name server. After you enter the printer name, the utility verifies that the printer is attached to the network.

5. Select a printer type from the list:

```
                          Printer Type

    Move cursor to desired item and press Enter.

    [TOP]
      ibm2380      IBM 2380 Personal Printer II
      ibm2380-2    IBM 2380 Plus printer (Model 2)
      ibm2381      IBM 2381 Personal Printer II
      ibm2381-2    IBM 2381 Plus printer (Model 2)
      ibm2390      IBM 2390 Personal Printer II
      ibm2390-2    IBM 2390 Plus printer (Model 2)
      ibm2391      IBM 2391 Personal Printer II
      ibm2391-2    IBM 2391 Plus printer (Model 2)
      ibm3812-2    IBM 3812 Model 2 Page Printer
      ibm3816      IBM 3816 Page Printer
      ibm4019      IBM 4019 LaserPrinter
      ibm4029      IBM 4029 LaserPrinter
      ibm4037      IBM 4037 LP printer
      ibm4039      IBM 4039 LaserPrinter
```

6. In this step you will probably find some differences, however you have to select if you want header and trailer pages or not, also you have to define a queue for each data stream as follows:

```
Header pages wanted? (1)
 1. No
 2. Each file
 3. Each job
Select:1

Trailer pages wanted? (1)
 1. No
 2. Each file
 3. Each job
Select:1

A queue for each data stream supported by the printer will now
be configured.

    -------  PPDS (IBM ASCII) Mode  -------
Enter print queue name (or "!" to bypass): (asc) ascina

    ------  PostScript Mode  ------
Enter print queue name (or "!" to bypass): (ps)  psina
```

7. Now the queues are ready. To check your INA queues enter the `lpstat` command.
8. After finishing this procedure the following message will appear:

```
The network printer adapter has been configured
```

9. You can test the network printer by issuing the following command:

```
# enq -Pascina /etc/hosts
```

Note: To set the IP address, Netmask, and Gateway, refer to TCP/IP Information for the IBM LaserPrinter 4039 manual.

6.4 Hewllet Packard JetDirect Card

There are two kinds of JetDirect** Attachments:

- External JetDirect (card/box located outside of the printer)

  In this case the card IP address has to be defined via a BOOTP/TFTP server.

- JetDirect Card installed in a printer

  This allows you to define an IP address through a menu on the printer.

6.4.1 External JetDirect Card

This section describes the steps you have to follow to configure a printer attached to the network with an External Hewlett-Packard JetDirect card and how to add a print queue.

Prior to the configuration, you have to read the documentation for your printer in order to obtain printer-specific information to connect and configure the printer. In addition, we recommend that you read the documentation for the Hewlett-Packard JetDirect card.

In order to configure the printer, you must have root authority.

To configure the printer, follow these steps:

1. Enter the following command:

```
smit mkpq
```

2. Select the `hpJetDirect` as follows:

```
                        Add a Print Queue

Move cursor to desired item and press Enter. Use arrow keys to scroll.

  # ATTACHMENT TYPE      DESCRIPTION
    local                Printer Attached to Local Host
    remote               Printer Attached to Remote Host
    xstation             Printer Attached to Xstation
    ascii                Printer Attached to ASCII Terminal
    hpJetDirect          Network Printer (HP JetDirect)
    file                 File (in /dev directory)
    ena                  Printer or Plotter Attached to IBM 4033 LAN Con
    lex                  Printer Attached via TCP/IP to IBM Integrated N
    other                User Defined Backend

F1=Help                 F2=Refresh              F3=Cancel
F8=Image                F10=Exit                Enter=Do
/=Find                  n=Find Next
```

3. Select the printer manufacturer, then the printer type.

```
                          Printer Type

Move cursor to desired item and press Enter.

  Bull
  Canon
  Dataproducts
  Hewlett-Packard
  IBM
  OKI
  Printronix
  QMS
  Texas Instruments
  Other (Select this if your printer type is not listed above)

F1=Help                 F2=Refresh              F3=Cancel
F8=Image                F10=Exit                Enter=Do
/=Find                  n=Find Next
```

Note: Remember that you must have installed the correct driver for the printer you want to configure.

4. Select the printer IBM 4019 as follows:

```
                          Printer Type

Move cursor to desired item and press Enter.

[MORE...9]
  ibm3816      IBM 3816 Page Printer
  ibm4019      IBM 4019 LaserPrinter
  ibm4029      IBM 4029 LaserPrinter
  ibm4037      IBM 4037 LP printer
  ibm4039      IBM 4039 LaserPrinter
  ibm4070      IBM 4070 IJ printer
  ibm4072      IBM 4072 ExecJet
  ibm4076      IBM 4076 IJ printer
  ibm4079      IBM 4079 Color Jetprinter PS
  ibm4201-2    IBM 4201 Model 2 Proprinter II
  ibm4201-3    IBM 4201 Model 3 Proprinter III
[MORE...34]

F1=Help                 F2=Refresh              F3=Cancel
F8=Image                F10=Exit                Enter=Do
/=Find                  n=Find Next
```

5. Select one of the following options:

```
                        BOOTP/TFTP Server

Move cursor to desired item and press Enter.

  1 Make this system a BOOTP/TFTP server
  2 Do NOT make this system a BOOTP/TFTP server

F1=Help                 F2=Refresh              F3=Cancel
F8=Image                F10=Exit                Enter=Do
/=Find                  n=Find Next
```

Make this system a BOOTP/TFTP server places an entry in the /etc/bootptab file that defines the printer for the network. In this case the hostname and IP address are established from the rentries in /etc/hosts file.

Do NOT make this system a BOOTP/TFTP server if this was done previously when a print queue was created for this printer, if another system has been

configured as the BOOTP/TFTP server for the card, or if the card has been set to use network configuration data entered from the printer's front panel.

6. Fill the required fields as follows, if you made this system a BOOTP/TFTP server, otherwise, don't fill the following fields:
   - HARDWARE ADDRESS of the JetDirect Card
   - GATEWAY ADDRESS
   - SUBNET MASK

```
                              Add a Print Queue

Type or select values in entry fields.
Press Enter AFTER making all desired changes.

                                                        [Entry Fields]
  Description                                          IBM 4019 LaserPrinter

  Names of NEW print queues to add
     ASCII                                            [ascjetd]
     GL Emulation                                     [gljetd]
     PCL Emulation                                    [pcljetd]
     PostScript                                       [psjetd]

  Printer connection characteristics
*    HOSTNAME of the JetDirect Card                   [jetdirect]
*    HARDWARE ADDRESS of the JetDirect Card           [12DE34ADEFFF]
     GATEWAY ADDRESS                                  [9.3.1.74]
     SUBNET MASK                                      [255.255.255.0]



F1=Help             F2=Refresh          F3=Cancel           F4=List
F5=Reset            F6=Command          F7=Edit             F8=Image
F9=Shell            F10=Exit            Enter=Do
```

7. Press Enter

   After this is complete, you can edit the /etc/bootptab file to look for the JetDirect name entry that looks the following:

```
# vi /etc/bootptab

#      dt   -- old style boot switch
#      T170 -- (xstation only) -- server port number
#      T175 -- (xstation only) -- primary / secondary boot host indicator
#      T176 -- (xstation only) -- enable tablet
#      T177 -- (xstation only) -- xstation 130 hard file usage
#      T178 -- (xstation only) -- enable XDMCP
#      T179 -- (xstation only) -- XDMCP host
#      T180 -- (xstation only) -- enable virtual screen
x_st_mgr.tr120:ht=tr:hd=/etc/x_st_mgr:bf=tr120:T170=2328:ds=9.3.1.74:gw=9.3.1.74
:sm=255.255.255.0:bt:
P4028:ht=6:ha=23402030DDFF:ip=9.3.1.31:sm=255.255.255.0
tx24.itsc.austin.ibm.com:tc=x_st_mgr.tr120:ha=10005ac3d4d6:ip:
jetdirect:ht=6:ha=12DE34ADEFFF:ip=9.3.1.32:
sm=255.255.255.0:gw=9.3.1.74
```

   If you can't print the job and you have a RUNNING status, the JetDirect card is probably not booted and never received the tftp packets. This could happend if you have faulty cables on unterminated Ethernet lines.

   To check if there is a problem with the network, you can ping other hosts. You can also print an entire page by pressing the test button (it normally takes about 45 seconds to start printing). If you are using an integrated card, select a test page from the printer menu.

If IP address and subnet mask are blank, then the card has not been configured. The bootp should be in progress, which means that the card is sending out boot packets but is not getting packets back from the the RISC System/6000. If the hardware address was entered incorrectly, the JetDirect card will not receive replies from the RS/6000 because it is not acknowledging the packets from the card. To correct this problem you have to make sure that the entry in the /etc/booptab file matches with one printed out on the test page. If the address doesn't match you have to repeat the procedure.

Note: The bootptab entry must be removed manually.

6.4.2 Integrated JetDirect Card

In the case that the card is inside the printer, the address can be set from the front panel of the the printer. Then you have to add the name and address to /etc/hosts or nameserver.

The steps you have to follow are the same as the ones mentioned in 6.4.1, “External JetDirect Card” on page 143. The only difference is that in this case you have to choose to NOT make this system a BOOTP/TFTP server and you don't have to fill the following fields:

- HARDWARE ADDRESS of the JetDirect Card
- GATEWAY ADDRESS
- SUBNET MASK

Note: You should be able to ping the card like any other hosts .

6.5 IBM 7318 Serial Communication Network Server

This feature provide RISC System/6000 systems with a LAN-attached, serial asynchronous connectivity.

The IBM 7318 Serial Communication Network Server Model P10 and Model S20 allows you to attach async devices such as terminals, modems and printers. to an Ethernet LAN attached to the RISC System/6000 or other systems.

The model P10 provides serial and parallel ports for one or more RISC System/6000 systems using standard Ethernet LAN wiring and protocols. In addition, it provides the system with TTY devices that act like a Standard I/O Serial Port on the RISC System/6000 (sa0 and sa1). These ports are statically created and can be opened by any AIX process. Instead of using the TELNET or RLOGIN protocols, a higher performance protocol is used over the SPX/IPX transport protocol which talks to a host-resident device driver to provide the system TTY devices.

The model S20 provides all the functions of the P10 for async and parallel port attachment to the RISC System/6000. It also allows you to connect to other IBM systems and non-IBM systems using standard Ethernet wiring, TCP/IP protocols, and 3270 terminal emulation. In addition, the model S20 also provides network management with SNMP, kerberos security functions and other serial protocols like SLIP, CSLIP and PPP for interoperability with other systems.

This section describes the steps you have to follow to:

- Configure the 7318 Model P10
- Configure a parallel printer

Note: We are configuring the parallel printer with model P10. However, model S20 has the same features, which means that the configuration would be the same.

At this moment, the LPP for the 7318 is already installed.

6.5.1 Configuring the 7318 Model P10

The configuration we are using is shown in Figure 41. The 7318 model P10 is an Ethernet-attached device and so our system has a High Performance Ethernet Adapter and Ethernet interface.

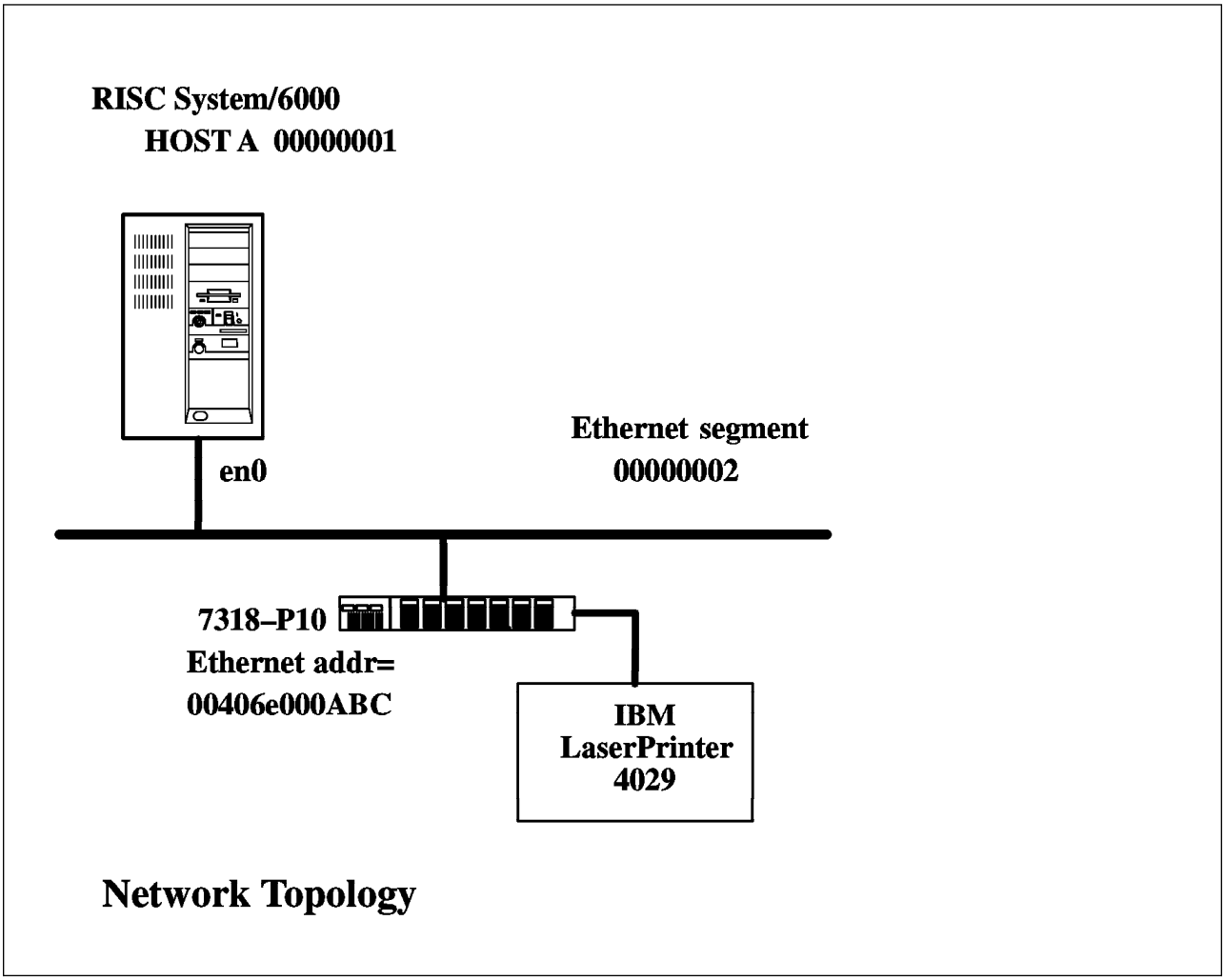

Figure 41. IBM 7318 Printing Scenario

We recommend for you to use the directions of the 7318 manual *IBM 7318 Serial Communications Server Guide and Reference (SA23-2542)* to make use of the configuration worksheet. This worksheet will be very helpful if somenthing should go wrong.

Verify the parameter settings below and change them, if necessary, in the /etc/netware/NPSConfig file. It's easiest to just search for the parameter itself to locate them in the file (example: `/spx =`).

6.5.1.1 Parameter: spx=active

This parameter enables the SPX/IPX protocol on this host. Change this value from inactive to active if necessary.

6.5.1.2 Parameter: internal_network = 00000001

This is a unique number for this host/network. Since there are no other hosts in this example, this value won't conflict with any other hosts, but must be different from the LAN network number (see below).

6.5.1.3 Parameter: lan_1_ppa = 0 and lan_1_if_name = "en"

Concatenate the values from lan_x_if_name and lan_x_ppa to obtain the ethernet interface being used for this segment. For this example these are `en` and `0`, yielding interface `en0`. Now you need to check to verify that this interface is really up and running. The `smit chinet` fastpath will allow you to check this quickly, selecting the interface name you constructed above. Look in the Current STATE field for a value of UP.

If the interface is not UP, then you need to start TCP/IP on this interface. Use the `smit tcpip` fastpath and select `minimal configuration and startup`. Assign the IP address, network mask, and cable type and start the interface.

6.5.1.4 Parameter: lan_1_network = 00000002

This is a unique number for this host/network. Although this value defaults to 00000002, if you already have IPX running on the Ethernet you will need to make sure that this value doesn't conflict with the internal_network number of any other host on your IPX network or the external network number of any of the Ethernet segments in this network.

If you made any changes to this file, you will need to reboot the system later on, but continue with the following steps for now.

Record the relevant data from the 7318 on your 7318 configuration worksheet. You will need to know the Ethernet address to complete the configuration process.

To add the adapter, follow these steps:

1. Enter the following command:

```
# smit ts7318_mnu
```

2. Fill the SMIT panel acording to the following directions.
3. Fill in the New ComNetServer Number with next next available value.
4. Fill in the ComNetServer Network Address with the value you set for lan_1_network in the NPSConfig file above. This should be for the Ethernet segment on which the 7318 is attached.
5. Fill in the ComNetServer Ethernet Address field (12 hexadecimal digits).

   Note: The 7318 ethernet address is on a label on the back of the 7318 unit. The first 6 digits for this field are already supplied by smit.
6. The SMIT panel has to have values as the ones shown as follows:

```
                                Add a ComNetServer

Type or select values in entry fields.
Press Enter AFTER making all desired changes.

                                                      [Entry Fields]
  New ComNetServer Number                            [01]                    +#
  Autogenerated TTY Devices                           TTYs Only              +
  Interface Type                                      RS-232                 +
  ComNetServer Network Address                       [00000002]
  ComNetServer Ethernet Address                      [00406e0002e8]
  ComNetServer Bootfile                              [/usr/lib/cns/cns1600]



F1=Help             F2=Refresh          F3=Cancel           F4=List
F5=Reset            F6=Command          F7=Edit             F8=Image
F9=Shell            F10=Exit            Enter=Do
```

7. Press Enter

This will configure the 7318 on this system and also configure one RS-232 device session on each port of the 16 serial ports. If necessary, SPX/IPX will be started and the CNSVIEW daemon will be started or re-initialized with the new information. The CNSVIEW daemon monitors the network for the 7318 boot requests. CNSVIEW also provides a command line interface to performs administration functions for the 7318. The 7318 will be able to boot from the system when it is powered up. Allow two minutes for this to complete.

6.5.2 Configuring a Parallel Printer

We are configuring a parallel printer (IBM 4029 LaserPrinter) to a parallel port of the 7318 model P10. To complete this procedure follow these steps:

1. Enter the following command:

```
# smit ts7318_mnu
```

2. Select `ComNetServer Server Configuration`
3. Select `Add a printer to a ComNetServer`
4. Fill the required fields as follows:

```
                        Add a Printer to a ComNetServer

Type or select values in entry fields.
Press Enter AFTER making all desired changes.

                                                      [Entry Fields]
  Printer ComNetServer Number                        [02]
  Printer Type                                       [4029]
  Printer Description                                [IBM 4029 LaserPrinter]
  Printer Interface                                  [parallel]
  Printer Port Number                                [p1]




F1=Help             F2=Refresh          F3=Cancel           F4=List
F5=Reset            F6=Command          F7=Edit             F8=Image
F9=Shell            F10=Exit            Enter=Do
```

5. Press Enter
6. The result of this procedure is the following:

```
                                  COMMAND STATUS

Command: OK            stdout: yes           stderr: yes

Before command completion, additional instructions may appear below.

Defining Device: define -c printer -p cns02 -s rs232 -t 4029 -w p1
Defined Device: lp0


Re-Initializing cnsview daemon
Netware is already running
Daemon init complete


Configuring lp0
lp0 Available NW-00-02-p1 IBM 4029 LaserPrinter


Command "Add" completed successfully
Configuration Database updated


F1=Help             F2=Refresh          F3=Cancel           F6=Command
F8=Image            F9=Shell            F10=Exit
```

Note: The created device is /dev/lp0 and the location code indicates that it is attached via network on CNS02 on parallel port 1 (NW-00-02-p1).

Now we heve to add the device to a queue. For doing so, follow these steps:

1. Enter the following command:

```
# smit virprt
```

2. From the following screen select number 1:

```
     No.    Description
     1      Printer or Plotter Attached to Host
     2      Printer or Plotter Attached to Xstation
     3      Printer or Plotter Attached to ASCII Terminal
     4      Network Printer (Hewlett-Packard JetDirect)

Enter number from list above (press Enter to terminate):  ->  1
```

3. Enter the device name:

```
      Name         Description
      lp0          IBM 4029 LaserPrinter

Enter device name (or, ! to exit):  (lp0)  ->  lp0
```

4. Select the options for this virtual printer. In this case we are only defining the ASCII queue:

```
                  IBM 4029 LaserPrinter
Header pages wanted?  (n=none; a=each file; g=each job):  -> (n)
Trailer pages wanted? (n=none; a=each file; g=each job):  -> (n)
        Each of the data streams will now be configured individually.
--------------------  PostScript  --------------------
Enter print queue name (or, ! to bypass configuration):   -> (ps)   !
--------------------  HP LaserJet II Emulation  --------------------
Enter print queue name (or, ! to bypass configuration):   -> (pcl)   !
--------------------  Plotter Emulation  --------------------
Enter print queue name (or, ! to bypass configuration):   -> (gl)   !
--------------------  IBM ASCII  --------------------
Enter print queue name (or, ! to bypass configuration):   -> (asc) asc7318
Should this queue be the default queue? -> (y)  n
4029 (IBM ASCII) configured for print queue asc

Press Enter to continue.
```

5. Enter the `lpstat` command to check the printer status:

```
# lpstat

Queue   Dev   Status    Job Files              User         PP %   Blks  Cp Rnk
------- ----- --------- --- ------------------ ---------- ---- -- ----- --- ---
bsh     bshde READY
asc731  lp0   READY
```

6. Finally edit the /etc/qconfig file to check if the entries look like the ones shown below:

```
# vi /etc/qconfig

asc7318:
        device = lp0
lp0:
        file = /dev/lp0
        header = never
        trailer = never
        access = both
        backend = /usr/lib/lpd/piobe
```

Note: The printer device can be added to the spooling subsystem just as if it were the standard I/O parallel port.

6.6 IBM 3930-03D and 03S Printer

The IBM 3930-03D is a 300-pel, duplex, 30 impression per minute printer that accepts PCL5 input and has a feature that allows it to be connected directly to an Ethernet network.

To print to a 3930 printer using the Ethernet backpack, you must have microcode 1.09.02 or later installed in the printer. Then you perform the following tasks to define a printer queu for the 3930:

1. Enter `smit mkrque`
2. Specify a queue name in the NAME of queue to add field. (You can select any name, but must fill this option).
3. Specify the name associated with the 3930's IP address (found in the etc/hosts file) in the DESTINATION HOST for remote jobs field.
4. Specify a queue name in the NAME of queue on remote printer field (because SMIT requires this field even though the 3930 does not have a queue name, you must enter some value in this field).
5. Specify a device name in the NAME of device to add field.

To use this Ethernet 3930 with PSF/6000:

1. Enter, `smit psf_task_select`.
2. Select the `Add a Printer or PSF/6000 Queue`
3. Select the `AIX Defined (Parallel, Serial or LAN)` option
4. Select the `PCL5` option
5. Change the COMMAND to execute for printer output replacing the queue name, `pcl`, with the name of the queue you specified in the NAME of queue to add field.

   Note: To enable duplex printing, use the PSF/6000 BIN Mapping Options panel. Also you must ensure that your printer is correctly configured for duplex printing.

Chapter 7. Print Services Facility/6000

This chapter is intended to show you the most common tasks that you have to perform in order to manage a Print Services Facility/6000 (PSF/6000) server and its printers. The following topics are included:

- Description of PSF/6000
- Printer Installation and configuration for PSF/6000
- Printing with PSF/6000
- Printing Management
- Remote Printing from different platform client systems (PSF/6000 connectivity)
- PSF/6000 PSF Direct Component

Note: At this moment PSF/6000 runs under AIX version 3.2.5. However AIX version 4.1 clients are supported and able to use PSF/6000 printers. Support will be provided for PSF/6000 to run as a server under AIX Version 4.1 at a future date.

7.1 Description of PSF/6000

Today's AIX printing environment is limited to small or medium-range printers attached directly the RISC System/6000 via parallel or serial ports. The printing speed of those printers usually is no more that 30 pages a minute.
Print-management facilities are very limited, and printers do not have error recovery when something occurs while you are printing. In addition, graphical resources such as fonts, electronic forms (overlays), and graphics must be part of the application print file.

All of these limitations become very important when the companies want to migrate to UNIX environments and move away from mainframe solutions. AIX printing is not as robust as it is on the mainframes. Centralized printing as well as production printing is out of the question. AIX and UNIX data streams such as ASCII, PostScript and ditroff are not very familiar to people used to work with mainframes. Systems 370 or 390 work more with line data or AFP data streams.

PSF/6000 is the software intended to cover some of the deficiencies that AIX has.

PSF/6000 is another product that belongs to the AFP (Advanced Function Presentation) architecture. This architecture is the IBM presentation strategy for documents.

Pennant*, an IBM Company, is in charge of commercializing and supporting this architecture.

7.1.1 The Advanced Function Presentation

Advanced Function Presentation (AFP) combines software programs and nonimpact, all-points-addresable printers to allow users to improve enterprise productivity. AFP provides the following advantages:

- You can save time because you are able to print on high speed printers.
- You save paper by printing on both sides of the sheet and by printing multiple reduced pages on one sheet

© Copyright IBM Corp. 1991, 1994

- You save time and money by replacing preprinted forms with electronic forms.
- You have remote printing capabilities which allow different platforms to use different types of printers. This allows better communication and saves time within the company by distributing printed information through the network.
- You can enhance the quality of your regular documents by adding
  - Typographic fonts
  - Bar codes
  - Graphics and images
  - Electronic forms (overlays)

In summary, AFP is the combination of hardware and software that allows you to print to all-points-addressable printers with different speeds from a variety of operating systems. In addition, it enhances the quality of your text and graphics information. The data stream support that this architecture provides, enables you to print virtually anything, anywhere.

7.1.2 Supported Input and Output Data Streams

PSF/6000 is a print server that allows you to print AFP and Mixed Object: Document Content Architecture For Presentation (MO:DCA-P). This kind of data stream is not very familiar to people which have only worked in an AIX environment. However this capability is very powerful when you are printing from host environments in which you have existing AFP applications. In addition, PSF/6000 can generate AFP data stream from applications running in Operating System/2* (OS/2) and MS-DOS** Windows environments.

For AIX users, PSF/6000 supports transforms that accept PostScript level 2, HP-PCL, ditroff, DBCS ASCII, EUC, S/370 line data and uformatted ASCII as input data streams and produce MO:DCA output. Formatted ASCII used by the IBM Proprinter II and the IBM QuietWriter III are also supported as an input data stream. In order to convert these input data streams to output data streams, you have to use a print command, either from the command line or a SMIT panel telling the system the type of data stream you are using as input (for example Postscript). When you are using AFP data stream, PSF/6000 recognizes this type of input data stream automatically. Because PSF/6000 knows the type of data streams supported by the printer which will print the job, you don't have to change anything in the application or in the printer in order to print your job. The program itself creates the appropriate data stream supported by the printer.

The output data streams created by PSF/6000 are the following:

- Intelligent Print Data Stream (IPDS), used by Pennant Printers
- Personal Printer Data Stream (PPDS), used by IBM's LaserPrinters
- Hewlett-Packard Printer Control Language (PCL4, PCL5, or PCL5C) Data Stream, used by Pennant printer models IBM 3912 Page Printer, IBM 3916 Page Printer, IBM 3930-03D and 03S Page Printer, IBM LaserPrinters, Hewlett-Packard LaserJet printers, and compatibles.

The following command shows what you would use if you want to print a PostScript file to a 3900 print queue from the AIX command line.

```
# enq -Pq3900 -odatatype=ps file1.ps
```

Note: We will discuss this in greater detail in 7.7, “PSF/6000 Printing” on page 171.

This data stream capability allows you to print files created on mainframe systems on desktop printers, or files created in an AIX workstation on high speed printers.

In order to print PostScript, ditroff, S/370 line data, uformatted ASCII, Double-byte character set (DBCS) ASCII, or Extended UNIX Code (EUC) files, you have to transform the file to AFP data stream via PSF/6000. You can optimize your system by separating transform processing, which now is going to be done on the PSF/6000 server, from the print processing.

7.1.3 PSF/6000 Resources

In the AFP architecture, a resource is considered as a file that contains the information that is used in a print job. The PSF/6000 driver can accept the following resources.

- Fonts (typography used to print the text in a file)
- Overlays (electronic forms)
- Page segments (graphics, text, and images)
- Form definition (descriptions about how the data is positioned on the physical page)
- Page definitions (descriptions about how line data is formatted and printed on the physical page)

PSF/6000 is able to search for the resources needed for the print file at print time. The resource can be located elsewhere on the system and can be referenced in the job, instead of being provided as part of the print file. These resources can reside in any AIX directory or mounted directories such as MVS data sets and VM minidisks. If mounted, in order to have access you can use Network File System (NFS). When you submit a job, the resource information and print job are sent together to the printer.

The way in which PSF/6000 handles the resources allows the system administrator to have more control over confidential resources such as check-signing signatures. In addition, when the job has finished, PSF/6000 deletes the resources from the printer unless you tell it to do otherwise. When you tell PSF/6000 not to delete the resources, you can send another job that needs the same resources without spending processing and transmission time.

The default resource library for PSF/6000 is located in the /usr/lpp/psf/reslib subdirectory.

You can add or modify resources to the directory without interrupting the PSF/6000 processing. All you have to do is to let your users know where the additional resources are stored.

There is a separately orderable feature called IBM Page Printer Formatting Aid/6000 (PPFA/6000), which is used to create your own form definitions and page

definitions, which can be added as another resource to a resource library. In addition, overlays created in other environments can be printed directly or used by creating a form definition that specifies the overlay.

7.1.4 PSF/6000 Environments

PSF/6000 works in many environments and it doesn't require a dedicated server. However, if you are going to manage many printers, a dedicated server would be very suitable for performance reasons. When you have multiple printers with multiple data streams, the PSF/6000 has to make all the transformations, which makes other applications run slower due to transformation proccess.

PSF/6000 can work in the following environments:

- Stand-Alone Printing
- LAN Printing
- Distributed Printing Using TCP/IP and the Network File System

Stand-Alone Printing: In this environment, you can have multiple ASCII terminals or graphical displays from which you can submit print jobs. All the input data streams are generated on the host with PSF/6000 installed.

LAN Printing and Distributed Printing: In a Local Area Network (LAN), you can submit print jobs to the printers attached directly to the workstation and to printers attached remotely (printers attached to other workstations or printers attached directly to the network).

When you want to print to any kind of printer through PSF/6000 in a LAN environment from a client, you have to use the lpd daemon, which comes with TCP/IP. This daemon provides access to the remote PSF/6000 print server. In addition, you can have access to files from another system on the LAN using Network File System.

A client uses the `lpr` command for printing remotely to any kind of printer. Clients can be on any platform connected via TCP/IP to the LAN. The TCP/IP of each client has to support the `lpr` command; otherwise you can print via File Transfer Protocol. This means that you have to transfer a file to the workstation and then type a print command, such as `enq`, to print the file.

In addition, PSF/6000 supports SP2* processors using TCP/IP.

7.2 Printer Installation and Configuration for PSF/6000

Before the installation of the printers we recommend you add the following statement to your PATH:

```
/usr/lpp/psf/bin
```

After adding this statement you will be able to access PSF/6000 commands.

If you want to verify if the PATH variable has taken effect, enter the following command:

```
# echo $PATH
```

As a result of this command you should see something like this:

```
/usr/bin:/etc:/usr/sbin:/usr/ucb:/usr/bin/X11:/sbin:/usr/lpp/psf/bin
```

The next sections describe the possible printer attachments which can be configured through PSF/6000. These sections includes:

- AIX-Defined Printers Installation and Configuration
- Channel-Attached IPDS Printers Installation
- TCP/IP-Attached IPDS Printers Installation

7.3 AIX-Defined Printers Installation and Configuration

An AIX-defined printer could be a parallel printer, a serial printer using a serial cable with a null-modem (interposer), or a LAN printer directly attached to the network via IBM 4033 or an Integrated Network Adapter (INA), using the common AIX SMIT options for installing printers and queues. Then the queue is defined in PSF/6000 in order to have the ability to print from many types of clients with different input data streams, regardless of the data stream supported by the printer.

7.3.1 Installing a AIX-Defined Printer

The printer that you can install could be, as mentioned, a parallel, serial, or LAN printer via IBM 4033. This example shows the installation of a parallel printer.

Note: You must have printq group or root user authority to configure the printer as an AIX printer device.

To install an AIX-Defined printer follow these steps:

1. At the AIX command-line enter:

   ```
   # smit printer
   ```

2. From the Printer/Plotter panel select:

   `Printer/Plotter Devices`

3. From the Printer/Plotter Devices panel select:

   `Add a Printer/Plotter`

   You can go directly to this step, using the SMIT fastpath command: `makprt`.

4. From the Single Select list select the Lexmark IBM 4039 printer
5. Select a parallel adapter by choosing `parallel` from the screen, then press Enter.
6. Select `ppa0` for a parallel-attached printer and press Enter

7. From the Add a Printer/Plotter panel type `p` as the port number
8. Accept all the default values for the other entry fields
9. Press Enter for an ASCII terminal or Do for AIXwindows interface.
10. Press F3 to exit SMIT

After the installation of the physical printer it is very important to test the printer device. For doing so, you have to print a job directly to the device, which in this case is lp0. Enter the following command:

```
# cat /etc/motd > /dev/lp0
```

If the message of the day did not print, check if the printer is powered on and if the power cable is correctly attached.

7.3.2 Configuring a Virtual Printer, Print Queue, and Queue Device.

In order to define a Virtual Printer, Print Queue, and Queue Device, you must have printq or root user authority. Follow these steps:

1. In the AIX-Command line enter:

   ```
   # smit printer
   ```

2. Select from the Printer/Plotter SMIT panel:

   ```
   Manage Local Printer Subsystem
   ```

3. Select from Manage Local Printer Subsystem SMIT panel:

   ```
   Add a Virtual Printer
   ```

4. From this window select option number 1, to specify that you want a printer attached directly to the host, then press Enter.
5. In the next screen, you have to put the device name for the virtual printer you want to define (in this case we are using lp0), then press Enter.
6. Now you have to specify if you want a header and/or a trailer page. Since PSF/6000 provides header and trailer pages, you have to select your options as follows:

   ```
   Header pages wanted?  (n=none; a=each file; g=each job):  ->  n
   Trailer pages wanted? (n=none; a=each file; g=each job):  ->  n
   ```

7. SMIT then prompts you to configure the multiple data streams which this printer will support. In this case we define the PostScript data stream, and the PCL (HP Laserjet III Emulation, which is PCL5). Select the PCL queue as the default queue, then press Enter.

```
Header pages wanted?  (n=none; a=each file; g=each job):  -> (n)  n
Trailer pages wanted? (n=none; a=each file; g=each job):  -> (n)  n
NOTE:   The 4039 printer supports multiple print data streams.
        Each of the data streams will now be configured individually.
--------------------  PostScript Language  --------------------
Enter print queue name (or, ! to bypass configuration):   -> (ps)  ps
Should this queue be the default queue? -> (y)  n
4039 (PostScript Language) configured for print queue ps
--------------------  PCL Emulation  --------------------
Enter print queue name (or, ! to bypass configuration):   -> (pcl) pcl
Should this queue be the default queue? -> (y)  y
4039 (PCL Emulation) configured for print queue pcl

Press Enter to continue.
```

8. You are back to the Virtual Printer SMIT Panel, press F10 to exit SMIT
9. Print a file to ensure that the virtual printer is defined correctly. Enter the following command:

```
# enq -P pcl /etc/qconfig
```

7.3.3 Adding a PSF/6000 Queue for PCL Output

In order to use an AIX PCL queue as a PSF/6000 queue you have to follow these steps:

1. From the command line enter the following command:

```
# smit devices
```

2. From the Devices panel select:

   `PSF/6000 Printer Definition`

3. From the PSF/6000 Printer Definition panel select:

   `Add a Printer or PSF/6000 Queue`

4. From the Add a Printer or PSF/6000 Queue panel select:

   `AIX-Defined (Parallel, Serial, or LAN)`

5. From the Data Stream Type panel select:

   `PCL4 or PCL5 or PCL5C`

   This is depending on the data stream emulation of your printer.

6. The Add a PSF/6000 Queue for AIX-Defined Printer panel is displayed.

   In this panel, you have to fill in the required values as follows:

```
                Add a PSF/6000 Queue for AIX-Defined Printer

Type or select values in entry fields.
Press Enter AFTER making all desired changes.

                                                      [Entry Fields]
* Data stream type                                    PCL5
* Printer NAME                                        [qaix]                  /
* COMMAND to execute for printer output               [qprt -P pcl -dp -Z!]   +
  Description                                         [AIX/PSF6000 queue]
  To specify other characteristics after you add
  a printer, select Change Characteristics of
  a Printer from the
  PSF/6000 Printer Definition panel.


F1=Help             F2=Refresh          F3=Cancel           F4=List
F5=Reset            F6=Command          F7=Edit             F8=Image
F9=Shell            F10=Exit            Enter=Do
```

Note: You can change the COMMAND to execute for print er field, so instead of using the pcl queue, you can use the 4019pcl queue. For doing so, change the command as follows.

```
* COMMAND to execute for printer output              [qprt -P 4019pcl -dp -Z!]:
```

7. You can use lpstat or enq -A commands to display the queues and their status as follows:

```
# lpstat

Queue   Dev   Status    Job Files              User         PP %   Blks  Cp Rnk
------- ----- --------- --- ------------------ ---------- ---- -- ----- --- ---
pcl     lp0   READY
bsh     bshde READY
ps      lp0   READY
qaix    dev1  READY
```

8. Use the enq command to test the PSF/6000 queue:

```
# enq -Pqaix /etc/qconfig
```

7.4 Channel-Attached Printer Installation

In order to install some IPDS printer, you have to use S/370 Channei Emulator/A adapter in the RISC System/6000. This would be the primary task involved in setting up a channel-attached IPDS printer. We recommend the assistance of the IBM Pennant service representative.

This section includes the tasks you have to perform to:

1. Shut down and power off your system
2. Install the S/370 Channel Emulator/A adapter
3. Configure PSF/6000 for the channel-attached printer
4. Verify the S/370 channel attachment

After the physical installation of the adapter, all you have to do is to power on the RISC System/6000, so it can recognize the installed adapter.

7.4.1 Installing the S/370 Channel Emulator/A Adapter

Follow these steps for installing the S/370 Channel Emulator/A:

1. Record the slot number in which the adapter was installed. In this case, we are using slot number 2.
2. Obtain the Control Unit Address of the printer from the IBM Pennant service representative.

   The Control Unit Address we are using is 1B.
3. The Printer we are using is an IBM 3825 with a High Speed Data Streaming (2.5MB).
4. With the help of the IBM Pennant service representative, attach the the black cable supplied with the S/370 Channel Emulator/A adapter to the bus and tag cables of the printer and to the RISC System/6000.
5. Make sure that the terminators for the bus and tag channels are installed in the last device connected in series to the S/370 Channel Emulator/A adapter.
6. Power on the IBM 3825 printer and all other devices attached to the RISC System/6000.

7.4.2 Loading the S/370 Channel Emulator/A Device Driver

To load the device driver onto the adapter perform the following tasks:

1. Enter the following command at the AIX command-line prompt:

```
# smit psfcfg
```

2. Select `Load Driver onto S/370 Channel Emulator/A Adapter`. The following screen is displayed:

```
                          Adapter Selection

Move cursor to desired item and press Enter.

  chna0      Available 00-02       IBM S/370 Channel Emulator/A Adapter

F1=Help                 F2=Refresh              F3=Cancel
F8=Image                F10=Exit                Enter=Do
/=Find                  n=Find Next
```

3. Press Enter

   Note: You must load the device driver on each S/370 Channel Emulator/A Adapter.

7.4.3 Configuring PSF/6000 for Channel-Attached Printer

To configure PSF/6000 for a Channel attachment perform the following tasks:

1. Enter the following command at the AIX command-line prompt:

```
# smit psfcfg
```

2. Select `Add a Printer or PSF/6000 Queue` in the following panel:

```
                          PSF/6000 Printer Definition

Move cursor to desired item and press Enter.

  List All Printers Defined to PSF/6000
  Load Driver onto S/370 Channel Emulator/A Adapter
  Add a Printer or PSF/6000 Queue
  Show / Change Characteristics of a Printer
  Remove a Printer




F1=Help             F2=Refresh          F3=Cancel           F8=Image
F9=Shell            F10=Exit            Enter=Do
```

3. Select `S/370 Channel Emulator/A Adapter` from the following panel:

```
                       Add a Printer or PSF/6000 Queue

Move cursor to desired item and press Enter.

  S/370 Channel Emulator/A Adapter
  AIX-Defined (Parallel, Serial, or LAN)
  TCP/IP




F1=Help             F2=Refresh          F3=Cancel           F8=Image
F9=Shell            F10=Exit            Enter=Do
```

4. Fill the required fields as follows:

```
                    Add a S/370 Channel-Attached Printer

Type or select values in entry fields.
Press Enter AFTER making all desired changes.

                                                      [Entry Fields]
* Data stream type                                    IPDS
* Printer NAME                                       [q3825]
* SLOT number for S/370 Channel Emulator/A Adapter
* Control unit ADDRESS                               [1B]
* Number of QUEUE DEVICES                            [4]
  Description                                        [PSF/6000 IPDS PRT]
  To specify other characteristics after you add
  a printer, select Change Characteristics of
  a Printer from the
  PSF/6000 Printer Definition panel.


F1=Help             F2=Refresh          F3=Cancel           F4=List
F5=Reset            F6=Command          F7=Edit             F8=Image
F9=Shell            F10=Exit            Enter=Do
```

5. For the SLOT Number field, Press F4 to select the slot number from t he list:

```
            SLOT number for S/370 Channel Emulator/A Adapter

   Move cursor to desired item and press Enter.

     2

   F1=Help                 F2=Refresh              F3=Cancel
   F8=Image                F10=Exit                Enter=Do
   /=Find                  n=Find Next
```

6. Press Enter.

7.4.4 Verifying the S/370 Channel Attachment

To verify that the device driver has been loaded and that a connection has been made with the printer, follow these steps.

1. You must bring down all queue devices for the PSF/6000 print queue and kill any instances of PSF/6000 associated with the queue devices by using the following command:

```
# psfctl -dt q3825
```

2. Enter the following command:

```
# sense 21B
```

The first number is the number of the slot in which the S/370 Channel Emulator/A adapter is installed, and the second two numbers are the Control Unit Address.

The results that you can obtain from the `sense` command, are the following:

1. Printer ready and correctly attached:

```
printer connected at address 21B
00 00 00 81 00 00 00 00 00 00 00 00 00 00 00 00 00 00 00 00 00 00 00 00
```

2. Printer correctly attached; however, the printer is not ready to receive jobs.

```
printer connected at address 21B
40 00 03 01 00 04 00 00 00 00 00 00 00 00 00 00 00 00 00 00 00 00 00 00
```

3. Printer is not correctly attached or printer is turned off.

   In this case you should check that everything is correctly attached, and that the slot number and the control unit address are correctly entered in the `sense` command.

```
printer not connected at address 21B
```

4. Printer is either not configured or not configured correctly

```
printer not defined at address 21B
```

   In addition, the `sense` command also issues this message if you entered the command without first bringing down all queue devices for the PSF/6000 print queue and killing any instances of PSF/6000 associated with the queue devices with the `psfctl` command.

5. If you want to check that the device driver is correctly loaded onto the S/370 Channel Emulator/A adapter, enter the following command:

```
# lsdev -C -l afp0
```

   Where afp0 is the device driver.

   The following message means that the device driver has been loaded:

```
afp0 Available 00-03-00 IBM S/370 Channel Emulator/A Printer Driver
```

6. Test the printer by entering the following commands:

```
# psfctl -u q3825
```

The previous command brings up the PSF/6000 queue.

The following command sends a print file to the queue:

```
# enq -P q3825 /etc/motd
```

7.5 Installing an i-data 7913 IPDS Printer LAN Attachment

This section describes the tasks you need to perform in order to install and configure an i-data 7913 IPDS Printer LAN Attachment. This attachment is required for PSF/6000 to print on IBM coaxial and twinaxial printers. You need one i-data 7913 Printer Lan Attachment for each printer you plan to install; each i-data 7913 Printer Lan Attachment is installed and configured separately. This section includes the following topics:

1. Understanding the use of the i-data 7913 IPDS Printer LAN Attachment
2. Understanding how the i-data 7913 IPDS Printer LAN Attachment fits into network configurations
3. Configuring the bootp daemon
4. Setting up the i-data 7913 IPDS Printer LAN Attachment
5. Configuring PSF/6000 for a TCP/IP-attached printer
6. Updating the 7913 microcode
7. Storing the IP address in the 7913's non-volatile memory

7.5.1 Understanding the Use of the i-data 7913 IPDS Printer LAN Attachment

The i-data 7913 makes it possible to directly attach Pennant IPDS printers on token-ring and Ethernet LANs. The i-data 7913 IPDS Printer LAN Attachment can be attached anywhere on the network cable, bringing the printers closer to the end user and increasing productivity.

The i-data 7913 IPDS Printer LAN Attachment can be ordered via printer RPQ #8B4311 for a token-ring Attachment and RPQ #8B4312 for an Ethernet Attachment.

Basically the i-data 7913 IPDS Printer LAN Attachment is a hardware protocol converter you can use to communicate between PSF/6000 and coaxial and twinaxial IPDS printers. The i-data 7913 IPDS Printer LAN Attachment requires TCP/IP communication protocols.

When you plug in the i-data 7913 IPDS Printer LAN Attachment, it issues an initialization sequence request (bootp request), which contains its hardware MAC address, to all systems available to it through the network (this is the same procedure performed by Xstation). The bootp daemon (bootpd) running on a server checks its /etc/bootptab file for the MAC address. If it finds a match, the bootp server returns an IP address, a subnet mask, and other information to the i-data 7913 Printer LAN Attachment.

7.5.2 Understanding How the i-data 7913 IPDS Printer LAN Attachment Fits into Network Configurations

You can set up the i-data 7913 Printer LAN Attachment according to the following configurations.

7.5.2.1 Configuration 1

This configuration consists of one RISC System/6000 print server that contains all the software required for PSF/6000 to drive printers, and the TCP/IP bootp daemon to control the 7913 initialization processes.

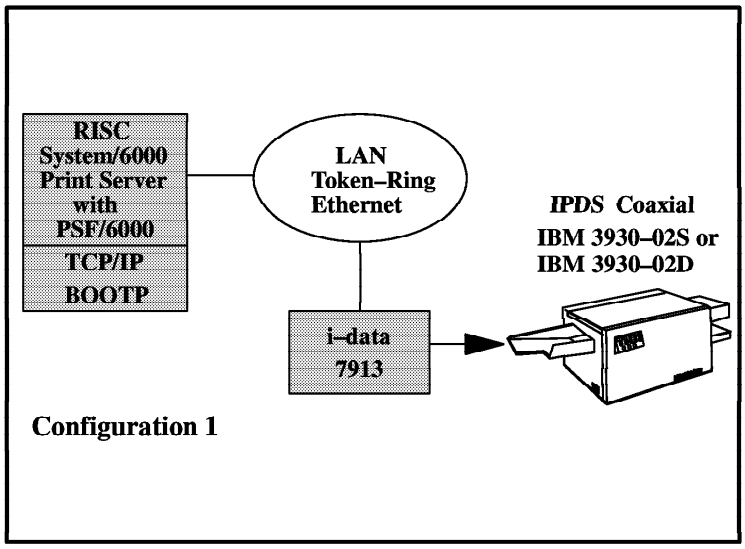

Figure 42. i-data 7913 Attachment Configuration 1

7.5.2.2 Configuration 2

When you already have a TCP/IP network installed with the bootp daemon on another server, you can use this configuration.

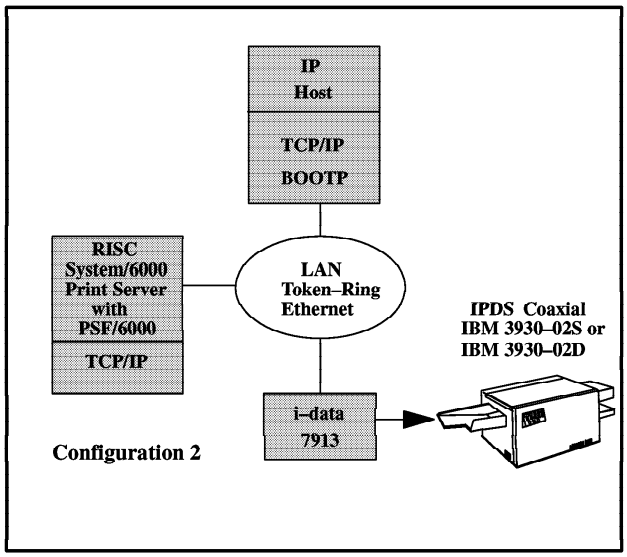

Figure 43. i-data 7913 Attachment Configuration 2

7.5.3 Configuring the bootp Server

In order to configure the bootp server, you first have to request an IP address, the subnet mask value and the MAC address of the i-data 7913 IPDS Printer LAN Attachment from your Network Administrator. In addition, in some cases you probably will need the gateway address.

In this case we are using these values:

```
IP Address       9.3.1.31

Subnet mask      255.255.255.0

Gateway address  9.3.1.74
```

If you are using a token ring network, you also have to know the speed of the network. This could be either 4 Mb/s or 16 Mb/s.

The speed of our token-ring network is 16 Mb/s.

If you are going to use an Ethernet network, you need to know:

- The type of cable you are going to use. The most common types of cable for an Ethernet network are 10base2 or 10baseT.
- Depending on the cable you are using, you need either BNC connectors for 10base2 cable or RJ45 connectors for 10baseT

All of these requirements assume that you have installed either an IBM Token-Ring Network or an Ethernet LAN operating correctly.

Now we can start to configure the bootp server by following these steps:

1. Edit the /etc/bootptab file using the vi editor:

```
vi /etc/bootptab
```

2. Add the following line to the bottom of the file and save the file:

```
# Legend:
#
#       first field -- hostname
#                      (may be full domain name and probably should be)
#
#      hd   -- home directory
#      bf   -- bootfile
#      sa   -- boot server IP address
#      gw   -- gateways
#      ha   -- hardware address
#      ht   -- hardware type  --- Number 6 for Token-Ring, Ethernet for
#                                                          Ethernet
#      ip   -- host IP address
#      sm   -- subnet mask
#      tc   -- template host (points to similar host entry)
#      hn   -- name switch
#      bs   -- boot image size
#      T170 -- (xstation only) -- server port number
#      T175 -- (xstation only) -- primary / secondary boot host indicator
#      T176 -- (xstation only) -- enable tablet
#      T177 -- (xstation only) -- xstation 130 hard file usage
#      T178 -- (xstation only) -- enable XDMCP
#      T179 -- (xstation only) -- XDMCP host
#      T180 -- (xstation only) -- enable virtual screen
P4028:ht=6:ha=2334FFFF4E12:ip=9.3.1.31:sm=255.255.255.0
:wq
```

3. Check in the /etc/services file to see if there are entries for bootps and bootpc. The following screen shows the /etc/services file:

```
# vi /etc/services


domain          53/tcp          nameserver # name-domain server
domain          53/udp          nameserver
mtp             57/tcp           # deprecated
bootps          67/udp           # bootp server port
bootpc          68/udp           # bootp client port
tftp            69/udp
rje             77/tcp          netrjs
finger          79/tcp
link            87/tcp          ttylink
supdup          95/tcp
hostnames       101/tcp         hostname # usually from sri-nic
iso_tsap        102/tcp
x400            103/tcp
x400-snd        104/tcp
csnet-ns        105/tcp
pop             109/tcp         postoffice
sunrpc          111/tcp
```

Note: If these entries are not in the file, you must add them by editing the file using vi.

4. Start the bootp daemon using the inetd super-daemon
5. Edit the /etc/inetd.conf file and uncomment the bootps entry:

```
# vi /etc/inetd.conf


chargen stream  tcp     nowait  root    internal
chargen dgram   udp     wait    root    internal
ftp     stream  tcp     nowait  root    /etc/ftpd ftpd
telnet  stream  tcp     nowait  root    /etc/telnetd telnetd
time    stream  tcp     nowait  root    internal
time    dgram   udp     wait    root    internal
bootps  dgram   udp     wait    root    /etc/bootpd bootpd
#tftp   dgram   udp     wait    nobody  /etc/tftpd tftpd -n
#finger stream  tcp     nowait  nobody  /etc/fingerd fingerd
#rexd   sunrpc_tcp tcp  wait    root    /usr/etc/rpc.rexd rexd 100017 1
#rstatd sunrpc_udp udp  wait    root    /usr/etc/rpc.rstatd rstatd 100001 1-3
#rusersd        sunrpc_udp udp  wait    root    /usr/etc/rpc.rusersd rusersd 100
 :wq
```

6. Due to the changes made to the /etc/inetd.conf file, you have to refresh inetd, using the following commands:

```
# inetimp
# refresh -s inetd

0513-095 The request for subsystem refresh was completed successfully.
```

7.5.4 i-data 7913 Printer LAN Attachment and Printer Setup

Since we are going to use a token-ring attachment, we are using the i-data 7913 IPDS Printer LAN Attachment Model 03. For an Ethernet attachment you will need Model 04.

7.5.4.1 Setting the Controls for the i-data 7913 IPDS Printer LAN Attachment Token-Ring Network Model

For this model, you have to set the RINGSPEED acording to the token-ring speed of your network, in this case 16 Mb/s. Also you have to define the type of printer you are going to use, in this case we select coax because the IPDS IBM 4028-NS1 has coaxial attachment.

Make sure that 7913 is unplugged while you are making the changes.

7.5.5 Attaching the i-data 7913 Printer LAN Attachment

To attach the i-data 7913 Printer LAN Attachment to the LAN and printer follow these steps:

1. Attach the i-data 7913 Printer LAN Attachment to the LAN using an IBM Token-Ring cable
2. Attach the i-data 7913 Printer LAN Attachment to the printer using the coaxial cable
3. For coaxial printers, clamp the ferrite cable block to the coaxial cable approximately 10 cm (4 inches) from the 7913.
4. Power on the 4028
5. Plug in the 7913

   The POWER light goes on and the LAN light blinks several seconds later, which means that the 7913 is active on the IBM Token-Ring network. The

blinking is caused when the 7913 sends out its bootp request. Once the reply from the `bootp` daemon is received, the LAN light stops blinking.

6. Ping the 7913 and press Ctrl-C to stop pinging, as follows:

```
# ping 9.3.1.31

PING 9.3.1.31: (9.3.1.31): 56 data bytes
64 bytes from 9.3.1.31: icmp_seq=0 ttl=255 time=1 ms
64 bytes from 9.3.1.31: icmp_seq=1 ttl=255 time=1 ms
64 bytes from 9.3.1.31: icmp_seq=2 ttl=255 time=1 ms
64 bytes from 9.3.1.31: icmp_seq=3 ttl=255 time=1 ms
64 bytes from 9.3.1.31: icmp_seq=5 ttl=255 time=1 ms

----9.3.1.31 PING Statistics----
5 packets transmitted, 5 packets received, 0% packet loss
round-trip min/avg/max = 1/1/1 ms
```

7.6 Configuring PSF/6000 for a TCP/IP-Attached Printer

Once you have configured the i-data 7913 or you are connecting an IPDS printer that connects directly to the LAN (such as the 3935 or 3900-0w1), you have to configure PSF/6000 for a TCP/IP attached printer. Follow these steps:

1. Enter the `smit psfcfg` command at the AIX command-line prompt
2. Select `Add a Printer or PSF/6000 Queue` from the following panel:

```
                          PSF/6000 Printer Definition

Move cursor to desired item and press Enter.

  List All Printers Defined to PSF/6000
  Load Driver onto S/370 Channel Emulator/A Adapter
  Add a Printer or PSF/6000 Queue
  Show / Change Characteristics of a Printer
  Remove a Printer




F1=Help             F2=Refresh          F3=Cancel           F8=Image
F9=Shell            F10=Exit            Enter=Do
```

3. Select `TCP/IP` from the following panel:

```
                       Add a Printer or PSF/6000 Queue

Move cursor to desired item and press Enter.

  S/370 Channel Emulator/A Adapter
  AIX-Defined (Parallel, Serial, or LAN)
  TCP/IP



F1=Help             F2=Refresh          F3=Cancel           F8=Image
F9=Shell            F10=Exit            Enter=Do
```

4. Fill all the required fields as follows:

```
                        Add a TCP/IP Attached Printer

Type or select values in entry fields.
Press Enter AFTER making all desired changes.

                                                      [Entry Fields]
* Data stream type                                     IPDS
* Printer NAME                                        [q7913]
* Internet Address                                    [9.3.1.31]
* PORT number                                         [5001]
* Number of QUEUE DEVICES                             [2]
* Connection TIMEOUT (seconds)                        [30]
  Description                                         [TR 4028 att'd via 7913]
  To specify other characteristics after you add
    a printer, select Change Characteristics of
    a Printer from the
    PSF/6000 Printer Definition panel.


F1=Help             F2=Refresh          F3=Cancel           F4=List
F5=Reset            F6=Command          F7=Edit             F8=Image
F9=Shell            F10=Exit            Enter=Do
```

For the QUEUE DEVICES field we suggest that you define only 2 devices, because the IBM 4028 printer is relatively slow and it doesn't have to wait for the jobs to be processed. In addition, you need to be aware that with each device defined to PSF/6000, PSF/6000 loads an instance of itself into memory. The more queue devices used, the more memory PSF/6000 will need.

5. Exit SMIT by pressing F10
6. Enter the `lpstat` or `enq -A` commands for checking the status of the queue:

```
# lpstat
Queue   Dev   Status    Job Files              User         PP %   Blks  Cp Rnk
------- ----- --------- --- ------------------ ---------- ---- -- ----- --- ---
r41     dev1  READY
r41     4019a READY
pcl     lp0   READY
bsh     bshde READY
ps      lp0   READY
qaix    dev1  READY
psfppds dev1  READY
q7913   dev1  READY
q7913   dev2  READY
```

7. Test the queue by sending a print file to print:

```
# enq -Pq7913 /etc/motd
```

7.7 PSF/6000 Printing

AIX has several commands used for submitting print jobs. These commands are `enq`, `lp`, `qprt`, and `lpr`.

You can use any of these commands to submit PSF/6000 print jobs, just as you do for AIX print jobs. The only difference is that you can use the `-o` flag to pass information to PSF/6000.

The `-o` flag on the `lpr` is not supported by all operating systems.

You can also use SMIT panels to submit PSF/6000 print jobs.

This section describes the tasks you have to perform to:

- Print from SMIT panels
- Print from the command-line
- Print PostScript files
- Print AFP Data Stream Files

7.7.1 Printing from SMIT Panels

When you are going to print with SMIT you must use a full path name for the file you want to print. In order to print using this interface follow these steps:

1. At the command-line prompt, enter `smit spooler`
2. Select `Start a PSF/6000 Print Job` from the following panel:

```
                              Spooler (Print Jobs)

Move cursor to desired item and press Enter.

  Start a Print Job
  Start a PSF/6000 Print Job
  Cancel a Print Job
  Show the Status of Print Jobs
  Prioritize a Print Job
  Schedule Jobs
  Manage Local Printer Subsystem
  Manage Remote Printer Subsystem



F1=Help             F2=Refresh          F3=Cancel           F8=Image
F9=Shell            F10=Exit            Enter=Do
```

3. In the following panel, select the appropriate type of data. There is a specific panel with different options for each type of data. Select a PostScript file:

```
     PostScript
     ditroff
     PCL
     AFPDS
     MODCA-P
     S/370 line data (EBCDIC; format with a page definition)
     ASCII (no escape sequences; format with a page definition)
     ASCII
     DBCS ASCII
     Extended UNIX Code (EUC)

   F1=Help                 F2=Refresh              F3=Cancel
   F8=Image                F10=Exit                Enter=Do
   /=Find                  n=Find Next
```

4. Fill the required fields as follows:

```
                Start a PSF/6000 Print Job - PostScript Data

Type or select values in entry fields.
Press Enter AFTER making all desired changes.

                                                    [Entry Fields]
* FILE to print                                     [/usr/lpp/psf/ps2afp/sample.ps]
  Print QUEUE                                       [q7913]
* Data TYPE                                         PostScript
  PostScript transform OPTIONS file                 []
  NUMBER of copies                                  [1]
  Input BIN                                         [use form      definition]
  Duplex                                            use form definition     +
  FORM DEFINITION name                              []
  Printer RESOLUTION                                300                     +
  Type of IMAGE DATA to produce                     IOCA-Group 4 compressi> +
  Image LENGTH                                      []
  Image WIDTH                                       []
  Other PostScript TRANSFORM options                []
  Search path for OVERLAYS                          []
  Search path for PAGE SEGMENTS                     []
  Search path for FORM DEFINITIONS                  []
  Search path for FONTS                             []
  Number of MESSAGES to print                       [9999]     .
  Send NOTIFICATION of job status?                  no                      +
  Type of PRINT DATA ERRORS to report               none                    +
  Job NAME                                          []
  Distribution                                      []
  Print HEADER page?                                yes                     +
  Print TRAILER page?                               yes                     +
  Print SEPARATOR pages?                            yes                     +
  Make a COPY of the file on the local host?        no                      +
      (Applicable to local print jobs only.)
  ERASE the file from the system after printing?    no                      +
  CONSOLE acknowledgement message                   []
  FILE acknowledgement message                      []
  Priority LEVEL                                    [15]

F1=Help             F2=Refresh          F3=Cancel           F4=List
F5=Reset            F6=Command          F7=Edit             F8=Image
F9=Shell            F10=Exit            Enter=Do
```

5. You can also use the `smit qprt` command to print a file. In this case you have to fill the required fields as follows:

```
                              Start a Print Job

Type or select values in entry fields.
Press Enter AFTER making all desired changes.

                                                      [Entry Fields]
* FILE to print                                      [/etc/motd]
  PRINT QUEUE:[Queue Device]                         [q3825]
  NUMBER of copies                                   [1]
  Make a COPY of the file on the local host?          no                      +
      (Applicable to local print jobs only.)
  ERASE the file from the system after printing?      no                      +
  Send notification of job status?                    no                      +
* BURST status                                       no burst pages          +
  USER NAME for 'Delivery to' output label           []
  CONSOLE acknowledgement message for                []
      remote print
  FILE acknowledgement message for                   []
      remote print
  Priority LEVEL.                                    [15]
      Enter a number between 0 and 20.  A user with
      administrative privileges for the qpri
      command may enter a number between 0 and 30.
      (Larger numbers indicate higher priorities.)


F1=Help             F2=Refresh          F3=Cancel           F4=List
F5=Reset            F6=Command          F7=Edit             F8=Image
F9=Shell            F10=Exit            Enter=Do
```

Note: This is only valid if the input data stream is AFP data stream or ASCII.

7.7.2 PSF/6000 Printing from the AIX Command Line

The commands for printing from the AIX command line are from a heritage of the UNIX and AIX operating systems. Due to this fact, these commands are also available for use with PSF/6000, with the addition of several PSF/6000-specific parameters:

- `enq -P queuename -o keyword=value filename`
- `qprt -P queuename -o keyword=value filename`
- `lp -d queuename -o keyword=value filename`
- `lpr -P queuename filename`

If you are going to use `-o` flags, you must use a PSF/6000 queue, otherwise, AIX passes the `-o` options to the piobe daemon backend program instead of the PSF/6000 ainbe backend program. The piobe backend treats the `-o` options as file names. The print job does not print, and AIX issues the following message:

```
0782-040 Cannot open print file
```

This is an example of how to enter a print command using `-o` options for a PSF/6000 queue:

```
# enq -P q3825 -o datatype=ps -o duplex=yes sample2.ps
```

The most common PSF/6000 `-o` flags you can use for printing a document are the following:

`-o datatype` Input data type

`-o duplex` Printing or not on both sides of the page

`-o copies` Number of copies of a document (maximum 255)

`-o bin` Printer input bin

`-o formdef` Adds a specific form definition to a document

`-o -a IM` Instructs the PostScript transform to create IM1 images for printing of uncompressed image data

When you use the `-o` datatype flag, the transform commands are run automaticaly. The transform programs are the following:

- **ps2afp (datatype=ps)**: This command transforms a PostScript Level 2 data stream file to an AFP data stream file
- **line2afp (datatype=line)**: This command transforms ASCII and Line data to an AFP data stream file
- **db2afp (datatype=dbcsascii)**: This command transforms Double Byte Character Set data stream files to an AFP data stream file
- **pcl2afp (datatype=pcl)**: This command transforms HP-PCL data into an AFP data stream
- **d2afp (datatype=ditroff)**: This command transforms ditroff data that has been formated for an AFP device into an AFP data stream

7.7.2.1 Printing Examples with PSF/6000

This section describes the tasks to perform in order to print from SMIT and the command line. The following examples are included:

- Printing an unformatted ASCII file
- Formatting and printing multiple copies of an ASCII file, using a page definition
- Printing an AFP data stream file

For these examples we are using the queues defined in other sections:

- The qaix queue, which is a PSF/6000 queue that uses an AIX-defined queue (PCL)
- The q3825 queue, which is a PSF/6000 queue associated with a Channel-Attached printer
- The q7913 queue, which is a PSF/6000 queue associated with a TCP/IP-Attached printer via the i-data 7913 IPDS Printer LAN Attachment

Follow these steps to print using the command line:

Printing an Unformatted ASCII file

1. Enter either of the following commands:

```
# enq -P q3525 /etc/motd

# qprt -P q3825 /etc/motd
```

2. To print the same files using SMIT follow these steps:
   a. Enter `smit psf` on the command line
   b. Select `ASCII` from the Type of Data panel
   c. Enter `/etc/motd` in the FILE to print field
   d. Enter `q3825` in the Print Queue field
   e. Press Enter to execute the printing request

Formatting and Printing Multiple Copies of an ASCII File: If you want to print a file downloaded from a mainframe in EBCDIC format, convert it to ASCII during the file transfer. Each line of the file is 100 bytes long.

This file is going to be printed 3 times (3 copies). We are also going to use a page definition that specifies two pages of information on a single physical page (2-up). For doing so, follow these steps:

1. Enter the following on the command line:

```
# enq -P qaix -odatatype=line -ofileformat=record,100  \
-ocopies=3 -opagedef=P1W12883 /u/hostfiles/invoice
```

   This command runs the `line2afp` transform command, which processes the invoice file, using the the values passed by the `-o` flags.

2. To print this example using SMIT, follow these steps:
   a. Enter `smit psf` at AIX command prompt
   b. Select `ASCII (no escape sequences; format with a page definition)`
   c. Enter /u/hostfiles in the FILE to print field
   d. Enter `qaix` in the Print Queue field
   e. Select `3` in the NUMBER of copies field
   f. Type `P1W12883` in the PAGE DEFINITION name field
   g. Select `record` in the Input file FORMAT field; type `100` for the record length
   h. Type `no` in the Convert print file into EBCDIC? field
   i. Press Enter

Printing an AFP Data Stream File: To print an AFP Data Stream file, enter the following command:

```
# enq -P q7913 demos.afp
```

In this case, you don't have to specify the type of data you are using because PSF/6000 receives AFP data streams without invoking any of the PSF/6000 transform commands.

To print using SMIT, follow these steps:

1. Enter `smit psf` at the AIX command line
2. Select `AFPDS`
3. Enter `demos.afp` in the FILE to print field
4. Enter `q7913` in the Print Queue field
5. Press Enter

7.7.2.2 Other PSF/6000 Printing Examples

This section describes more printing examples from the command line.

Printing a PostScript file: To print your PostScript file, enter the following command:

```
# enq -P q3825 -odatatype=ps sample.ps
```

To print a PostScript file with an specific resolution and form definition, enter the following command:

```
# qprt -Pq3825 -o-r300 -odatatype=ps -of=F1PP0120 sample.ps
```

The following command shows how this parameter is added so you can print uncompressed images.

```
# enq -Pq3825 -o datatype=ps -o -a IM -o formdef=F100D sample.ps
```

Another thing you can do, is to define an specific size of physical page so you can print PostScript files without getting off the physical page. For doing so follow these steps:

1. Edit /usr/lpp/psf/ps2afp/ps2afp.cfg file, which follows:

```
# vi /usr/lpp/psf/ps2afp/ps2afp.cfg


ps_max_memory = 6000K    # -M      maximum amount of memory that
                         #         PostScript uses; the 'K' is ignored

ps_job_timeout = 20      # -j      maximum number of minutes
                         #         to process PostScript job
ps_server_timeout = 20   # -s      maximum number of minutes
                         #         server waits between jobs

ps_width = 8.50i         # -w      width of generated image
ps_length = 11.00i       # -l      length of generated image
ps_x_offset = 0i         # -x      left and right margins
ps_y_offset = 0i         # -y      top and bottom margins
ps_resolution = 240      # -r      resolution of target printer
ps_output_type = IO1_G4  # -a      type of AFP image to generate
port = 8251              # -P      which TCP/IP port to use
server = 127.0.0.1       # -S      which server to connect with
```

2. Enter the width and the length of the page as shown above in the ps_width and ps_length parameters. In this case, we are using a width of 8.5 inches and a length of 11.0 inches.

Printing a ditroff file: To print a ditroff file, enter the following command:

```
#troff -Tafp images.trf | lp -d qaix -odatatype=ditroff
```

7.8 PSF/6000 Printing Management

There are multiple commands that you can use for managing queues. These commands are the same ones used for the standard AIX queue management functions. In addition PSF/6000 provides other commands for managing PSF/6000 queues.

This section describes the tasks you can perform to:

- Bring PSF/6000 queue down/up
- Bring PSF/6000 down/up for a print queue
- Remove a PSF/6000 queue

7.8.1 Bringing a PSF/6000 Queue Up/Down

To start or stop a PSF/6000 queue you must have root authority.

1. To start a queue enter following command:

```
# qadm -U q3825
```

Or:

```
# psfctl -u q3825
```

2. To stop a queue enter the following commands:

```
# qadm -D q3825
```

Or:

```
# psfctl -d q3825
```

3. You can also use SMIT for this task as follows:
   a. Enter the following command:

```
# smit spooler
```

   b. Select `Manage Local Printer Subsystem`
   c. Select `Local Printer Queues`
   d. Select `Stop` or `Start a Queue` in the following panel:

```
                              Local Printer Queues

Move cursor to desired item and press Enter.

  Stop a Queue
  Start a Queue
  List All Queues
  Add a Local Queue
  Change / Show Characteristics of a Queue
  Remove a Queue


F1=Help              F2=Refresh           F3=Cancel            F8=Image
F9=Shell             F10=Exit             Enter=Do
```

   e. Select a queue name from the Stop a Queue list by pressing F4 as follows:

```
                              QUEUE name

     Move cursor to desired item and press Enter.

     [TOP]
       r41:dev1
       pcl:lp0
       bsh:bshdev
       ps:lp0
       qaix:dev1
       psfppds:dev1
       q7913:dev1
       q7913:dev2
       r41
       pcl
       bsh


     F1=Help                F2=Refresh             F3=Cancel
     F8=Image               F10=Exit               Enter=Do
     /=Find                 n=Find Next
```

   f. Press Enter

7.8.2 Bringing PSF/6000 Up/Down for a Print Queue

You have to stop and restart PSF/6000 after changing characteristics of a PSF printer. In addition, you must stop all PSF/6000 instances before reinstalling or updating.

1. To stop PSF/6000 immediately, without the processing of the current job, enter the following command:

```
# psfctl -dk q3825
```

   Where `-k` kills the process of the current job and `-d` brings down PSF/6000

2. To stop PSF/6000 after processing the current job, enter the following command:

```
# psfctl -dt q3825
```

   Where `-t` kills the process after the printing process is completed, and `-d` brings down the queue.

3. To start PSF/6000, enter the following command:

```
# psfctl -u q3825
```

7.8.3 Removing a PSF/6000 queue

To remove a PSF/6000 queue follow these steps:

1. You have to have root authority to remove a PSF/6000 queue. Enter the following command to deactivate a PSF/6000 queue:

```
# psfctl -dt q3825
```

2. Check if the queue is down by entering the `lpstat` command:

```
# lpstat

Queue   Dev   Status    Job Files              User         PP %   Blks  Cp Rnk
------- ----- --------- --- ------------------ ---------- ---- -- ----- --- ---
bsh     bshde READY
q3825   dev1  DOWN
q3825   dev2  DOWN
q3825   dev3  DOWN
q3825   dev4  DOWN
#
```

3. To do this via SMIT, enter the following command:

```
smit psfcfg
```

4. Select `Remove a Printer` from the following panel:

```
                          PSF/6000 Printer Definition

Move cursor to desired item and press Enter.

  List All Printers Defined to PSF/6000
  Load Driver onto S/370 Channel Emulator/A Adapter
  Add a Printer or PSF/6000 Queue
  Show / Change Characteristics of a Printer
  Remove a Printer



F1=Help             F2=Refresh          F3=Cancel           F8=Image
F9=Shell            F10=Exit            Enter=Do
```

5. Select the queue you want to remove:

```
         Printer Name / Attachment / Data Stream / Description

   Move cursor to desired item and press Enter. Use arrow keys to scroll.

     q3825          channel      IPDS

   F1=Help                 F2=Refresh              F3=Cancel
   F8=Image                F10=Exit                Enter=Do
   /=Find                  n=Find Next
```

6. Press Enter in the `Are You Sure? Panel`

7.9 PSF/6000 Troubleshooting

This section describes the some common problems along with some solutions for solving these problems:

- If print jobs are not printing, make sure that all queues are up and running, by entering the `enq -A` or `lpstat` commands. Also ensure that there is enough disk space in the /tmp and /var filesystems.
- If PostScript files are not printing, make sure the PostScript transform daemon is running. To check for the process, enter the following command:

```
# ps -ef | grep ps2afp
```

  If the daemon is not running, restart it with the following command:

```
# cd /usr/lpp/psf/bin
# ./ps2afpd
```

- If a channel-attached printer is not working, verify the channel address of the printer by bringing PSF/6000 for the queue associated with the channel-attached printer down with the `psfctl -dt q3825` command.

Another problem is that you may be out of space in one or more of the AIX filesystems. To check filesystem space, enter the `df` command. You can erase smit.script and smit.log files for additional space. If more space is needed, you may need to increase the size of the /var filesystem.

7.10 Remote Printing From Client Systems (PSF/6000 Connectivity)

One of the major benefits of PSF/6000 is that it allows you to print from various platforms to high speed, high quality, non-impact printers through your your network. This means that many clients on varying platforms can access the AIX spooler and print their files on AIX printers as well as PSF/6000 printers, using the Line Printer Daemon (LPD).

In order to send print files to any remote printer using the AIX spool, you have to use the `lpr` command that is available in many TCP/IP implementations. The IBM platforms that currently support the `lpr` command are MVS, VM, AIX/ESA, AIX/6000, OS/400, OS/2, and DOS. The support of this command has to be checked in the documentation of other products.

Another way to route printing to the AIX spool and PSF/6000 would be to use file transfer protocol (FTP) to transfer the file to RISC/6000 print server, and then using the `enq` command for printing the file. One benefit of printing this way is that you can use the `-o` flag to pass additional printing parameters. This is not supported by the `lpr` command. However, other UNIX platforms are now able to pass parameters to PSF/6000, such as the use of a form definition, so they can print their flat ASCII variable information with an electronic form (overlay) referenced in the form definition.

PSF/6000 includes some sample lpr code for SUN OS, Solaris, HP-UX, and DEC Ultrix that allows the `-o` flag.

Another very important IBM TCP/IP feature, is the Network Print Facility (NPF) input record exit for MVS TCP/IP Version 3 release 1 (program numb er 5655-HAL), which allows MVS Job Entry Subsystem (JES) spool files and VTAM application data to be routed automatically to an AIX queue for printing by PSF/6000.

This section describes how users from different plataforms can send print jobs to a PSF/6000 server. All these clients use the `lpr` command. The following platforms are included:

- IBM AIX/6000 Version 4.1
- IBM VM
- IBM MVS
- IBM OS/400
- IBM OS/2 Version. 2.11.

The following schema shows all the possible clients that are able to print to any printer through a network using PSF/6000.

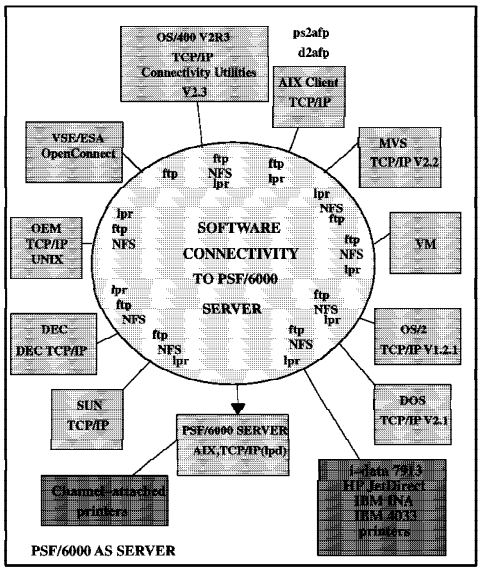

Figure 44. PSF/6000 Connectivity Diagram

7.10.1 Printing From an AIX 4.1 Client

In order to print from an AIX client you must have configured TCP/IP for both the client and the server. In addition you have to perform the following tasks:

- Update the server's /etc/hosts file (if you are not using a nameserver) to define the client to the server. For doing so, follow these steps:

  1. Edit the /etc/hosts file

```
# vi /etc/hosts
```

  2. Add the AIX client IP address and name:

```
# The format of this file is:
# Internet Address      Hostname        # Comments
# Items are separated by any number of blanks and/or tabs.  A '#'
# indicates the beginning of a comment; characters up to the end of the
# line are not interpreted by routines which search this file.  Blank
# lines are allowed.

# Internet Address      Hostname        # Comments
# 192.9.200.1           net0sample      # ethernet name/address
# 128.100.0.1           token0sample    # token ring name/address
# 10.2.0.2              x25sample       # x.25 name/address
127.0.0.1               loopback localhost      # loopback (lo0) name/address
9.3.1.28                psf6000 bob4.itsc.austin.ibm.com
9.3.8.1                 norm                    #PSF/6000 AIX 4.1 client
```

- Update the server's /etc/hosts.lpd file so that the client is allowed to send print files to a remote PSF/6000 printer on the server. Follow these steps:

  1. Edit the /etc/hosts.lpd file:

```
# vi /etc/hosts.lpd
```

2. Add the AIX client and name:

```
#
# where "netgroup" is an NIS netgroup defined in the netgroup map.  The
# '+' form allows access to any host in the netgroup, while the '-' form
# denies access to any host in the netgroup.
#
# Lines beginning with a '#' character and blank lines are ignored.
#
# Examples:
#
# host                  allows access to all users on host
# -host                 denies access to all users on host
# +@group               allows access to all users on hosts in group
# -@group               denies access to all users on hosts in group
9.3.8.1 norm            #PSF/6000 AIX 4.1 client
```

- Start the lpd daemon using the following command:

```
# startsrc -s lpd
```

- Check if the lpd daemon is active by entering the following command:

```
# lssrc -s lpd
```

The following screen will appear:

```
Subsystem         Group            PID     Status
 lpd              spooler          8080    active
```

7.10.1.1 Updating Server Files Using SMIT

In some cases you would like to update the server files using SMIT. For updating the /etc/hosts file (if you are not using a nameserver) perform the following steps:

1. At the command line enter the following command:

```
# smit tcpip
```

2. Select `Further Configuration` from TCP/IP SMIT panel
3. Select `Name Resolution` from the SMIT futher configuration panel
4. Select `Hosts Table (etc/hosts)` from the SMIT name resolution panel
5. Select `Add a Host`

   You have to fill all the required entry fields as follows:

```
                          Add a Host Name

Type or select values in entry fields.
Press Enter AFTER making all desired changes.

                                                        [Entry Fields]
* INTERNET ADDRESS (dotted decimal)                    [9.3.8.1]
* HOST NAME                                            [norm]
  ALIAS(ES) (if any - separated by blank space)        []
  COMMENT (if any - for the host entry)                []



F1=Help             F2=Refresh          F3=Cancel           F4=List
F5=Reset            F6=Command          F7=Edit             F8=Image
F9=Shell            F10=Exit            Enter=Do
```

6. Press Enter
7. Press F10 to exit SMIT

For updating the /etc/hosts.lpd file follow these steps.

1. In the command line enter the following command:

```
# smit TCPIP
```

2. Select `Further Configuration`
3. Select `Remote Printer Subsystem`
4. Select `Server Services`
5. Select `Host Access for printing`
6. Select `Add a Remote Host`
7. In the following screen fill the required entries as follows:

```
                            Add a Remote Host

Type or select values in entry fields.
Press Enter AFTER making all desired changes.

                                                        [Entry Fields]
* Name of Remote HOST                                  [norm]



F1=Help             F2=Refresh          F3=Cancel           F4=List
F5=Reset            F6=Command          F7=Edit             F8=Image
F9=Shell            F10=Exit            Enter=Do
```

8. Press Enter
9. Press F10 to exit SMIT

7.10.2 Updating the /etc/hosts File on the AIX 4.1 Client

To print from a AIX 4.1 client to a PSF/6000 printer you also have to add the server IP address to the client host table (/etc/hosts) (if it is not using a nameserver). For doing so, perform the following tasks:

1. From the AIX client, enter the following command:

```
# smit hosts
```

   Note: This is the fastpath command for going directly to the following screen. This fastpath can also be used for updating the server files.

```
                          Hosts Table (/etc/hosts)

Move cursor to desired item and press Enter.

  List All Hosts
  Add a Host
  Change / Show Characteristics of a Host
  Remove a Host




F1=Help             F2=Refresh          F3=Cancel           F8=Image
F9=Shell            F10=Exit            Enter=Do
```

2. Select `Add a Host`
3. Fill the required entries as follows:

```
                               Add a Host Name

Type or select values in entry fields.
Press Enter AFTER making all desired changes.

                                                       [Entry Fields]
* INTERNET ADDRESS (dotted decimal)                   [9.3.1.28]
* HOST NAME                                           [bob4]
  ALIAS(ES) (if any - separated by blank space)       []
  COMMENT (if any - for the host entry)               []




F1=Help             F2=Refresh          F3=Cancel           F4=List
F5=Reset            F6=Command          F7=Edit             F8=Image
F9=Shell            F10=Exit            Enter=Do
```

4. Press Enter
5. Press F10 to exit SMIT

7.10.3 Adding a Remote PSF/6000 Printer from an AIX 4.1 Client

The following procedure shows how an AIX 4.1 client can use a remote PSF/6000 printer.

7.10.3.1 Remote AIX-Defined Printer Configuration (V.4.1)

In order to use a PSF/6000 queue from AIX V.4.1 client, you have to define a remote queue on the PSF/6000 client. For doing so, follow these steps:

1. On the AIX V4.1 client command line enter:

```
# smit printer
```

2. Select `Print Spooling` from the following panel:

```
                              Printer/Plotter

Move cursor to desired item and press Enter.

  Printer/Plotter Devices
  Print Spooling

F1=Help          F2=Refresh          F3=Cancel          F4=List
F9=Shell         F10=Exit            Enter=Do           F8=Image
```

3. Select `Add a Print Queue` from the following panel:

```
                                  Print Spooling

Move cursor to desired item and press Enter.

  Start a Print Job
  Manage Print Jobs
  List All Print Queues
  Manage Print Queues
  Add a Print Queue
  Add an Additional Printer to an Existing Print Queue
  Change / Show Print Queue Characteristics
  Change / Show Printer Connection Characteristics
  Remove a Print Queue
  Manage Print Server
  Programming Tools

F1=Help            F2=Refresh          F3=Cancel            F8=Image
F9=Shell           F10=Exit            Enter=Do
```

4. Select the `remote` attachment type

```
                                Print Spooling

Move cursor to desired item and press Enter.

  Start a Print Job
  Manage Print Jobs
  List All Print Queues
  Manage Print Queues
  Add a Print Queue
  Add an Additional Printer to an Existing Print Queue
  Change / Show Print Queue Characteristics
  Change / Show Printer Connection Characteristics
  Remove a Print Queue
  Manage Print Server
  +-------------------------------------------------------------------------+
  |                           Add a Print Queue                             |
  |                                                                         |
  | Move cursor to desired item and press Enter. Use arrow keys to scroll.  |
  |                                                                         |
  |   # ATTACHMENT TYPE      DESCRIPTION                                    |
  |     local                Printer Attached to Local Host                 |
  |     remote               Printer Attached to Remote Host                |
  |     xstation             Printer Attached to Xstation                   |
  |     ascii                Printer Attached to ASCII Terminal             |
  |     hpJetDirect          Network Printer (HP JetDirect)                 |
  |     file                 File (in /dev directory)                       |
  |     other                User Defined Backend                           |
  |                                                                         |
  | F1=Help                 F2=Refresh              F3=Cancel               |
  | F8=Image                F10=Exit                Enter=Do                |
  | /=Find                  n=Find Next                                     |
  +-------------------------------------------------------------------------+
```

5. Select `Standard processing`

```
  +-------------------------------------------------------------------------+
  |                           Add a Print Queue                             |
  |                                                                         |
  | Move cursor to desired item and press Enter. Use arrow keys to scroll.  |
  +-------------------------------------------------------------------------+
  |                        Type of Remote Printing                          |
  |                                                                         |
  | Move cursor to desired item and press Enter.                            |
  |                                                                         |
  |     Standard processing                                                 |
  |     Standard with NFS access to server print queue attributes           |
  |     Local filtering before sending to print server                      |
  |                                                                         |
  | F1=Help                 F2=Refresh              F3=Cancel               |
  | F8=Image                F10=Exit                Enter=Do                |
  | /=Find                  n=Find Next                                     |
  +-------------------------------------------------------------------------+
```

6. On the following panel, you have to specify the name of the queue that you are going to use on the client system. Also, you have to enter the host name or the internet protocol (IP) address of the remote system, the name of the queue on the remote system to which the remote queue is going to be associated, and the type of spooler on the remote server.

```
                              Add a Standard Remote Print Queue

Type or select values in entry fields.
Press Enter AFTER making all desired changes.

                                                      [Entry Fields]
* Name of QUEUE to add                               [raixq]
* HOSTNAME of remote server                          [bob4]
* Name of QUEUE on remote server                     [q3825]
  TYPE of print spooler on remote server             AIX Version 3 or 4
  DESCRIPTION of printer on remote server            [LaserPrinter IBM 4039]




F1=Help             F2=Refresh            F3=Cancel          F4=List
F5=Reset            F6=Command            F7=Edit            F8=Image
F9=Shell            F10=Exit              Enter=Do
```

After you specified the values, press Enter.

Now, you have the following panel:

```
                                COMMAND STATUS

Command: OK            stdout: yes           stderr: no

Before command completion, additional instructions may appear below.

Added print queue 'raixq'.




F1=Help           F2=Refresh           F3=Cancel             F6=Command
F8=Image          F9=Shell             F10=Exit              /=Find
n=Find Next
```

7. Press F10 to exit SMIT
8. Enter the following command to test the remote queue:

```
# enq -P raixq /etc/qconfig
```

7.10.4 Printing From a VM Client

To print from a VM system to PSF/6000, you must have installed TCP/IP for VM version 2 Release 2 (program product 5735-FAL) or later. In addition the VM `lpr` command has to support the BINARY option in order to print AFP data streams files.

The BINARY option is added via PTFs. If you want to check if your VM system has installed this option, issue the the `HELP LPR` command at a VM command line. If the BINARY option appears in the help text, you have the required PTF installed.

This section describes the tasks you have to perform in order to:

- Configure the RISC System/6000 server

- Configuring the VM client

7.10.4.1 Configuring the RISC System/6000 Server

To configure the RISC System/6000 server for the VM host, perform these tasks:

1. Define the VM hosts to the RISC System/6000 by adding the VM hostname, ausvmr.austin.ibm.com, to the /etc/hosts file.
2. Give the VM host authorization for using the lpd daemon on the RISC System/6000, by adding ausvmr.austin.ibm.com to the /etc/hosts.lpd file
3. Verify that the lpd daemon is running by issuing the following command:

```
# ps -ef | grep lpd
```

7.10.4.2 Configuring the VM Client

To configure the VM client, perform the following tasks:

1. Define the RISC System/6000 to the VM System

   The system administrator has to add the PSF/6000 server hostname (bob4) to the HOSTS LOCAL file on the TCPMAINT minidisk. The system administrator has to run the MAKESITE program in order for the change to take effect. This task updates the HOSTS ADDRINFO and HOSTS SITEINFO files. Finally TCP/IP has to be stopped and restarted again.
2. Add the statement `set ldrtbls 6` in the userid's PROFILE EXEC in order to increase the number of loader tables (if you have ldrtbls with a value smaller than 6).
3. Issue the following commands to link to the TCPMAINT minidisk.

```
====> link tcpmaint 592 592 rr
```

```
====> acc 592 b
```

4. To print a flat file to the printer IBM 3825, issue the following command:

```
====> lpr file1 ASCII a (P q3825 AT bob4
```

5. To print an AFP data stream file, issue the following command:

```
====> lpr file2 AFP a (P q3825 AT bob4 BINARY
```

7.10.5 Printing from a MVS Client

To print from an MVS system to a PSF/6000 server, you must have installed IBM TCP/IP for MVS version 2 release 2 (program product 5735-HAL) or later.

This section describes the task that you have to perform in order to:

- Configure the RISC System/6000 server

- Configure the MVS client

7.10.5.1 Configuring the RISC System/6000 Server

To configure the RISC System/6000 server, perform these tasks:

1. Define the MVS host to the RISC System/6000 by adding the MVS hostname, ausmvs.austin.ibm.com, to the /etc/hosts file.
2. Give the MVS host authorization for using the lpd daemon on the RISC System/6000, by adding ausmvs.austin.ibm.com to the /etc/hosts.lpd file
3. Verify that the lpd daemon is running by issuing the following command:

```
# ps -ef | grep lpd
```

7.10.5.2 Configuring the MVS Client

To configure the MVS client, perform the following tasks:

1. Define the RISC System/6000 to the MVS system:

   The system administrator has to add the PSF/6000 server hostname (bob4) to the TCPIP.V2R2M1.HOSTS.LOCAL data set. The system administrator has to run the MAKESITE program in order for the change to take effect. This task updates the TCPIP.V2R2M1.HOSTS.ADDRINFO and TCPIP.V2R2.M1.HOSTS.SITEINFO data sets. Finally TCP/IP has to be stopped and restarted.

2. To print a flat file to the printer IBM 4039, issue the following command from a TSO prompt:

```
====> lpr 'file1.asc(member1)' (host bob4 printer q3825
```

3. To print an AFP data stream file, issue the following command:

```
====> lpr 'demos.list3820(penn)' (binary host bob4 printer q3825
```

   Note: TCP/IP for MVS supports the BINARY option so that you can submit AFP (LIST3820) data stream files. In addition, you can pass `-o` parameters that PSF/6000 is able to understand.

7.10.6 Printing from an MVS System Using -o Parameters

In this section we describe how to print MVS files passing `-o` parameters to the PSF/6000 queue.

7.10.6.1 Example 1

We are using the `lpr` command to print a 133-byte, fixed-length carriage control MVS data set, named TIP2.OUTPUT, on a queue called q3825 to a PSF/6000 system called bob4, which is associated to an IBM 3825 IPDS printer, using a two-up pagedef of P1W12883, a font of GT15, and a formdef of F1A10110.

Also we specified a datatype of line and fileformat of record 133.

To print this file enter the following command:

```
====>  LPR 'TIP2.OUTPUT' (binary host bob4 printer q3825 -odatatype=line
       -ofileformat=record,133 -occ=yes -occtype=a -opagedef=P1W12883
       -ochars=gt15 -oformdef=F1A10110
```

7.10.6.2 Example 2

In this example, we are sending an AFP (LIST3820) file from MVS to PSF/6000 to print, specifying the type of data and the form definition. Use the following command:

```
====> LPR 'USER.LIST3820' (binary host bob4 printer q3825 -odatatype=afp
      -oformdef=F1A10110
```

Note: The `-o` option values cannot have imbedded blanks.

7.10.7 Printing from an AS/400 Client

To print from an AS/400 system to PSF/6000, you must have installed IBM TCP/IP Utilities/400 Version 2 Release 3 or later.

This section describes the tasks that you have to perform in order to:

- Configure the RISC System/6000 server
- Configure the AS/400 client
- Print an SCS spooled file
- Print an AFPDS spooled file
- Send an AS/400 overlay to the RISC System/6000 server

7.10.7.1 Configuring the RISC System/6000 Server

To configure the RISC System/6000 server, perform the following tasks:

1. Define the AS/400 host to the RISC System/6000 by adding the AS/400 hostname, AS4001.austin.ibm.com, to the /etc/hosts file.
2. Give the AS/400 host authorization for using the lpd daemon on the RISC System/6000, by adding AS400.austin.ibm.com, to the /etc/hosts.lpd file
3. Verify that the lpd daemon is running by issuing the following command:

```
# ps -ef | grep lpd
```

7.10.7.2 Configuring the AS/400 Client

In order to print from the AS/400 to a PSF/6000 printer perform the following:

1. The system administrator has to add the PSF/6000 host (bob4) to the TCP/IP Host Table using the `CFGTCP` command as follows:

```
                        Add TCP/IP Host Table Entry
                                                        System: AS4001
Type choices, press Enter.


 Internet address . . . . . . . 9.3.1.28
 Host name  . . . . . . . . . . . bob4


F3=Exit  F12=Cancel
```

7.10.7.3 Printing an SCS Spooled File

In this case we are showing how to print to the IBM 4039 printer (qaix queue).

In order to print from the AS/400 System, the file has to be already spooled so it can be printed via TCP/IP. The command that you have to use for choosing a spooled file is WRKSPLF (Work with Spooled Files).

Starting from this screen, perform the following tasks:

```
                          Work with All Spooled Files
                                                      System: AS4001
  Type choices, press Enter.
    1=Send  2=Change  3=Hold  4=Delete  5=Display  6=Release  7=Messages
    8=Attributes      9=Work with printing status

                          Device or                   Total  cur
 Opt  File      User      Queue      User Data   Sts   Pages  page  copy
   8  AS400FL   GRICO     prt01      QPADDEV0001 RDY     20            1

                                                                   Bottom
 Parameters for options 1, 2, 3 or command
 ===>

F3=Exit  F10=View 3  F11=View 2  F12=Cancel F22=Printers F24=More Keys
```

1. With option 8 you can display the spooled file attributes:

```
                      Work with Spooled File Attributes

  Job . . . . . . . . :  QPADDEV0001    File . . . . . . . . : AS400FL
    User  . . . . . . :  GRICO            Number . . . . . . : 1
    Number  . . . . . :  140127
```

2. From the command line enter the LPR command. In the displayed panel fill all the required fields as follows:

```
                    Send TCP/IP Spooled File (LPR)

 Type choices, press Enter.

 Remote system . . . . . > bob4

Printer queue  . . . . . > 'qaix'


Spooled file   . . . . . > AS400FL        Name
Job name . . . . . . . . > QPADDEV0001    Name, *
  User . . . . . . . . . >   GRICO        NAME
  Number . . . . . . . . >   140127       000000-99999
Spooled file number  . . . . . > 1
Destination type . . . . . .   *OTHER      *AS400, *PSF2, *OTHER
Transform Scs to ASCII . . . .   *YES      *YES, *NO

F3=Exit  F4=Prompt  F5=Refresh  F10=Additional parameters  F12=Cancel
F13=How to use this display     F24=More keys
```

Notes:

1. Its possible that when you print with LPR you get the following error message:

   ```
   lpd: (FATAL ERROR): 0781-212 protocol error.
   ```

   This error is caused because the LPR/LPD support on the AS/400 and in AIX are slightly different levels of RFC 1179. Regardless of this error message you should be able to print without any problem.

2. Since AIX is case-sensitive you have to use single quotes in the LPR command, when the name of the PSF/6000 queue is in lower case.

3. For the SCS data stream, you must specify *YES for the Transform SCS using the Host Print Transform.

7.10.8 Printing from a OS/2 2.11 Client

In order to print from an OS/2 system to PSF/6000, you must have installed TCP/IP for OS/2 version 1.2.1 (program product 02G6968) or later. In the following example we use TCP/IP version 2.0 (program product 65G1220).

This section includes the tasks you have to perform to:

1. Configure the RISC System/6000 server
2. Configure the OS/2 2.11 client

7.10.8.1 Configuring the RISC System/6000 Server

To configure the RISC System/6000 server, perform the following tasks:

1. Define the OS/2 System to the RISC System/6000 by adding the OS/2 System hostname, OS2AUS.austin.ibm.com, to the /etc/hosts file.
2. Give the OS/2 host authorization for using the lpd daemon on the RISC System/6000, by adding OS2AUS.austin.ibm.com to the /etc/hosts.lpd file
3. Verify that the lpd daemon is running by issuing the following command:

   ```
   # ps -ef | grep lpd
   ```

7.10.8.2 Configuring the OS/2 Client

In order to configure the OS/2 client follow these steps:

1. Open the TCP/IP object from the OS/2 desktop
2. Double-click on the TCP/IP Configuration icon
3. In the Configure Network Interface Parameters panel, select `LAN Adapter 0` Fill the IP Address and Subnet Mask fields as follows:
   a. `IP Address = 9.3.1.32`
   b. `Subnet Mask = 255.255.255.0`
   c. Accept the defaults for the other fields
4. Select Services

   The Configure Services (FTP, DOMAIN NAME SERVICES) is displayed:
5. Click on the lower right-hand corner arrow to go to panel 2 of services
6. The Configure Services (PINGHOST, LPR, REXEC) panel is displayed.
7. Now you have to define a remote printer. For doing so, fill the required fields as follows:
   a. Remote Print Server:`9.3.1.28`
   b. Remote Print Server's Printer:`q3825`

      Note: In this case we are defining the IBM 3825 printer queue as the default remote queue for the OS/2 System.
   c. Maximum number of LPD Ports:`8`
8. In order to print to this queue, you can enter the following command:

```
c:\> lpr config.sys
```

9. To print an AFP data stream file you have to use the binary flag:

```
c:\> lpr -b DEMOS.afp
```

10. If you want to print to the AIX defined printer, you can override the defaults by specifying the printer and hostname on the `lpr` command:

```
c:\> lpr -pqaix -s9.3.1.28 config.sys
```

7.11 PSF/6000 PSF Direct Component

The PSF Direct component of Print Services Facility/6000 (PSF/6000) allows PSF/MVS, PSF/VSE, PSF/VM, or PSF/400 to remotely control any printer accessible to PSF/6000.

PSF/6000 is licensed software for the IBM RISC System/6000 family which allows files on an AIX spool to be printed on IBM and non-IBM printers that accept the following data streams:

- IBM Intelligent Printer Data Stream (IPDS)
- Personal Printer Data Stream (PPDS)
- Hewlett-Packard Printer Control Language (PCL4, PCL5, and PCL5C)

PSF Direct receives IPDS data from PSF/MVS, PSF/VSE, PSF/VM, or PSF/400 using an SNA communication network. PSF Direct transparently forwards the data to a printer accessible to PSF/6000.

Since PSF Direct forwards print data transparently, printers managed by PSF Direct appear to PSF/MVS, PSF/VSE, PSF/VM or PSF/400 to be simply SNA LU 6.2-attached IPDS printers.

PSF Direct does not spool data. It simply acts as a transparent intermediary between PSF/MVS, PSF/VSE, PSF/MVS, or PSF/400 and a printer.

The operator at the MVS, VSE, VM, or OS/400 system has, in most cases, the same ability to stop, start, forward space, and backward space as would be available for printers attached to the system without using PSF Direct. There are some restrictions for non-IPDS printers.

PSF Direct behaves like RPM (Remote Print Manager) 2.0. However, PSF Direct does support printer resident resources such as resident fonts.

PSF Direct supports many printers instead of one printer (RPM 2.0). The only problem that would exist is by performance considerations such as the capacity of the RISC System/6000, the speed of the printers, and complexity of the print applications.

Appendix A. AIX Print Commands

A.1 Printer Configuration Files, Commands and Processes

The AIX V4.1 print spooling subsystem is made up of a large number of configuration files, commands, programs and processes. Table 8 on page 198 summarizes key files and programs that make up the AIX V4.1 print spooling subsystem. Table 9 on page 198 summarizes various printing related commands available under AIX V4.1.

AIX V4.1 supports AT&T System V** and BSD print command behaviors as well as unique AIX V4.1 printing facilities. This document is focused primarily on the the AIX V4.1 printing facilities as they provide the greatest function and facility in the AIX V4.1 environment.

As there are no differences between AIX V4.1 and AIX V3.1 print command sets, except for the inclusion of the `qhld` and `qmov` commands, the compatibility between AIX V4.1, AIX V2, BSD and AT&T print command sets will be discussed in A.2, “Compatibility of the AIX V4.1 Print Spooling Subsystem” on page 200.

© Copyright IBM Corp. 1991, 1994

Table 8. Key AIX V4.1 Print Spooling Subsystem Configuration Files and Programs

File	Contents
/dev/lp*	Printer device driver file. Contains information on the printers communications interface, and some minimal printer control capability.
/etc/hosts.equiv	Contains the names of remote hosts allowed to execute commands and print on this host.
/etc/hosts.lpd	Specifies foreign hosts that can print on the local host.
/etc/inittab	The system startup configuration file. This file can be used to contain printer configuration entries.
/etc/locks/lpd	Contains the PID of the currently running lpd daemon.
/etc/qdaemon	Queueing daemon.
/etc/qconfig	Queue configuration file. An ASCII file that contains the printer queue configuration information and the queue device configuration.
/etc/qconfig.bin	Digested, binary version of the /etc/qconfig file that is used by programs such as enq and qdaemon.
/usr/lib/lpd/digest	Program that converts the qconfig file to its binary form (qconfig.bin).
/usr/lib/lpd/qdir/*	Job description files for print jobs (queue requests). Each job enqueued to the print spooling subsystem has an entry in this directory.
/usr/lib/lpd/rembak	Remote printing backend program. Sends print file to another host for printing.
/usr/lib/lpd/stat/*	Information on the status of the printer queues and devices.
/var/spool/qdaemon/*	Temporary copies of enqueued files are spooled to this directory.
/var/spool/lpd	Contains the spool directory for control, status, and data files.
/var/spool/lpd/pio/@local/ddi	Contains the digested virtual printer definitions for each configured virtual printer.
/var/spool/lpd/pio/@local/custom	Contains the customized virtual printer parameters.
/usr/lib/lpd/pio/predef	Contains the predefined virtual printer parameters for supported types of virtual printers.

Table 9 (Page 1 of 4). Commands Used in Printing

Command	Explanation	Heritage
cancel	Cancels requests to a line printer	System V
chque	Changes the queue stanza in /etc/qconfig	AIX V3
chquedev	Changes the printer/plotter queue device stanza in /etc/qconfig	AIX V3
chvirprt	Changes the virtual printer definitions in the /var/spool/lpd/pio/@local/custom and /var/spool/lpd/pio/@local/ddi directories	AIX V3

Table 9 (Page 2 of 4). Commands Used in Printing

Command	Explanation	Heritage
disable	Disables or brings a given printer off line	System V
enable	Enables a printer queue	System V
enq	Queues a file for printing, cancels and prioritizes print requests, brings printers and queues up and down, allows print time flags to be added to override preset options	AIX V3
lp	Sends requests to a line printer	System V
lpd	Provides the remote print server on a network	BSD
lpq	Examines the spool queue	BSD
lpr	Queues a print job	BSD
lprm	Removes jobs from the line printer spooling queue	BSD
lpstat	Displays line printer status information	System V
lptest	Generates the line printer ripple pattern	
lsallq	Lists the names of all configured queues	AIX V3
lsallqdev	Lists all configured printer/plotter queue device names for a given queue	AIX V3
lsque	Displays the queue stanza information for the given queue	AIX V3
lsquedev	Displays the queue device stanza information for the given queue and device	AIX V3
lssrc	Lists the status of subsystems and processes managed by the Systems Resource Controller. lssrc -g spooler lists the status of process in the spooler group.	AIX V3
lsvirprt	Lists the attributes of a virtual printer	AIX V3
mkque	Adds a printer queue to the system	AIX V3
mkvirprt	Adds a virtual printer to the system	AIX V3
mkquedev	Adds a printer queue device to the system	AIX V3
piobe	Print job manager for the printer backend	AIX V2
qadm	Performs administration functions for the printer spooling system	AIX V3
qchk	Displays the status of a print queue	AIX V3
qcan	Cancels a print job	AIX V3
qdaemon	Schedules jobs enqueued by the **enq** command	AIX V2
qhld	Holds and releases a spooled print job	AIX V4.1
qmov	Moves spooled print jobs to another queue	AIX V4.1
qpri	Prioritizes a job in the print queue	AIX V3
qprt	Starts a queued print job	AIX V3
qstatus	Provides printer status for the print spooling system	AIX V3
rembak	Sends a print job to a queue on a remote server	AIX V3
rmque	Removes a printer queue from the system	AIX V3
rmquedev	Removes a printer queue device from the system	AIX V3

Table 9 (Page 3 of 4). Commands Used in Printing

Command	Explanation	Heritage
ruser	Directly manipulates entries in system databases that control foreign host access to programs	BSD
splp	Changes or displays printer driver settings	AIX V2
startsrc	Starts processes and process groups managed by the SRC such as the spooler group or the qdaemon or lpd processes	AIX V3
stopsrc	Stops processes and process groups managed by the SRC such as the spooler group or the qdaemon or lpd processes	AIX V3

A.2 Compatibility of the AIX V4.1 Print Spooling Subsystem

Part of the fundamental design philosophy of AIX V4.1 was to ensure that the facilities it offered complied with standards such as the IEEE's POSIX and X/OPEN's XPG. AIX V4.1 is also designed to be compatible with the major UNIX implementations available in the marketplace today. To that end, AIX V4.1 includes many facilities that form a part of the BSD or AT&T's System V environments. This section overviews the compatibility offered by AIX V4.1.

Table 10. AIX V4.1 Print Spooling Subsystem Compatibility with System V

Command	Supported in AIX V4.1	Description	AIX V4.1 equivalent
accept	no	Allows print requests	qadm -U, chque
lpadmin	no	Configures print spooling subsystem	smit lprint
lpsched	no	The scheduling daemon, starts the scheduling daemon	qdaemon, startsrc -s qdaemon
lpshut	no	Shut down the print spooling subsystem	stopsrc -s qdaemon
lpmove	no	Moves print request between print queues	qmov
reject	no	Prevent print requests	qadm -D, chque
cancel	yes	Cancel a print request	qcan
enable	yes	Enables a printer	qadm -U
disable	yes	Disables a printer	qadm -D
lp	yes	Queues jobs for printing	qprt
lpstat	yes	Queries print spooling subsystem status	qchk -A

Table 11. AIX V4.1 Print Spooling Subsystem Compatibility with BSD

Command	Supported in AIX V4.1	Description	AIX V4.1 equivalent
lpc	no	Print Spooling Subsystem administration	smit lprint
lpd	yes*	Line printer daemon	qdaemon
pac	yes	Printer accounting information	pac
lpr	yes	Issues print job requests	qprt
lpq	yes	Display print queue status	qchk
lprm	yes	Remove a job from a print queue	qcan

Note: * - lpd is part of the TCP suite of programs

Table 12. AIX V4.1 Print Spooling Subsystem Compatibility with AIX V2

Command	Supported in AIX V4.1	Description	AIX V4.1 equivalent
splp	yes	Display or configure printer device driver parameters	splp
qdaemon	yes	Daemon that manages print queues and directs print request to printers	qdaemon
print	no	Print files, manage queues and devices	enq, qadm, qchk, qcan, qpri
piobe	yes	Standard backend program for printing to a local printer	piobe
lprbe	no	Backend program for printing on a remote host	rembak
lpd	yes	Daemon that serves print requests from remote systems	lpd

Appendix B. Supported AIX V4.1 Printers

Table 13 (Page 1 of 6). Supported Printers and Plotters (AIX V4.1)

Printer Name/Emulation	Connection Type	Printer Description
bull1015	parallel	Bull Compuprint PageMaster 1015
bull1015	rs232	Bull Compuprint PageMaster 1015
bull1015	rs422	Bull Compuprint PageMaster 1015
bull1021	parallel	Bull Compuprint PageMaster 1021
bull1021	rs232	Bull Compuprint PageMaster 1021
bull1021	rs422	Bull Compuprint PageMaster 1021
bull1025	parallel	Bull Compuprint PageMaster 1025
bull1025	rs232	Bull Compuprint PageMaster 1025
bull1025	rs422	Bull Compuprint PageMaster 1025
bull1070	parallel	Bull Compuprint 1070
bull1070	rs232	Bull Compuprint 1070
bull1070	rs422	Bull Compuprint 1070
bull1625	parallel	Bull Compuprint PageMaster 1625
bull1625	rs232	Bull Compuprint PageMaster 1625
bull1625	rs422	Bull Compuprint PageMaster 1625
bull200	parallel	Bull Compuprint PageMaster 200
bull201	parallel	Bull Compuprint PageMaster 201
bull201	rs232	Bull Compuprint PageMaster 201
bull411	parallel	Bull Compuprint PageMaster 411
bull411	rs232	Bull Compuprint PageMaster 411
bull411	rs422	Bull Compuprint PageMaster 411
bull413	parallel	Bull Compuprint PageMaster 413
bull413	rs232	Bull Compuprint PageMaster 413
bull413	rs422	Bull Compuprint PageMaster 413
bull422	parallel	Bull Compuprint PageMaster 422
bull422	rs232	Bull Compuprint PageMaster 422
bull422	rs422	Bull Compuprint PageMaster 422
bull451	parallel	Bull Compuprint 4/51
bull451	rs232	Bull Compuprint 4/51
bull451	rs422	Bull Compuprint 4/51
bull454	parallel	Bull Compuprint 4/54
bull454	rs232	Bull Compuprint 4/54
bull454	rs422	Bull Compuprint 4/54
bull721	parallel	Bull Compuprint PageMaster 721
bull721	rs232	Bull Compuprint PageMaster 721

© Copyright IBM Corp. 1991, 1994

Table 13 (Page 2 of 6). Supported Printers and Plotters (AIX V4.1)

Printer Name/Emulation	Connection Type	Printer Description
bull721	rs422	Bull Compuprint PageMaster 721
bull815	parallel	Bull Compuprint PageMaster 815
bull815	rs232	Bull Compuprint PageMaster 815
bull815	rs422	Bull Compuprint PageMaster 815
bull825	parallel	Bull Compuprint PageMaster 825
bull825	rs232	Bull Compuprint PageMaster 825
bull825	rs422	Bull Compuprint PageMaster 825
bull9142	parallel	Bull Compuprint 914
bull9142	rs232	Bull Compuprint 914
bull9148	parallel	Bull Compuprint 914 N
bull9148	rs232	Bull Compuprint 914 N
bull922	parallel	Bull Compuprint 922
bull922	rs232	Bull Compuprint 922
bull922	rs422	Bull Compuprint 922
bull923	parallel	Bull Compuprint 923
bull923	rs232	Bull Compuprint 923
bull923	rs422	Bull Compuprint 923
bull924	parallel	Bull Compuprint 924
bull924	rs232	Bull Compuprint 924
bull924	rs422	Bull Compuprint 924
bull924N	parallel	Bull Compuprint 924 N
bull924N	rs232	Bull Compuprint 924 N
bull924N	rs422	Bull Compuprint 924 N
bull956	parallel	Bull Compuprint 956
bull956	rs232	Bull Compuprint 956
bull956	rs422	Bull Compuprint 956
bull970	parallel	Bull Compuprint 970
bull970	rs232	Bull Compuprint 970
bull970	rs422	Bull Compuprint 970
bullpr88	parallel	Bull PR-88
bullpr88	rs232	Bull PR-88
bullpr88-vfu	parallel	Bull PR-88 VFU Handling
bullpr88-vfu	rs232	Bull PR-88 VFU Handling
bullpr90	parallel	Bull PR-90
bullpr90	rs232	N/A
canlbp	parallel	Canon Laser Shot LBP-B406/S/D,A404
canlbp-A404PS	parallel	Canon LASER SHOT LBP-A404PS/Lite
canlbp-A404PS	rs232	Canon LASER SHOT LBP-A404PS/Lite

Table 13 (Page 3 of 6). Supported Printers and Plotters (AIX V4.1)

Printer Name/Emulation	Connection Type	Printer Description
canlbp-B406G	parallel	Canon LASER SHOT LBP-B406G
canlbp-B406G	rs232	Canon LASER SHOT LBP-B406G
dp2000	parallel	Dataproducts BP2000 Line Printer
dp2665	parallel	Dataproducts LZR 2665 Laser Printer
dp2665	rs232	Dataproducts LZR 2665 Laser Printer
dp2665	rs422	Dataproducts LZR 2665 Laser Printer
hplj-2	parallel	Hewlett-Packard LaserJet II
hplj-2	rs232	Hewlett-Packard LaserJet II
hplj-2	rs422	Hewlett-Packard LaserJet II
hplj-3	parallel	Hewlett-Packard LaserJet III
hplj-3	rs232	Hewlett-Packard LaserJet III
hplj-3	rs422	Hewlett-Packard LaserJet III
hplj-3si	parallel	Hewlett-Packard LaserJet IIISi
hplj-3si	rs232	Hewlett-Packard LaserJet IIISi
hplj-3si	rs422	Hewlett-Packard LaserJet IIISi
hplj-4	parallel	Hewlett-Packard LaserJet 4,4M
hplj-4	rs232	Hewlett-Packard LaserJet 4,4M
hplj-4	rs422	Hewlett-Packard LaserJet 4,4M
ibm2380	parallel	IBM 2380 Personal Printer II
ibm2380	rs232	IBM 2380 Personal Printer II
ibm2380	rs422	IBM 2380 Personal Printer II
ibm2380-2	parallel	IBM 2380 Plus printer (Model 2)
ibm2380-2	rs232	IBM 2380 Plus printer (Model 2)
ibm2380-2	rs422	IBM 2380 Plus printer (Model 2)
ibm2381	parallel	IBM 2381 Personal Printer II
ibm2381	rs232	IBM 2381 Personal Printer II
ibm2381	rs422	IBM 2381 Personal Printer II
ibm2381-2	parallel	IBM 2381 Plus printer (Model 2)
ibm2381-2	rs232	IBM 2381 Plus printer (Model 2)
ibm2381-2	rs422	IBM 2381 Plus printer (Model 2)
ibm2390	parallel	IBM 2390 Personal Printer II
ibm2390	rs232	IBM 2390 Personal Printer II
ibm2390	rs422	IBM 2390 Personal Printer II
ibm2390-2	parallel	IBM 2390 Plus printer (Model 2)
ibm2390-2	rs232	IBM 2390 Plus printer (Model 2)
ibm2390	rs422	IBM 2390 Personal Printer II
ibm2390-2	parallel	IBM 2390 Plus printer (Model 2)
ibm2390-2	rs232	IBM 2390 Plus printer (Model 2)

Table 13 (Page 4 of 6). Supported Printers and Plotters (AIX V4.1)

Printer Name/Emulation	Connection Type	Printer Description
ibm2390-2	rs422	IBM 2390 Plus printer (Model 2)
ibm2391	parallel	IBM 2391 Personal Printer II
ibm2391	rs232	IBM 2391 Personal Printer II
ibm2391	rs422	IBM 2391 Personal Printer II
ibm2391-2	parallel	IBM 2391 Plus printer (Model 2)
ibm2391-2	rs232	IBM 2391 Plus printer (Model 2)
ibm2391-2	rs422	IBM 2391 Plus printer (Model 2)
ibm3812-2	rs232	IBM 3812 Model 2 Page Printer
ibm3812-2	rs422	IBM 3812 Model 2 Page Printer
ibm3816	rs232	IBM 3816 Page Printer
ibm3816	rs422	IBM 3816 Page Printer
ibm4019	parallel	IBM 4019 LaserPrinter
ibm4019	rs232	IBM 4019 LaserPrinter
ibm4029	parallel	IBM 4029 LaserPrinter
ibm4029	rs232	IBM 4029 LaserPrinter
ibm4037	parallel	IBM 4037 LP printer
ibm4037	rs232	IBM 4037 LP printer
ibm4037	rs422	IBM 4037 LP printer
ibm4039	parallel	IBM 4039 LaserPrinter
ibm4039	rs232	IBM 4039 LaserPrinter
ibm4039	rs422	IBM 4039 LaserPrinter
ibm4070	parallel	IBM 4070 IJ printer
ibm4072	parallel	IBM 4072 ExecJet
ibm4072	rs232	IBM 4072 ExecJet
ibm4072	rs422	IBM 4072 ExecJet
ibm4076	parallel	IBM 4076 IJ printer
ibm4076	rs232	IBM 4076 IJ printer
ibm4076	rs422	IBM 4076 IJ printer
ibm4079	parallel	IBM 4079 Color Jetprinter PS
ibm4079	rs232	IBM 4079 Color Jetprinter PS
ibm4201-2	parallel	IBM 4201 Model 2 Proprinter II
ibm4201-2	rs232	IBM 4201 Model 2 Proprinter II
ibm4201-3	parallel	IBM 4201 Model 3 Proprinter III
ibm4201-3	rs232	IBM 4201 Model 3 Proprinter III
ibm4201-3	rs422	IBM 4201 Model 3 Proprinter III
ibm4202-2	parallel	IBM 4202 Model 2 Proprinter II XL
ibm4202-2	rs232	IBM 4202 Model 2 Proprinter II XL
ibm4202-3	parallel	IBM 4202 Model 3 Proprinter III XL

Table 13 (Page 5 of 6). Supported Printers and Plotters (AIX V4.1)

Printer Name/Emulation	Connection Type	Printer Description
ibm4202-3	rs232	IBM 4202 Model 3 Proprinter III XL
ibm4202-3	rs422	IBM 4202 Model 3 Proprinter III XL
ibm4207-2	parallel	IBM 4207 Model 2 Proprinter X24E
ibm4207-2	rs232	IBM 4207 Model 2 Proprinter X24E
ibm4207-2	rs422	IBM 4207 Model 2 Proprinter X24E
ibm4208-2	parallel	IBM 4208 Model 2 Proprinter XL24E
ibm4208-2	rs232	IBM 4208 Model 2 Proprinter XL24E
ibm4208-2	rs422	IBM 4208 Model 2 Proprinter XL24E
ibm4208-502	parallel	IBM 4208 Model 502 Proprinter XL24EK
ibm4212	parallel	IBM 4212 Proprinter 24P
ibm4216-31	parallel	IBM 4216 Personal Page Printer, Model 031
ibm4216-31	rs232	IBM 4216 Personal Page Printer, Model 031
ibm4216-31	rs422	IBM 4216 Personal Page Printer, Model 031
ibm4216-510	parallel	IBM 4216 Model 510
ibm4224	rs232	IBM 4224 Printer, Models 301,302,3C2,3E3
ibm4224	rs422	IBM 4224 Printer, Models 301,302,3C2,3E3
ibm4226	parallel	IBM 4226 Printer
ibm4226	rs232	IBM 4226 Printer
ibm4226	rs422	IBM 4226 Printer
ibm4234	parallel	IBM 4234 Dot Band Printer Model 013
ibm4234	rs232	IBM 4234 Dot Band Printer, Model 013
ibm4234	rs422	IBM 4234 Dot Band Printer, Model 013
ibm5202	parallel	IBM 5202 Quietwriter III
ibm5204	parallel	IBM 5204 Quickwriter
ibm5204	rs232	IBM 5204 Quickwriter
ibm5327	parallel	IBM 5327 Model 011
ibm5572	parallel	IBM 5572 Model B02
ibm5573	parallel	IBM 5573 Model H02
ibm5575	parallel	IBM 5575 Model B02/F02
ibm5577	parallel	IBM 5577 Model B02/F02/H02/G02/FU2/J02/K02
ibm5579	parallel	IBM 5579 Model H02/K02
ibm5584	parallel	IBM 5584 Model G02/H02
ibm5585	parallel	IBM 5585 Model H01
ibm5587	parallel	IBM 5587 Model G01
ibm5587H	parallel	IBM 5587 Model H01
ibm5589	parallel	IBM 5589 Model H01
ibm6180	rs232	IBM 6180 Color Plotter
ibm6182	rs232	IBM 6182 Auto Feed Color Plotter

Table 13 (Page 6 of 6). Supported Printers and Plotters (AIX V4.1)

Printer Name/Emulation	Connection Type	Printer Description
ibm6184	rs232	IBM 6184 Color Plotter
ibm6185-1	rs232	IBM 6185-1 Color Plotter
ibm6185-2	rs232	IBM 6185-2 Color Plotter
ibm6186	rs232	IBM 6186 Color Plotter
ibm6252	parallel	IBM 6252 Impactwriter
ibm6252	rs232	IBM 6252 Impactwriter
ibm6252	rs422	IBM 6252 Impactwriter
ibm6262	parallel	IBM 6262 Printer
ibm6262	rs232	IBM 6262 Printer
ibm6262	rs422	IBM 6262 Printer
ibm7372	rs232	IBM 7372 Color Plotter
oki801ps	rs232	OKI MICROLINE 801PS/IBMF,801PSII/IBMF,800PSIILT
opp	parallel	Other parallel printer
osp	rs232	Other serial printer
osp	rs422	Other serial printer
p9012	parallel	Printronix P9012 Line Printer
p9012	rs232	Printronix P9012 Line Printer
qms100	parallel	QMS ColorScript 100, Model 20
qms100	rs232	QMS ColorScript 100, Model 20
qms100	rs422	QMS ColorScript 100, Model 20
ti2115	parallel	Texas Instruments OmniLaser 2115 Page Printer
ti2115	rs232	Texas Instruments OmniLaser 2115 Page Printer
ti2115	rs422	Texas Instruments OmniLaser 2115 Page Printer
4202-3, 4202-3, ibm4224	parallel	IBM 4230 Printer Models 4xx and 5xx
4202-3, 4202-3, ibm4224	rs232	IBM 4230 Printer Models 4xx and 5xx
4202-3, 4202-3, ibm4224	parallel	IBM 4232 Printer
4202-3, 4202-3, ibm4224	rs232	IBM 4232 Printer
4202-3, 4202-3, ibm4224	parallel	IBM 4232 Printer
4202-3, 4202-3, ibm4224	rs422	IBM 4232 Printer
4202-3	Parallel	IBM 6408 Printer Models A00 and CTA
4202-3	rs232	IBM 6408 Printer Models A00 and CTA
4202-3	parallel	IBM 6412 Printer Models A00 and CTA
4202-3	rs232	IBM 6412 Printer Models A00 and CTA

Table 14. PSF/6000 Printers Information

Printer	Resolution	Attachment	Required Adapter	PSF/6000 Data Stream Accepted
IBM 3812 Printer Model 2	240-pel (Picture Elements)	TCP/IP	i-data	IPDS
IBM 3816	240-pel	TCP/IP	i-data	IPDS
IBM 3825	240-pel	Channel	S/370	IPDS
IBM 3827	240-pel	Channel	S/370	IPDS
IBM 3828	240-pel	Channel	S/370	IPDS
IBM 3829	240-pel	Channel	S/370	IPDS
IBM 3835	240-pel	Channel	S/370	IPDS
IBM 3900 Advanced Function Printer	240-pel	Channel	S/370	IPDS
IBM 3900 Advanced Function Duplex Printer	240-pel	Channel, TCP/IP	S/370	IPDS
IBM 3900 Wide AFP Printer	240-pel	Channel, TCP/IP	S/370, Token-Ring, Ethernet	IPDS
IBM 3912 Page Printer Models AS0 and NS0	300-pel	AIX-defined	no adapter	PCL5
IBM 3912 Page Printer Models AS1 and NS1	300-pel	AIX-defined, TCP/IP	no adapter, i-data	PCL5, IPDS
IBM 3916 Page printer Models AS0 and NS0	300-pel	AIX-defined	no adapter	PCL5
IBM 3916 Page Printer Models AS1 and NS1	300-pel	AIX-defined, TCP/IP	no adapter, i-data	PCL5, IPDS
IBM 3930 Page Printer Models 02S and 02D	240-pel	TCP/IP	i-data	IPDS
IBM 3930 Page Printer Models 03S and 03D	300-pel	AIX-defined	no adapter	PCL5
IBM 3935 Page Printer	300-pel	TCP/IP	Token-Ring, Ethernet	IPDS
IBM LaserPrinter 4028 and 4028 MICR	300-pel	TCP/IP	i-data	IPDS

Appendix C. SMIT Fastpaths for Printing

Spooler (Print Jobs and Printers) **spooler, print, queue, lq, rq, lqdev, rqdev**
Start a Print Job **qprt, enq, qstart**
Manage Print Jobs **jobs**
- Cancel a Print Job **qcan**
- Show the Status of Print Jobs **qchk**
- Prioritize a Print Job **qpri**
- Hold / Release a Print Job **qhld**
- Move a Job Between Print Queues **qmov**

List All Print Queues **lspq**
Manage Print Queues **pqmanage**
- Show Status of Print Queues **qstatus**
- Stop a Print Queue **qstop**
- Start a Print Queue **qstart**
- Set the System's Default Print Queue **qdefault**

Add a Print Queue **mkpq, mkvirprt**
Add an Additional Printer to an Existing Print Queue **mkpqprt**
Change / Show Print Queue Characteristics **chpq**
Change / Show Printer Connection Characteristics **chprtcom**
Remove a Print Queue **rmpq**
Manage Print Server **server, host, lpd**
- List all Remote Clients with Print Access **lshostslpd**
- Add Print Access for a Remote Client **mkhostslpd**
- Remove Print Access for a Remote Client **rmhostslpd**
- Start the Print Server Subsystem (lpd daemon) **mkitab, mkitab_lpd**
- Stop the Print Server Subsystem **rmitab_lpd**
- Show Status of the Print Server Subsystem **statlpd**

Programming Tools **pqtools**
- Change / Show Printer Attribute Database (Virtual Printers) **lsvirprt, chvirprt**
- Change / Show Pre-processing Filters **pqfilters**
- Local Print Devices **pdp**
  - List All Defined Printers/Plotters **lsdprt**
  - List All Supported Printers/Plotters **lssprt**
  - Add a Printer/Plotter **makprt**
  - Move a Printer/Plotter to Another Port **movprt**
  - Change / Show Characteristics of a Printer/Plotter **chgprt**
  - Remove a Printer/Plotter **rmvprt**
  - Configure a Defined Printer/Plotter **cfgprt**
  - Install Additional Printer/Plotter Software **printerinst**
  - Generate an Error Report **errpt**
  - Trace a Printer/Plotter **trace**
    - Start Trace **trcstart**
    - Stop Trace **trcstop**
    - Generate a Trace Report **trcrpt**
- Queues and Queue Devices **pq_lprint**
  - Queues **pq_lq**
    - List All Queues **pq_lsallq**
    - Add a Queue **pq_mklque**
    - Change / Show Characteristics of a Queue **pq_chque**
    - Remove a Queue **pq_rmque**
  - Queue Devices **pq_lqdev**
    - List All Queue Devices **pq_lsallqdev**
    - Add a Queue Device to an Existing Queue **pq_mkquedev**
    - Change / Show Characteristics of a Queue Device **pq_chquedev**
    - Remove a Queue Device **pq_rmquedev**

© Copyright IBM Corp. 1991, 1994

Appendix D. RISC System/6000 Printer Cabling

The RISC System/6000 supports IBM 8, 16, and 128 port adapters. It also has two serial ports as standard on the planar board. The following appendix is intended to explain the physical connections required, the IBM cables that are supplied in order to achieve these requirements, and also how these cables are constructed.

This will enable the cables to be made to non-standard lengths as required.

D.1 IBM Adapters and Cables

There are a number of cable options available. It is important that the proper configuration is understood. The following diagrams explain which cables connect to which adaptors:

D.1.1 Native Serial Ports (S1 and S2)

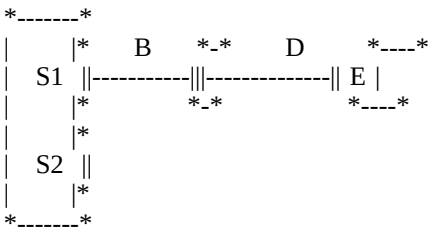

The S1 and S2 ports are 10 pin modu connectors. However, with each model the cable (B) is provided. This cable provides a 10 pin modu to 25 pin D type male connector. As it is provided there is no value in describing the pinouts. If customer supplied cabling is to be provided, then this will be for the section (D) plus (E) as shown above.

The cable (D) is a 25 pin to 25 pin straight through cable which is used for connecting both terminals and printers to the serial ports. It is used in conjunction with the terminal/printer interposer (E).

D.1.2 IBM 8-Port Async Adapters

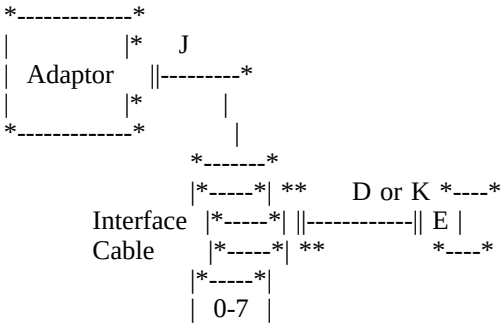

© Copyright IBM Corp. 1991, 1994

This diagram represents the IBM 8-Port Async Adapter EIA-232 (Type 3-1 #2930), the IBM 8-Port Async Adapter EIA-422A (Type 3-2 #2940) and the Interface Cable Assembly (FC 2995). The Interface Cable (J) is supplied as part of the Interface Cable Assembly and therefore need not be specified with orders.

The Cable Assembly ports are labelled 0-7 and attachment cables D for EIA-232 and K for EIA-422 can be connected to any of the 8 ports. Full modem controls are supported by this adapter.

D.1.3 IBM 16-Port Async Adapters

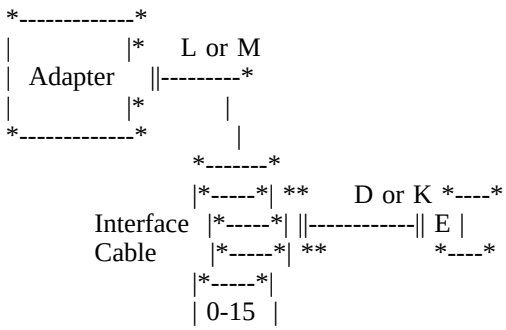

This diagram represents the IBM EIA-232 16-Port async adapter (FC 2995), the16-port Async adapter (FC 2997) and the Interface Cable Assembly (FC 2996). The Interface Cables L and M are supplied as part of the Interface Cable Assembly and therefore need not be specified with orders.

The Cable Assembly ports are labelled 0-15 and attachment cables D for EIA-232 and K for EIA-422 can be connected to any of the 8 ports. The following interface signals are supported: TXD, RXD, DCD and DTR.

D.1.4 IBM 128-Port Async Subsytem

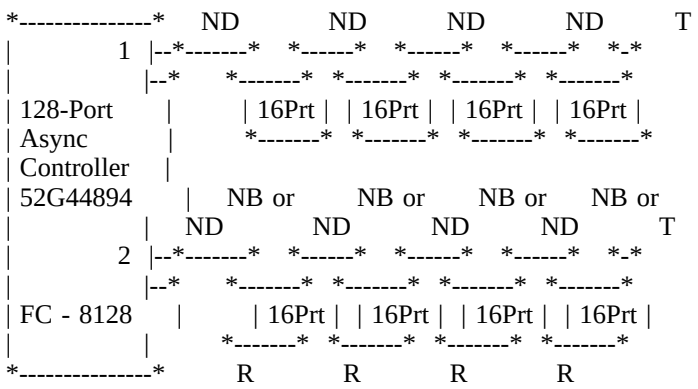

T = Terminator
16Prt = 16-Port Async adpaters
R = Remote 16-port Async adpaters

The 128-port asynchronous adapter subsystem (FC 8128) fulfil the multiuser requierements for workstations in the open system environment. It provides support for attaching a maximum of 128 EIA-232D asyncronous serial devices, such as terminals, modems, and printers. It is an intelligent adapter with the ability to offload processing from the operating system.

128-port product consists of an adapter card, up to eight remote async node (RAN) units, each supporting 16 devices, for total of 128 devices per adapter. The adapter can be connected to the RS/6000 via EIA-232 or EIA-422 cables or modems. The number of 128 async adapters the can be installed is dependent on the number of microchannel slots available in the system with a hardware limit of seven adapters per bus.

Remote Async Node 16-Port EIA-232 or EIA-422

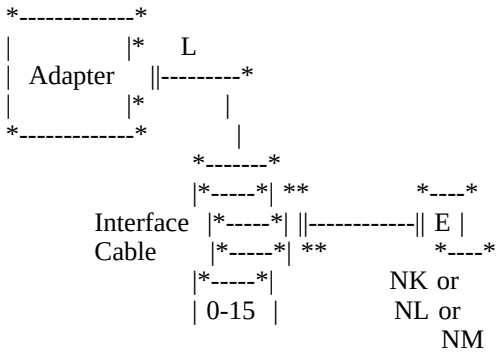

D.2 Cable Pinout Diagrams

These cable diagrams are provided for cabling engineers as reference when making cables for the RISC System/6000. Where available from IBM, the relevant ordering information is supplied.

D.2.1 Cable (D) - EIA-232D Asynchronous Cable

Feature Code 2936
Maximum Length (Customer Supplied) 60 m (200 ft)

System End 25 Pin D Female	Device End 25 Pin D Male
Ground Shield 1	-- Shield
TD 2	-- 2
RD 3	-- 3
RTS 4	-- 4
CTS 5	-- 5
DSR 6	-- 6
Signal Ground 7	-- 7
CD 8	-- 8
DTR 20	-- 20
RI 22	-- 22

D.2.2 Cable (K) - EIA-422A Asynchronous Cable

Feature Code 2995
Maximum Length (Customer Supplied) 1220 m (4000 ft)

Signal Name	System	Device
TxA or +TD	2	15
RxA or +RD	3	19
TxB or -RD	4	17
RxB or -RD	5	25
Sgnl grnd	7	7

D.2.3 Cable (E) - Printer/Terminal Interposer EIA-232

The Printer/Terminal Interposer is attached to the previous cable to provide the correct pinouts for the printer or terminal at the device end. The reason that it is the same for both printers and terminals is that the pinouts at the adapter end are assigned differently for each type of device by software. This means that there is no need for two different types of serial cable.

Feature Code 2937
Length N/A (comes in the form of a gender changer)

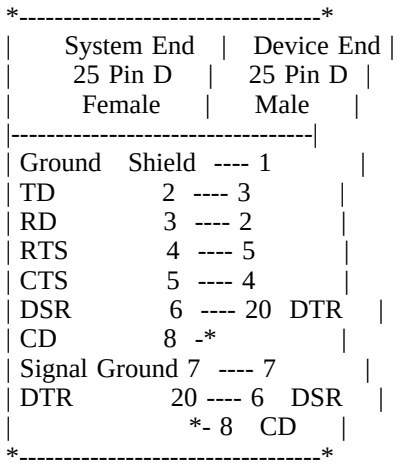

D.2.4 Cable (N) - 64-Port Adapter to 16-port Concentrator

One of these cables is supplied with each concentrator at a standard length. Since it is supported to a longer length the pinout's maximum supported lengths are provided here.

Feature Code 6401
Length 7.6 m (25 ft)
Maximum Length (Customer Supplied) 762 m (2500 ft)

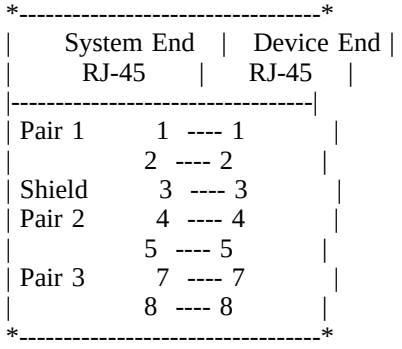

D.2.5 Cable (P) - RJ45 to DB25 Converter Cable

This cable is used to attach the serial cable (D) to the 16-port concentrator box. It converts from RJ45 to 25-pin D.

Feature Code 6402 (4 provided per 6402)
Length 0.45 m (1.5 ft)
Maximum Length 60 m (200 ft) - from concentrator to device, i.e. combining P & D

System End RJ-45	Device End 25 Pin D (Male)
Ground Shield 1	1
RTS 2	4
RD 3	3
CD 4	8
Signal Ground 5	7
TD 6	2
DTR 7	20
CTS 8	5

D.2.6 Cable (NB/NC) - 128-Port Asynchronous Controller Cable (8-wires)

The NB cable (15 ft) or the NC cable (9 inches) are used to attach remote 128 Async Node 16-port adapters.
Part Number 43G0937
Maximum Length (Customer Supplied) 15 ft

System End DB-15 pin	Signal	Device End DB-25 pin
1	RxD-	TxD- 1
2	RxD+	TxD+ 2
4	RxD-	TxD- 4
5	RxD+	TxD+ 5
6	TxD-	RxD- 6
7	TxD+	RxD+ 7
9	TxD-	RxD- 9
10	TxD+	RxD+ 10
Shell	ShGnd	ShGnd

D.2.7 Cable (ND) - 128-Port Asynchronous Controller Cable (4-wires)

The ND cable is used to attach 16-port Asinc adapters

Part Number No N/P

System End		Device End	
DB-15 pin	Signal	DB-25 pin	
1	RxD-	TxD-	1
2	RxD+	TxD+	2
6	TxD-	RxD-	6
7	TxD+	RxD+	7
Shell	ShGnd	ShGnd	

D.2.8 Cable (NK) - 10-pin RJ45 to Db25 Converter Cable (9 inches)

Cable NK is used for connections to a modem connected to another modem from which you can attach another device such as printers via cable D.

Part Number 43G0935

Signal Name	Remote Async RJ45	Device DB25
RI	1	22
DSR	2	6
RTS	3	4
CHASSIS GND	4	SHELL
TD	5	2
RD	6	3
SIGNAL GND	7	7
CTS	8	5
DTR	9	20
CD	10	8

D.2.9 Cable (NL) - 10-pin RJ45 to Db25 Terminal/Printer Customer Supplied

Cable NL can be attached to one of the 16-port adapter ports, and to another device such as printer on the other end.

```
*-----------------------------------------*
|Ran End |     Cabling Options       | Device |
| RJ-45  | 6 Pin  8 Pin  10 Pin     | Db-25  |
|-----------------------------------------|
| RI  1  |       :      :  1-------| 22 RI  |
| DSR*2  |       :  1 ---- 2-|-----| 20 DTR |
| RTS 3  |   1 ---- 2 ---- 3-|-----|  5 CTS |
| GND 4  |-- 2 ---- 3 ---- 4-|-----| Sh GND |
| TD  5  |-- 3 ---- 4 ---- 5-|-----|  3 RD  |
| RD  6  |-- 4 ---- 5 ---- 6-|-----|  2 TD  |
| SG  7  |-- 5 ---- 6 ---- 7-|-----|  7 SG  |
| CTS 8  |   6 ---- 7 ---- 8-|-----|  4 RTS |
| DTR 9  |       :  8 ---- 9-|--|--|  6 DSR |
| DCD*10 |       :      : 10--  *--|  8 DCD*|
*-----------------------------------------*
```

D.2.10 Cable (NM) - 10-pin RJ45 to Db25 Modem Cable Customer Supplied

Cable NM can be attached to one of the 16-port adapter ports, and to another device such as printer on the other end. This cable will only work with an interposer.

```
*-------------------------------------------------*
|Ran End |RJ-11 |RJ-11 |RJ-45 | RJ-45   |  Modem   |
| RJ-45  | 4 Pin| 6 Pin| 8 Pin| 10 Pin  |  Db-25   |
|-------------------------------------------------|
| RI  1  |       :      :      :  1-------| 22 RI  |
| DSR+2  |       :      :  1 ---- 2-------| 20 DTR |
| RTS 3  |       :  1 ---- 2 ---- 3-------|  5 CTS |
| GND 4  |-- 1 ---- 2 ---- 3 ---- 4-------| Sh GND |
| TD  5  |-- 2 ---- 3 ---- 4 ---- 5-------|  3 RD  |
| RD  6  |-- 3 ---- 4 ---- 5 ---- 6-------|  2 TD  |
| SG  7  |-- 4 ---- 5 ---- 6 ---- 7-------|  7 SG  |
| CTS 8  |       :  6 ---- 7 ---- 8-------|  4 RTS |
| DTR 9  |       :      :  8 ---- 9-------|  6 DSR |
| DCD+10 |       :      :      : 10-------|  8 DCD*|
*-------------------------------------------------*
```

Appendix E. Virtual Printer Colon Files and Formatter

In this section we will discuss the formatter and the virtual printer colon files.

E.1 The Formatter

The formatter is primarily used for setting up and initializing the printer, simple formatting and code page translation. There are only ten different formatters that are used for all of the supported printers and emulations that the printers support. The formatters that come with AIX are located in /usr/lib/lpd/pio/fmtrs. Code page translation is used to allow the printing of an ASCII file and have various characters changed or modified for printing. This is especially true in the case of band printers or other printers with limited or different character sets.

For most printers and applications it is unnecessary to modify the formatter since it basically just does a pass-thru of the data, or there is a formatter that will work with the printer selected. This is especially true of PostScript and HPGL files which are just passed through.

Note: Setup and initialize are still used for the printer, but the data is just passed through.

The strings used for the setup and initialization are kept in the colon files. Thus the formatter does not contain any escape codes pertaining to one particular printer. As an example, the basic difference between a PostScript file and a PostScript file formatted to be printed in a IBM 4019 LaserPrinter is the `statusdict begin 0 setpapertray end` commands used to initialize the printer. These commands are sent to the printer before the PostScript file. They appear in the first line of the formatted file.

An example of a very basic or generic formatter is given in Appendix E.3, “Generic Formatter” on page 225. The formatter is written in C, so a knowledge of the language and familiarity with the colon files is necessary. The formatter to be used is specified with the mf attribute in the colon file. To understand some of the syntax and the procedures used, it is recommended that the user browse the /usr/include/piostruct.h file.

Note: In AIX V4.1 you should install the Base Application Development Include Files (bos.adt.lib) in order to have the /usr/include/piostruct.h file.

E.2 Virtual Printer Colon File Syntax

As we have discussed, virtual printers are also represented by a set of files that collectively make up the virtual printer database. We have discussed editing these files many times previously. This section reviews the format of these files, called virtual printer colon files, to assist in editing them more effectively. The relationships between the various virtual printer colon files are outlined in Figure 31 on page 72.

The syntax of the strings in the colon file is similar to the syntax used in the terminfo files, except with enhancements to support printers. The calculations in the

© Copyright IBM Corp. 1991, 1994

strings may use the stack or the internal variables a-z to store integers for later use.

The % character is used to define the beginning of an escape sequence for an attribute in the custom and predef files. The % can be sent to the printer if it is entered twice. For example, %% sends the character % to the printer. To help explain the functionality of these commands, Table 15 on page 223 is provided below with a brief description following each command.

The table can also be found in InfoExplorer by doing a simple search on Printer Colon File Escape Sequences.

Table 15. Colon File Escape Sequences Examples

Escape seq	Description
%d	Pops an integer off the stack and converts to ASCII
%[1-9]d	Ex: %3d pops the integer and uses 3 chars, if too small pad with zeros, if too big only use low order bits
%c	Pops integer value and only uses low order byte
%h	Pops integer value and only keeps the 2 low order bytes
%a	Pops integer value like %h, but the order is low byte, then high
%Ixx	Includes the string whose attribute is xx. NOTE: if an included string contains a %Ixx then it uses a different stack
%I[xx,...,xx]	Same as above except for multiple strings
%Gxx	Gets integer (if not integer, atoi is used) and pushed on stack
%'c'	Pushes character on stack as low order byte of integer value
%{nn}	Pushes positive or negative integer nn on to the stack
%Lxx	Pushes the length of constant or string onto the stack
%P[a-z]	Pops the stack and stores in internal variable
%Z[a-z]	Zeros specified variable, %Za zeros the internal 'a' variable
%g[a-z]	Pushes the specified variable onto the stack
%+	Adds the first two values popped and pushes the result back on
%-	Subtracts the two values popped and pushes the result on
%*	Multiplies the two popped values and pushes the result on
%/	Divides the values (ex: %{6}%{2}%/ pushes the value 3 on stack
%m	Modulus the values (ex: %{17}%{9}%m pushes the value 8 on stack
%=	Equal values are compared (ex: %{2}%{2}%= pushes 1 on stack)
%>	If second value popped greater (ex: %{2}%{3}%> pushes 0 stack)
%<	If second value popped less (ex: %{2}%{3}%< pushes 1 (true))
%!	Negate first pop (ex: %{2}%! pushes 0, %{0}%! pushes 1)
%&	AND the first two values (ex: %{4}%{7}%& pushes 4 on stack)
%	OR the first two values (ex: ${5}%{3}% pushes 7 on stack)
%∧	EXCLUSIVE OR first two values (ex: %{6}%{3}%∧ pushes 5 stack)
%	1's COMPLEMENT first value and invert (%{-1}% pushes 0 stack)
%x	Pass through to the piocmdout subroutine, the number of bytes specified by the passthru argument from input to output without modification
%wx	While loop. Whenever the matching % is reached the internal variable specified is decremented by one. Execution is transferred back to the character following %wx as long as the value of the variable is greater than zero

E.2.1.1 If Then Else

This is an if then else statement:

```
%? expr %t thenpart %e elsepart %;
```

The else part of the expression is not required. Example from eS variable in 4201-3:

```
\33%?%Gwb%tS\1%eT%;
```

The \33 sends an octal 33, and the next part of the statement reads IF the value of wb (this value was pushed on the stack by %G) is + or one, then send the character S and octal 1, else send character T.

E.2.1.2 Else If

This is a nested else statement:

```
%? expr %t thenpart %e expr %t thenpart %e expr %t thenpart %e elsepart %;
```

Example:

```
%Gx%{6}%?%=%t%{2}%e%G_q%{3}%=%t%{1}%e%{0}%;%d
```

This command would push the value of x and the value 6. Next, the if statement is read if the two values popped are equal then push value two, else push the value of print quality and push the value 3 and compare for equality. If equal push the value one, else push the value 0. This command would then output a value of zero, one or two depending on the value of x and _q.

E.2.1.3 Command Line Flags

These flags are usually used in pipeline definitions. If specified in attribute strings they apply to the flags passed to the formatter. For formatter flags, the flag must have been included in the optstring parameter to the piogetopt subroutine:

%Cy Push the value 1 (true) on stack if the y flag was specified on the command line. Otherwise push the value 0 (false).

%Fxy or %F[...]; Shorthand for %?%Cy%t-x%|_y%; If the Y flag is specified on the command line, generate -x yarg. If ! is specified for x, then the -x will not be generated.

Note: %Faa%Fbb%Fcc can be specified as %F&lrbk.abc] Values referenced by y or [...] have attribute names whose first character is _ and the second character is y or a character in the string [...].

%fxy or %f[...]; Similar to the %Fxy, except that no space is placed between the flag name and argument, unless the argument is the null string.

%vxy or %v[...]. Similar to the %fxy, but used only for the pioout command, the Device Driver Interface Program, to generate flags and arguments for override values specified by the piobe command.

Note: %v references attributes with the first character of @.

%Ux or %U[...] Tells the Print Job Manager that flag x is actually referenced. This prevents the Print Job Manager from rejecting the flag.

The use of these commands and variables is provided so the conditions and printer settings can be checked to ensure the correct command is issued. Escape sequences can be entered by just entering a backslash and the three octal digits, or just the character itself. The problem with this method is if someone selects double high print, the line spacing should be changed. A thorough understanding of the printer is necessary in order to properly set up all of the conditions.

A good way to proceed is to use a similar predefined printer type when the printers are very similar. Where there are no similar printer types, use the `other` printer selection and configure the attributes needed.

While changing each of the parameters, each entry will be echoed as it is changed. When the changes have all been completed, press Enter and the new custom printer will be made in the custom directory.

In order to store a template of these settings for later use or for defining other printers the `piopredef` command is executed. The piopredef command will copy the printer to the predef subdirectory for later use. To run this command, a line similar to the following should be executed:

```
piopredef -d Qdevice -q Queue -a datastream -t type_of_printer
```

Note: The mL flag is used to identify the printer when adding the virtual printer. When making the printer device, always specify other serial or other parallel printer when wanting to access this virtual printer definition. Otherwise the `mkvirprt` command will not prompt the user for a Virtual Printer Type, since it was already selected when the printer device was created.

E.3 Generic Formatter

In this section we will discuss about a generic formatter example.

E.3.1 Compiling and Linking a Print Formatter

Use an editor to create an imports file named sample.imp. The file should contain the following:

```
#!
main
piogetvals
piogetopt
piomsgout
pioexit
piomode
piodatasent
piopgskip
statusfile
piocmdout
piogetstr
```

Use an editor to create an exports file named sample.exp. The file should contain the following:

```
#!
setup
initialize
passthru
restore
lineout
```

Enter the following to compile and link the formatter:

```
cc -o sample -bI:sample.imp -bE:sample.exp sample.c
```

E.3.2 A Print Formatter Example Program

```
*/

/*** Print Formatter Example ***/

#include  <stdio.h>
#include  <piostruct.h>

/* STRING CONSTANTS */
/* Initialize Printer, Restore Printer, Form Feed */
#define INIT_CMD       "ci"
#define REST_CMD       "cr"
#define FF_CMD         "af"

/* INTEGER and STRING VARIABLES */
/* Page Length, Page Width, Top Margin, Bottom Margin */
#define Pglen              (*(_Pglan + piomode))
#define Pgwidth            (*(_Pgwidth + piomode))
#define Tmarg              (*(_Tmarg + piomode))
#define Bmarg              (*(_Bmarg + piomode))

/* Indention, Begin Page, Form Feed?, Pass-through? */
#define Indent             (*(_Indent + piomode))
#define Beginpg            (*(_Beginpg + piomode))
#define Do_formfeed        (*(_Do_formfeed + piomode))
#define Passthru           (*(_Passthru + piomode))

/* Initialize Printer?, Restore Printer? */
#define Init_printer       (*(_Init_printer + piomode))
#define Restoreprinter     (*(_Restoreprinter + piomode))

/* Command Names: Form Feed, Vertical Incrment & Decr. */
#define Ff_cmd             (*(_Ff_cmd + piomode))
#define Vincr_cmd          (*(_Vincr_cmd + piomode))
#define Vdecr_cmd          (*(_Vdecr_cmd + piomode))

/* Work Variables For Vertical Increment & Decrement */
#define Vincr              (*(_Vincr + piomode))
#define Vdecr              (*(_Vdecr + piomode))

/* Variables Referenced By Above #define's */
int *_Pglen, *_Pgwidth, *_Tmarg, *_Bmarg, *_Indent,
*_Beginpg, *_Do_formfeed, *_Passthru, *_Init_printer,
```

```
*_Restoreprinter, *_Vincr, *_Vdecr;
struct str_info *_Ff_cmd, *_Vincr_cmd, *_Vdecr_cmd;

/* TABLE OF ATTRIBUTE VALUES */
struct attrparms attrtable[] = { /*
name   data type lookup  address of pointer *
"_b",   VAR_INT,   NULL,   (union dtypes *) &_Bmarg,
"_g",   VAR_INT,   NULL,   (union dtypes *) &_Beginpg,
"_i",   VAR_INT,   NULL,   (union dtypes *) &_Indent,
"_j",   VAR_INT,   NULL,   (union dtypes *) &_Init_printer,
"_l",   VAR_INT,   NULL,   (union dtypes *) &_Pglen,
"_t",   VAR_INT,   NULL,   (union dtypes *) &_Tmarg,
"_w",   VAR_INT,   NULL,   (union dtypes *) &_Pgwidth,
"_J",   VAR_INT,   NULL,   (union dtypes *) &_Restoreprinter,
"_Z",   VAR_INT,   NULL,   (union dtypes *) &_Do_formfeed,
"wp",   VAR_INT,   NULL,   (union dtypes *) &_Passthru,
"wf",   VAR_STR,   NULL,   (union dtypes *) &_Ff_cmd,
"wi",   VAR_STR,   NULL,   (union dtypes *) &_Vincr_cmd,
"wy",   VAR_STR,   NULL,   (union dtypes *) &_Vdecr_cmd,
"wV",   VAR_INT,   NULL,   (union dtypes *) &_Vincr,
"wD",   VAR_INT,   NULL,   (union dtypes *) &_Vdecr,
NULL,   0      ,   NULL,   NULL };

int pglen, tmarg, bmarg, vpos, vtab_base;
struct shar_vars sharevars;

struct shar_vars *  /*** Setup Processing ***/
setup(argc, argv, passthru)
    unsigned argc;
    char *argv[];
    int passthru;
{
/* Initialize Variables and Command Line Values */
(void) piogetvals(attrtable, NULL);
(void) piogetopt(argc, argv, NULL, NULL);

/*(need to verify values entered by user)*/

/* Initialize Work Variables */
pglen = Pglen * Vincr;
tmarg = Tmarg * Vincr;
bmarg = Bmarg * Vincr;
piopgskip = Beginpg - 1;

/* Check For Pass-through Option */
if (Passthru = passthru)
     return(NULL);

/* Initialize Pointers to Vertical Spacing */
/* Variables Shared With Formatter Driver  */
/* (refer to /usr/include/piostruct.h)     */
sharevars._pl        = &pglen;
sharevars._tmarg     = &tmarg;
sharevars._bmarg     = &bmarg;
sharevars._vpos      = &vpos;
sharevars._vtab_base = &vtab_base;
sharevars._vincr     = &Vincr;
sharevars._vincr_cmd = (&Vincr_cmd)->ptr;
```

```
sharevars._vdecr     = &Vdecr;
sharevars._vdecr_cmd = (&Vdecr_cmd)->ptr;
sharevars._ff_cmd    = (&Ff_cmd)->ptr;
sharevars._ff_at_eof = &Do_formfeed;

return(&sharevars);
}

initialize() /*** Initialize the Printer ***/
{
if (Init_printer)
    (void) piocmdout(INIT_CMD, NULL, 0, NULL);
return(0);
}

lineout(fileptr) /*** Format a Line ***/
FILE *fileptr;
{
int ch, charcount = 0;
for (ch = 0; ch < Indent; ch++)
     pioputchar(' ');
while ((ch=piogetc(fileptr)) != '\n' && ch != EOF
       && charcount < Pgwidth) {
     charcount++;
     pioputchar(ch);
}
vpos += Vincr;
return(charcount);
}

passthru() /*** Pass-through Option ***/
{
int ch;
while ((ch = piogetc(stdin)) != EOF)
     pioputchar(ch);
if (piodatasent && Do_formfeed)
     (void) piocmdout(FF_CMD, NULL, 0, NULL);
return(0);
}

restore() /*** Restore the Printer ***/
{
if (Restoreprinter)
     (void) piocmdout(REST_CMD, NULL, 0, NULL);
return(0);
}
```

Appendix F. iptrace Diagnostic

Printing through the network is something as normal as printing to a printer directly attached to your system. Through networking you can access resources that can be attached to a system in the same room as yours or on the other side of the planet.

As TCP/IP protocol has been used as the standard protocol for UNIX systems, printing through the network under AIX is printing through TCP/IP. All the network services for printing are based on TCP/IP.

In this section we will discuss an example using the `iptrace` command. The `iptrace` command provides interface-level packet tracing for internet protocols. It records Internet packets received from configured interfaces. In our example we will use `iptrace` to trace only the printer packets.

F.1 How to Interpret the iptrace Command

Following is the procedure to get a trace output using the `iptrace` command:

1. Issue the commands:
   a. `#iptrace -p printer -a -b -s client_host -d server_host /tmp/trace.out`
      - `-p` then the word printer, to trace printer packets
      - `-a` to suppress ARP packets
      - `-b` to invoke bidirectional mode
      - `-s` the client_host name (or the specific IP address)
      - `-d` the server_host name (or the specific IP address)

   b. `#ls -l /tmp`
      - Make sure the file is 11 bytes

   c. <enter the command you would like to trace>
      - Make any files sent to the printer very small
      - Example: `# echo " this is test data " | qprt -Pqueuename`

   d. `#ls -l /tmp`
      - Make sure the file is larger than 11 bytes
      - If not:
        – Try the specific IP addresses under client and server
        – Check to see if the names were entered correctly

   e. `#ps -ef | grep iptrace`

   f. `#kill -9 <pid#>`

2. Format the output with the `ipreport` command:
   - `#ipreport /tmp/trace.out > /tmp/report.out`

© Copyright IBM Corp. 1991, 1994

3. In the /tmp/report.out file, pay attention to the TCP header breakdown stanzas. The three fields to pay attention to are:

   a. `<source port, destination port>`, which will tell you what direction the packet is traveling.

   b. `flags<  |>`, which will tell you what whether it's trying to synch, acknowledge, reset, push, or finish.

   c. `00000000 {some hex numbers}  | ascii equivalent |`, which will show the data transmitted.

F.2 Example Using the iptrace Command

In this example we have used the following commands and the procedure in section F.1, “How to Interpret the iptrace Command” on page 229:

```
#iptrace -p printer -a -b -s tesch.aix.dfw.ibm.com -d sbhat.aix.dfw.ibm.com \
> /tmp/trace.out
#echo "AAAAA" | qprt -Psanjay
```

Where `sanjay` is a queue to the remote host `sbhat` with queue name `40asc`.

The packets are exchanged between the `rembak` process in the client (tesch.aix.dfw.ibm.com) and the lpd daemon in the server (sbhat.aix.dfw.ibm.com). Packets with `PUSH` in `flags< >` indicate data is exchanged between rembak and lpd. No data is exchanged between rembak and lpd when you have a single `ACK` in `flags< >`.

The output for the `iptrace` command in the `/tmp/report.out` is:

```
**********  HANDSHAKING TO ESTABLISH CONTACT WITH SERVER ***************

=====( packet transmitted on interface tr0 )=====Tue Nov  8 18:39:26 1994
802.5 packet

802.5 MAC header:
access control field = 0, frame control field = 40
[ src = 10:00:5a:a8:84:9d, dst = 10:00:5a:c9:4e:eb]
802.2 LLC header:
dsap aa, ssap aa, ctrl 3, proto 0:0:0, type 800 (IP)
IP header breakdown:
     < SRC =     9.19.129.12 >  (tesch.aix.dfw.ibm.com)
     < DST =     9.19.129.11 >  (sbhat.aix.dfw.ibm.com)
     ip_v=4, ip_hl=20, ip_tos=0, ip_len=44, ip_id=11019, ip_off=0
     ip_ttl=60, ip_sum=3f84, ip_p = 6 (TCP)
TCP header breakdown:
     <source port=1021, destination port=515(printer) >
     th_seq=50632201, th_ack=0
     th_off=6, flags<SYN |>
     th_win=16384, th_sum=cb8c, th_urp=0
00000000     020405ac                                |....           |
```

```
=====( packet received on interface tr0 )=====Tue Nov  8 18:39:26 1994
802.5 packet

802.5 MAC header:
access control field = 10, frame control field = 40
[ src = 10:00:5a:c9:4e:eb, dst = 10:00:5a:a8:84:9d]
802.2 LLC header:
dsap aa, ssap aa, ctrl 3, proto 0:0:0, type 800 (IP)
IP header breakdown:
     < SRC =     9.19.129.11 >  (sbhat.aix.dfw.ibm.com)
     < DST =     9.19.129.12 >  (tesch.aix.dfw.ibm.com)
     ip_v=4, ip_hl=20, ip_tos=0, ip_len=44, ip_id=32220, ip_off=0
     ip_ttl=60, ip_sum=ecb2, ip_p = 6 (TCP)
TCP header breakdown:
     <source port=515(printer), destination port=1021 >
     th_seq=e7a4fe01, th_ack=50632202
     th_off=6, flags<SYN |ACK |>
     th_win=15972, th_sum=e770, th_urp=0
00000000     020405ac                                |....           |

=====( packet transmitted on interface tr0 )=====Tue Nov  8 18:39:26 1994
802.5 packet

802.5 MAC header:
access control field = 0, frame control field = 40
[ src = 10:00:5a:a8:84:9d, dst = 10:00:5a:c9:4e:eb]
802.2 LLC header:
dsap aa, ssap aa, ctrl 3, proto 0:0:0, type 800 (IP)
IP header breakdown:
     < SRC =     9.19.129.12 >  (tesch.aix.dfw.ibm.com)
     < DST =     9.19.129.11 >  (sbhat.aix.dfw.ibm.com)
     ip_v=4, ip_hl=20, ip_tos=0, ip_len=40, ip_id=11020, ip_off=0
     ip_ttl=60, ip_sum=3f87, ip_p = 6 (TCP)
TCP header breakdown:
     <source port=1021, destination port=515(printer) >
     th_seq=50632202, th_ack=e7a4fe02
     th_off=5, flags<ACK |>
     th_win=15972, th_sum=ff25, th_urp=0
```

```
=====( packet transmitted on interface tr0 )=====Tue Nov  8 18:39:26 1994
802.5 packet

****************** SEND Print request with queue name ***************

802.5 MAC header:
access control field = 0, frame control field = 40
[ src = 10:00:5a:a8:84:9d, dst = 10:00:5a:c9:4e:eb]
802.2 LLC header:
dsap aa, ssap aa, ctrl 3, proto 0:0:0, type 800 (IP)
IP header breakdown:
     < SRC =     9.19.129.12 >  (tesch.aix.dfw.ibm.com)
     < DST =     9.19.129.11 >  (sbhat.aix.dfw.ibm.com)
     ip_v=4, ip_hl=20, ip_tos=0, ip_len=47, ip_id=11021, ip_off=0
     ip_ttl=60, ip_sum=3f7f, ip_p = 6 (TCP)
TCP header breakdown:
     <source port=1021, destination port=515(printer) >
     th_seq=50632202, th_ack=e7a4fe02
     th_off=5, flags<PUSH |ACK |>
     th_win=15972, th_sum=4f1e, th_urp=0
00000000     02343061 73630a                         |.40asc.         |

=====( packet received on interface tr0 )=====Tue Nov  8 18:39:26 1994
802.5 packet


********  Server ACKnowledgement of queue request to 40asc *************
802.5 MAC header:
access control field = 10, frame control field = 40
[ src = 10:00:5a:c9:4e:eb, dst = 10:00:5a:a8:84:9d]
802.2 LLC header:
dsap aa, ssap aa, ctrl 3, proto 0:0:0, type 800 (IP)
IP header breakdown:
     < SRC =     9.19.129.11 >  (sbhat.aix.dfw.ibm.com)
     < DST =     9.19.129.12 >  (tesch.aix.dfw.ibm.com)
     ip_v=4, ip_hl=20, ip_tos=0, ip_len=40, ip_id=32222, ip_off=0
     ip_ttl=60, ip_sum=ecb4, ip_p = 6 (TCP)
TCP header breakdown:
     <source port=515(printer), destination port=1021 >
     th_seq=e7a4fe02, th_ack=50632209
     th_off=5, flags<ACK |>
     th_win=15972, th_sum=ff1e, th_urp=0

************* LPD acknowledgent that queue is ok ************************
************* Return Code 0 indicates everything is ok for that queue ****
```

```
=====( packet received on interface tr0 )=====Tue Nov  8 18:39:26 1994
802.5 packet

802.5 MAC header:
access control field = 10, frame control field = 40
[ src = 10:00:5a:c9:4e:eb, dst = 10:00:5a:a8:84:9d]
802.2 LLC header:
dsap aa, ssap aa, ctrl 3, proto 0:0:0, type 800 (IP)
IP header breakdown:
     < SRC =     9.19.129.11 >  (sbhat.aix.dfw.ibm.com)
     < DST =     9.19.129.12 >  (tesch.aix.dfw.ibm.com)
     ip_v=4, ip_hl=20, ip_tos=0, ip_len=41, ip_id=32223, ip_off=0
     ip_ttl=60, ip_sum=ecb2, ip_p = 6 (TCP)
TCP header breakdown:
     <source port=515(printer), destination port=1021 >
     th_seq=e7a4fe02, th_ack=50632209
     th_off=5, flags<PUSH |ACK |>
     th_win=15972, th_sum=ff15, th_urp=0
00000000     00                                        |.               |


**************** Send number of bytes in file and datafile name **********

=====( packet transmitted on interface tr0 )=====Tue Nov  8 18:39:26 1994
802.5 packet

802.5 MAC header:
access control field = 0, frame control field = 40
[ src = 10:00:5a:a8:84:9d, dst = 10:00:5a:c9:4e:eb]
802.2 LLC header:
dsap aa, ssap aa, ctrl 3, proto 0:0:0, type 800 (IP)
IP header breakdown:
     < SRC =     9.19.129.12 >  (tesch.aix.dfw.ibm.com)
     < DST =     9.19.129.11 >  (sbhat.aix.dfw.ibm.com)
     ip_v=4, ip_hl=20, ip_tos=0, ip_len=55, ip_id=11022, ip_off=0
     ip_ttl=60, ip_sum=3f76, ip_p = 6 (TCP)
TCP header breakdown:
     <source port=1021, destination port=515(printer) >
     th_seq=50632209, th_ack=e7a4fe03
     th_off=5, flags<PUSH |ACK |>
     th_win=15972, th_sum=36a4, th_urp=0
00000000     03372064 66413536 36746573 63680a       |.7 dfA566tesch. |
```

```
=====( packet received on interface tr0 )=====Tue Nov  8 18:39:26 1994
802.5 packet

*************  Return Code 0 says I got number of bytes and name *****

802.5 MAC header:
access control field = 10, frame control field = 40
[ src = 10:00:5a:c9:4e:eb, dst = 10:00:5a:a8:84:9d]
802.2 LLC header:
dsap aa, ssap aa, ctrl 3, proto 0:0:0, type 800 (IP)
IP header breakdown:
     < SRC =     9.19.129.11 >  (sbhat.aix.dfw.ibm.com)
     < DST =     9.19.129.12 >  (tesch.aix.dfw.ibm.com)
     ip_v=4, ip_hl=20, ip_tos=0, ip_len=41, ip_id=32224, ip_off=0
     ip_ttl=60, ip_sum=ecb1, ip_p = 6 (TCP)
TCP header breakdown:
     <source port=515(printer), destination port=1021 >
     th_seq=e7a4fe03, th_ack=50632218
     th_off=5, flags<PUSH |ACK |>
     th_win=15972, th_sum=ff05, th_urp=0
00000000     00                                      |.              |

********* Actual data file, can be in one or more packets ***************

=====( packet transmitted on interface tr0 )=====Tue Nov  8 18:39:26 1994
802.5 packet

802.5 MAC header:
access control field = 0, frame control field = 40
[ src = 10:00:5a:a8:84:9d, dst = 10:00:5a:c9:4e:eb]
802.2 LLC header:
dsap aa, ssap aa, ctrl 3, proto 0:0:0, type 800 (IP)
IP header breakdown:
     < SRC =     9.19.129.12 >  (tesch.aix.dfw.ibm.com)
     < DST =     9.19.129.11 >  (sbhat.aix.dfw.ibm.com)
     ip_v=4, ip_hl=20, ip_tos=0, ip_len=47, ip_id=11023, ip_off=0
     ip_ttl=60, ip_sum=3f7d, ip_p = 6 (TCP)
TCP header breakdown:
     <source port=1021, destination port=515(printer) >
     th_seq=50632218, th_ack=e7a4fe04
     th_off=5, flags<PUSH |ACK |>
     th_win=15972, th_sum=313b, th_urp=0
00000000     41414141 41410a                        |AAAAAA.        |

*************** Server ACKnowledges receipt of data packet ***********
```

```
=====( packet received on interface tr0 )=====Tue Nov  8 18:39:26 1994
802.5 packet

802.5 MAC header:
access control field = 10, frame control field = 40
[ src = 10:00:5a:c9:4e:eb, dst = 10:00:5a:a8:84:9d]
802.2 LLC header:
dsap aa, ssap aa, ctrl 3, proto 0:0:0, type 800 (IP)
IP header breakdown:
     < SRC =     9.19.129.11 >  (sbhat.aix.dfw.ibm.com)
     < DST =     9.19.129.12 >  (tesch.aix.dfw.ibm.com)
     ip_v=4, ip_hl=20, ip_tos=0, ip_len=40, ip_id=32225, ip_off=0
     ip_ttl=60, ip_sum=ecb1, ip_p = 6 (TCP)
TCP header breakdown:
     <source port=515(printer), destination port=1021 >
     th_seq=e7a4fe04, th_ack=5063221f
     th_off=5, flags<ACK |>
     th_win=15972, th_sum=ff06, th_urp=0


******** client acknowledges end of data **************************

=====( packet transmitted on interface tr0 )=====Tue Nov  8 18:39:26 1994
802.5 packet

802.5 MAC header:
access control field = 0, frame control field = 40
[ src = 10:00:5a:a8:84:9d, dst = 10:00:5a:c9:4e:eb]
802.2 LLC header:
dsap aa, ssap aa, ctrl 3, proto 0:0:0, type 800 (IP)
IP header breakdown:
     < SRC =     9.19.129.12 >  (tesch.aix.dfw.ibm.com)
     < DST =     9.19.129.11 >  (sbhat.aix.dfw.ibm.com)
     ip_v=4, ip_hl=20, ip_tos=0, ip_len=41, ip_id=11024, ip_off=0
     ip_ttl=60, ip_sum=3f82, ip_p = 6 (TCP)
TCP header breakdown:
     <source port=1021, destination port=515(printer) >
     th_seq=5063221f, th_ack=e7a4fe04
     th_off=5, flags<PUSH |ACK |>
     th_win=15972, th_sum=fefd, th_urp=0
00000000     00                                        |.              |


******** LPD acknowledges receipt of data *******************************
```

```
=====( packet received on interface tr0 )=====Tue Nov  8 18:39:26 1994
802.5 packet

802.5 MAC header:
access control field = 10, frame control field = 40
[ src = 10:00:5a:c9:4e:eb, dst = 10:00:5a:a8:84:9d$rbrk.
802.2 LLC header:
dsap aa, ssap aa, ctrl 3, proto 0:0:0, type 800 (IP)
IP header breakdown:
     < SRC =     9.19.129.11 >  (sbhat.aix.dfw.ibm.com)
     < DST =     9.19.129.12 >  (tesch.aix.dfw.ibm.com)
     ip_v=4, ip_hl=20, ip_tos=0, ip_len=41, ip_id=32226, ip_off=0
     ip_ttl=60, ip_sum=ecaf, ip_p = 6 (TCP)
TCP header breakdown:
     <source port=515(printer), destination port=1021 >
     th_seq=e7a4fe04, th_ack=50632220
     th_off=5, flags<PUSH |ACK |>
     th_win=15972, th_sum=fefc, th_urp=0
00000000     00                                        |.              |

************ Rembak sends number of bytes in control file ***************
************ Followed by control file name                ***************


=====( packet transmitted on interface tr0 )=====Tue Nov  8 18:39:27 1994
802.5 packet

802.5 MAC header:
access control field = 0, frame control field = 40
[ src = 10:00:5a:a8:84:9d, dst = 10:00:5a:c9:4e:eb]
802.2 LLC header:
dsap aa, ssap aa, ctrl 3, proto 0:0:0, type 800 (IP)
IP header breakdown:
     < SRC =     9.19.129.12 >  (tesch.aix.dfw.ibm.com)
     < DST =     9.19.129.11 >  (sbhat.aix.dfw.ibm.com)
     ip_v=4, ip_hl=20, ip_tos=0, ip_len=56, ip_id=11025, ip_off=0
     ip_ttl=60, ip_sum=3f72, ip_p = 6 (TCP)
TCP header breakdown:
     <source port=1021, destination port=515(printer) >
     th_seq=50632220, th_ack=e7a4fe05
     th_off=5, flags<PUSH |ACK |>
     th_win=15972, th_sum=9af3, th_urp=0
00000000     02343720 63664135 36367465 7363680a     |.47 cfA566tesch.|


************** LPD says I'm ready for control file  ******************
```

```
=====( packet received on interface tr0 )=====Tue Nov  8 18:39:27 1994
802.5 packet

802.5 MAC header:
access control field = 10, frame control field = 40
[ src = 10:00:5a:c9:4e:eb, dst = 10:00:5a:a8:84:9d]
802.2 LLC header:
dsap aa, ssap aa, ctrl 3, proto 0:0:0, type 800 (IP)
IP header breakdown:
     < SRC =     9.19.129.11 >  (sbhat.aix.dfw.ibm.com)
     < DST =     9.19.129.12 >  (tesch.aix.dfw.ibm.com)
     ip_v=4, ip_hl=20, ip_tos=0, ip_len=41, ip_id=32227, ip_off=0
     ip_ttl=60, ip_sum=ecae, ip_p = 6 (TCP)
TCP header breakdown:
     <source port=515(printer), destination port=1021 >
     th_seq=e7a4fe05, th_ack=50632230
     th_off=5, flags<PUSH |ACK |>
     th_win=15972, th_sum=feeb, th_urp=0
00000000     00                                        |.               |


************ REMBAK sends control file with flags to print **************

=====( packet transmitted on interface tr0 )=====Tue Nov  8 18:39:27 1994
802.5 packet

802.5 MAC header:
access control field = 0, frame control field = 40
[ src = 10:00:5a:a8:84:9d, dst = 10:00:5a:c9:4e:eb]
802.2 LLC header:
dsap aa, ssap aa, ctrl 3, proto 0:0:0, type 800 (IP)
IP header breakdown:
     < SRC =     9.19.129.12 >  (tesch.aix.dfw.ibm.com)
     < DST =     9.19.129.11 >  (sbhat.aix.dfw.ibm.com)
     ip_v=4, ip_hl=20, ip_tos=0, ip_len=87, ip_id=11026, ip_off=0
     ip_ttl=60, ip_sum=3f52, ip_p = 6 (TCP)
TCP header breakdown:
     <source port=1021, destination port=515(printer) >
     th_seq=50632230, th_ack=e7a4fe06
     th_off=5, flags<PUSH |ACK |>
     th_win=15972, th_sum=a28f, th_urp=0
00000000     48746573 63680a50 726f6f74 0a666466     |Htesch.Proot.fdf|
00000010     41353636 74657363 680a5564 66413536     |A566tesch.UdfA56|
00000020     36746573 63680a4e 61616161 61610a       |6tesch.Naaaaaa. |


***********  Server acknowledges receipt of file *********************
```

```
=====( packet received on interface tr0 )=====Tue Nov  8 18:39:27 1994
802.5 packet

802.5 MAC header:
access control field = 10, frame control field = 40
[ src = 10:00:5a:c9:4e:eb, dst = 10:00:5a:a8:84:9d]
802.2 LLC header:
dsap aa, ssap aa, ctrl 3, proto 0:0:0, type 800 (IP)
IP header breakdown:
     < SRC =     9.19.129.11 >  (sbhat.aix.dfw.ibm.com)
     < DST =     9.19.129.12 >  (tesch.aix.dfw.ibm.com)
     ip_v=4, ip_hl=20, ip_tos=0, ip_len=40, ip_id=32228, ip_off=0
     ip_ttl=60, ip_sum=ecae, ip_p = 6 (TCP)
TCP header breakdown:
     <source port=515(printer), destination port=1021 >
     th_seq=e7a4fe06, th_ack=5063225f
     th_off=5, flags<ACK |>
     th_win=15972, th_sum=fec4, th_urp=0


************ REMBAK acknowledges end of file ok ******************

=====( packet transmitted on interface tr0 )=====Tue Nov  8 18:39:27 1994
802.5 packet

802.5 MAC header:
access control field = 0, frame control field = 40
[ src = 10:00:5a:a8:84:9d, dst = 10:00:5a::c9:4e:eb]
802.2 LLC header:
dsap aa, ssap aa, ctrl 3, proto 0:0:0, type 800 (IP)
IP header breakdown:
     < SRC =     9.19.129.12 >  (tesch.aix.dfw.ibm.com)
     < DST =     9.19.129.11 >  (sbhat.aix.dfw.ibm.com)
     ip_v=4, ip_hl=20, ip_tos=0, ip_len=41, ip_id=11027, ip_off=0
     ip_ttl=60, ip_sum=3f7f, ip_p = 6 (TCP)
TCP header breakdown:
     <source port=1021, destination port=515(printer) >
     th_seq=5063225f, th_ack=e7a4fe06
     th_off=5, flags<PUSH |ACK |>
     th_win=15972, th_sum=febb, th_urp=0
00000000     00                                        |.              |


************ LPD acknowledges receipt of file ok with 00 ******************
```

```
=====( packet received on interface tr0 )=====Tue Nov  8 18:39:27 1994
802.5 packet

802.5 MAC header:
access control field = 10, frame control field = 40
[ src = 10:00:5a:c9:4e:eb, dst = 10:00:5a:a8:84:9d]
802.2 LLC header:
dsap aa, ssap aa, ctrl 3, proto 0:0:0, type 800 (IP)
IP header breakdown:
     < SRC =     9.19.129.11 >  (sbhat.aix.dfw.ibm.com)
     < DST =     9.19.129.12 >  (tesch.aix.dfw.ibm.com)
     ip_v=4, ip_hl=20, ip_tos=0, ip_len=41, ip_id=32229, ip_off=0
     ip_ttl=60, ip_sum=ecac, ip_p = 6 (TCP)
TCP header breakdown:
     <source port=515(printer), destination port=1021 >
     th_seq=e7a4fe06, th_ack=50632260
     th_off=5, flags<PUSH |ACK |>
     th_win=15972, th_sum=feba, th_urp=0
00000000     00                                        |.               |

********* Client says I'm done with this TCP/IP job **********************


=====( packet transmitted on interface tr0 )=====Tue Nov  8 18:39:27 1994
802.5 packet

802.5 MAC header:
access control field = 0, frame control field = 40
[ src = 10:00:5a:a8:84:9d, dst = 10:00:5a:c9:4e:eb]
802.2 LLC header:
dsap aa, ssap aa, ctrl 3, proto 0:0:0, type 800 (IP)
IP header breakdown:
     < SRC =     9.19.129.12 >  (tesch.aix.dfw.ibm.com)
     < DST =     9.19.129.11 >  (sbhat.aix.dfw.ibm.com)
     ip_v=4, ip_hl=20, ip_tos=0, ip_len=40, ip_id=11028, ip_off=0
     ip_ttl=60, ip_sum=3f7f, ip_p = 6 (TCP)
TCP header breakdown:
     <source port=1021, destination port=515(printer) >
     th_seq=50632260, th_ack=e7a4fe07
     th_off=5, flags<FIN |ACK |>
     th_win=15972, th_sum=fec1, th_urp=0

************* Server ACKnowledges we are done, ***********************
************* Sometimes comes with RST or FIN,ACK ********************
```

```
=====( packet received on interface tr0 )=====Tue Nov  8 18:39:27 1994
802.5 packet

802.5 MAC header:
access control field = 10, frame control field = 40
[ src = 10:00:5a:c9:4e:eb, dst = 10:00:5a:a8:84:9d]
802.2 LLC header:
dsap aa, ssap aa, ctrl 3, proto 0:0:0, type 800 (IP)
IP header breakdown:
     < SRC =     9.19.129.11 >  (sbhat.aix.dfw.ibm.com)
     < DST =     9.19.129.12 >  (tesch.aix.dfw.ibm.com)
     ip_v=4, ip_hl=20, ip_tos=0, ip_len=40, ip_id=32230, ip_off=0
     ip_ttl=60, ip_sum=ecac, ip_p = 6 (TCP)
TCP header breakdown:
     <source port=515(printer), destination port=1021 >
     th_seq=e7a4fe07, th_ack=50632261
     th_off=5, flags<ACK |>
     th_win=15972, th_sum=fec1, th_urp=0


++++++ END OF REPORT ++++++
```

F.3 Summary of iptrace Report

Direction	Flag	Data
rembak -> lpd	syn	x020405ac
lpd -> rembak	syn/ack	x020405ac
rembak -> lpd	ack	
rembak -> lpd	push/ack	|.40asc. |
lpd -> rembak	ack	
lpd -> rembak	push/ack	x00
rembak -> lpd	push/ack	|.7 dfA566tesch. |
lpd -> rembak	push/ack	x00
rembak -> lpd	push/ack	|AAAAAA. |
lpd -> rembak	ack	
rembak -> lpd	push/ack	x00
lpd -> rembak	push/ack	x00
rembak -> lpd	push/ack	|.47 cfA566tesch.|
lpd -> rembak	push/ack	x00
rembak -> lpd	push/ack	|Htesch.Proot.fdf| |A566tesch.UdfA56| |6tesch.Naaaaaa. |
lpd -> rembak	ack	
rembak -> lpd	push/ack	x00
lpd -> rembak	push/ack	x00
rembak -> lpd	fin/ack	
lpd -> rembak	ack	

Appendix G. Data Streams

Data streams have become very important in the network printing world. This is because system administrators have to know the different types of data streams that a shared printer will use so they print from any platform to any printer anywere over the network.

This section explains the following:

- What is a Data Stream?
- Most common Data Stream Descriptions
- Data Streams Supported by Print Services Facility/6000
- Overview of Supported Data Streams for AIX and PSF/6000

G.1 What is a Data Stream?

A data stream is a well-defined set of commands, which allows the computer to tell the printer what and where to print. There are different implementations of data streams for different hardware platforms.

Data streams are based on basically three methods:

1. All of the translation of the document (for example, adding commands, downloading fonts, adding electronic forms, etc.) is done by the printer driver of your applications. It converts the programs data format into data stream commands that the printer understands. This sort of implementation was used for all line printers and early laser printers. As laser printers became more sophisticated the data stream was enhanced to support full page addressing and scalable fonts.

2. As printers became more intelligent and developed the capability to use pages instead of lines, a new concept for data streams came out. This concept is PostScript, which is a programming language designed to send information to intelligent output devices, independent of hardware. When you send data to any PostScript device, the driver translates the document into the appropriate PostSript command. This command is sent to the printer for a final translation by a PostScript interpreter within the printer.

   PostScript has its advantages, such as a decrease of CPU time and device independence. However it also has disadvantages, which is that it take much more time and processing power to print a document on a PostScript device than to print it using other data streams.

3. The third method is a new product that combines the usage of printer drivers with the capabilities of powerful intelligent printers which understand the IBM Intelligent Print Data Stream (IPDS). PSF/6000 translates many types of data streams from different platforms to the apppropriate supported data stream of a specific printer. PSF/6000 incorporates a different type of data stream which was only used before on bigger platforms such as System/370 or AS/400. This data stream is the Advanced Function Presentation and Mixed Object:Document Content Architecture for Presentation (MO:DCA-P).

   Advanced Function Presentation is the combination of printers and supporting software that allows you to print documents from a variety of operating systems

© Copyright IBM Corp. 1991, 1994

on all-points-addressable printers, which have varying levels of speed and function. There are also Windows-based products available from the online viewing of documents.

G.2 Most Popular Data Streams Description

This section describes the most common data streams supported for AIX and the combination AIX/PSF/6000.

G.2.1 Hewlett-Packard Printer Control Language (HP-PCL)

PCL was designed to be expandable, enabling future versions to add additional commands and capabilities. Each successive version becomes a functional superset of the previous version. PCL has become one of the most important data streams in the industry.

PCL1 Print and Space functionality are in the base set of functions which provide simple, convenient, single user workstation output. This base set includes:

- Basic command selection
- Limited raster graphics

PCL2 EDP (Electronic Data Processing)/Transaction functionality is a superset of PCL1. Functions were added for general purpose, multi-user system printing.

PCL 3 Office Word Processing functionality is a superset of PCL2. Functions were added for high-quality office document production.

- Font handling: Added more fonts to the printer in both orientations
- Page orientation: Portrait or landscape orientation
- Enhanced graphics with better resolution

PCL4 Page Formatting functionality is a superset of PCL3. These are the Functions added for the laser version of PCL4:

- Download fonts: Enable download fonts into printer memory
- New font sizes: Allows the printer to have point sizes from 5 to 30 points for a fixed pitch font.
- All points addressable capabilities
- Additional enhancements like gray shading, page formatting and box drawing.
- Enhanced graphics with better resolution

PCL5 Office Publishing functionality is a superset of PCL4. These Functions were added:

- Fonts scaling: Introduced scalable Agfa fonts
- Memory: Better memory management to allow more fonts per page
- HP-GL/2** command inclusion
- New graphics model with enhanced functions
- PJL language for data stream switching

PCL5C Color Printing support

PCL5 (LaserJet 4 level)** Desktop publishing enhanced: is a superset of PCL 5. Various functions were enhanced to support 600 dots per inch printing, additional Agfa fonts, TrueType** fonts and data stream switching. PJL language was enhanced to provide bidirectional printer communications.

Hewlett-Packard also has the HP-GL** (Hewlett-Packard Graphics Language). This language contains commands for placement and special drawing commands such as line, circle, or arc. Generally the virtual printer should be set to passthough when printing GL.

G.2.2 Proprinter Data Stream

The Proprinter data stream was used on the Epson ESC/P** printer which was a Personal Printer with the IBM logo. The evolution of this data stream made it an incorporated feature of Personal Printer Data Stream (PPDS) Level 1 and 2.

This data stream contains all Proprinter, QuietWriter, QuickWriter* and LaserPrinter 4019 and 4029 commands.

Level 1 Is the basic level of PPDS, providing the basic services needed by any printer.

Level 2 This level incorporates enhancements in the font selection, print quality selection and paper handling. This level is represented by the Quietwriter, Quickwriter family of products.

Level 3 Provides enhancements to the previous PPDS levels for page type printers, such as the IBM Laser Printer 4019. These enhancements allow you to place text and images at any position on the page (Cursor Positioning). It allows you to work with forms, overlays and repetitive command sequences (Save and Manage Macros). You can fill drawings with different patters (Rule and Fill). Finally you can change the orientation of the paper as desired.

Level 4 Adds new features to the IBM LaserPrinter 4029 and to the previous PPDS levels. These features includes compression and decompression (Raster image), scalable fonts (comprehensive font selection), and enhanced orientations (set print angle).

G.2.3 PostScript Data Stream

PostScript designed by Adobe is a hardware independent programming language for output devices. Postscript is designed for high quality output on different platforms.

PostScript Level 1 describes the basic Adobe PostScript set of functions:

- Stack oriented data stream: Level 1 was the first data stream having its own stack and programming language capabilities
- Scalable fonts: Level 1 introduced Adobe Type 1 and Type 3 outline fonts
- Smooth gray scaling: Level 1 introduced hardware independent gray scaling
- Multiple orientations on the physical page

Level 2 Enhances the base Level 1 by adding the following features:

- Forms: PostScript Level 2 allows you specify a set of operations that constitute a form, which may be cached
- Color: Level 2 adds more methods of specifying color, for example, index color and color separations
- Composite fonts: Unlimited character sets

G.3 Data Streams Supported by Print Services Facility/6000

Part of the function of PSF/6000 is to transform print job (input) data streams into printer (output) data streams for the supported PSF/6000 printers. This section describes these data streams:

- Input data streams
- Output data streams

G.3.1.1 Input Data Streams

PSF/6000 supports these input data streams:

AFPDS The Advanced Function Presentation Data Stream includes text and inline resources such as form definitions and page definitions used by PSF/6000 to construct the data stream that them points to the overlays, page segments, and fonts. This data stream is created on a variety of operating systems, such as MVS, VM, VSE, OS/400, OS/2 or DOS/Windows.

MO:DCA-P Mixed Object:Document Content Architecture for Presentation data stream, which is subset of the AFP data stream. The AFP Data Stream also includes the following objects:

- IOCA: Image Object Content Architecture is an architected collection of constructs used to interchange and present images
- GOCA: Graphic Object Content Architecture provides a collection of graphics values and control structures used to interchange and present graphics data
- BCOCA: Bar Code Object Content Architecure is a collection of contructs used to interchange and present bar codes

PostScript Level 1 and Level 2 You can create this type of data stream file by manually entering PostScript language commands or by using one of the many types of application programs that automatically generate PostScript.

ditroff This a data stream created by AIX troff formater

ASCII With or without Proprinter escape sequences

DBCS ASCII Double Byte Character Set for Japanese and Chinese (Traditional only)

EUC Extended UNIX Code files without escape sequences (formatting)

PCL Printer Control Language

S/370 line data 1403 line data (EBCDIC). This stream has no specific formatting instructions (communicated by means of escape sequences imbedded in the data stream), and it is characterized by lines of data separated by a carriage return at the end of each line.

G.3.1.2 Output Data Streams

PSF/6000 creates the following types of output data streams:

IBM IPDS Intelligent Print Data Stream is an all-points-addressable data stream that allows users to position text, images, and graphics at any defined point on a printed page.

IBM PPDS Personal Printer Data Stream

PCL4, PCL5, PCL5C Printer Contol Language Level 4, 5 and 5C (color)

G.4 Overview of Supported Data Streams for AIX and PSF/6000

In Figure 45 you can see the supported input data streams for AIX and PSF/6000.

In the case of AIX, every data stream will go to an specifc queue and from there to a specific physical printer. For example, a PostScript data stream has to be printed to the PostScript queue and it will be printed on a PostScript printer. The HP-GL can be printed to PCL queue under AIX. Under PSF/6000, using the PSF transform now included, GL can be driven to all of the output printers, including IPDS, PPDS, PCL4 and PCL5. In the figure you can see the input data streams supported for AIX. The arrows that point to PSF/6000 data streams indicate that the AIX data streams are supported as input data streams for PSF/6000.

In the case of PSF/6000 the input data stream will go to the PSF/6000 queue. The PSF/6000 will make all the required transformations to print the data stream in the supported data stream for the printer.

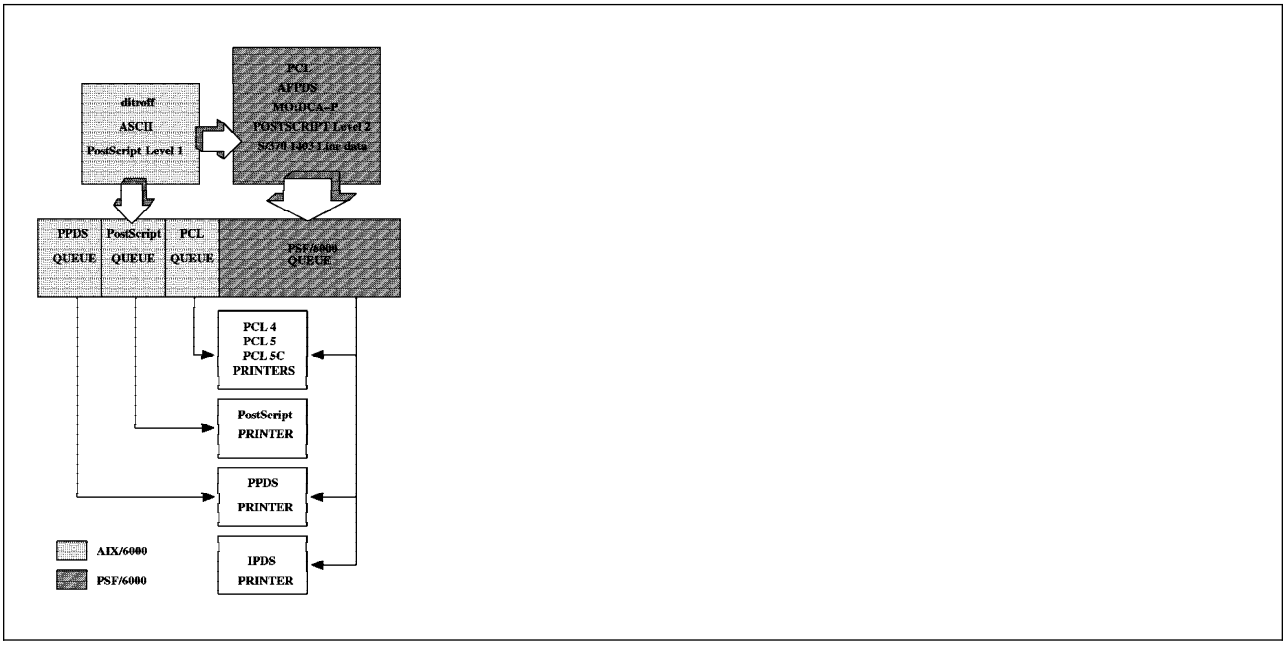

Figure 45. Overview of Supported Data Streams for AIX and PSF/6000

Appendix H. Printing Tips

In this appendix we include some tips that might be very helpful for you.

Note: All the these tips are tested under AIX V.3.2.5.

H.1 How does One Use a Single Queue for Both PostScript and ASCII?

This can be done with a PCL queue by making a few simple changes to the virtual printer definition. With this method the type of file is automatically sensed by the virtual printer and the commands are sent to the printer putting it in the appropriate mode. If the file begins with a %! then the datastream is changed to s which is postscript mode, and the appropriate filters are called to put the printer in postscript mode. If the %! is not detected at the start of the file, the file is considered ASCII and the datastream mode is set to a, and the appropriate filtering is done.

The attributes to change are as follows. This can be easily done by typing `lsvirprt` from the command line, selecting the appropriate PCL virtual printer, and issuing the following commands from the prompt:

mi=a,s This gives ASCII and PostScript

mp=,%%! This says anything but %! start will yield ASCII, %!=PS

_d=%lmi This gets the print data stream from the mi attribute. This automatically switches the _d attribute to the appropriate type of printer.

Another way to approach this is to convert all the data to postscript. This is easily done with the `enscript` command, but all people do not have this command. To print ASCII data to a postscript queue, simply issue:

```
# qprt -da -Pps_queue filename
```

Note: The pipeline in the virtual printer actually calls enscript, and this command will not work without it.

If the printer microcode is not at level 52.3 or higher, you may wish to contact Lexmark Technical Support at (606) 232-3000 to obtain this version, so the 4019 can dynamically switch between emulations.

If the printer hardware is at level 52.3 version of the Adobe Software, then to ensure that the printer will automatically switch modes, check the mZ attribute in the virtual printer. The mZ attribute in the virtual printer for the PostScript queue must be set to +. Use the following steps to set the mZ=+:

1. With root authority issue the following SMIT fastpath:

   ```
   # smit virprt
   ```

2. Select `Change/Show Characteristics of a Virtual printer`

© Copyright IBM Corp. 1991, 1994

3. Select the `PostScript` queue
4. At the To terminate, press Enter: prompt, enter `mZ=+`

H.2 How to Support any Native Typefont on the HP Laserjet III or IV (PCL)?

The following information is provided *AS IS* to suggest how to provide a capability not described in InfoExplorer, but that uses the standard features of the colon files (virtual printers) in AIX 3.2.

If you want to print with a gothic font at pitch 12 and be able to select this from the command line with the following command:

```
# qprt -sgothic -p15 -Pqueue
```

You will probably will get the following error message:

```
===> MESSAGE FROM PRINT JOB 28 (STDIN.5641) <=====
0782-529 No font is available for gothic 15 pitch.
         Check the values for the -s and -p flags.
<EOT>
```

To solve this problem, you have to change the mU attribute in the virutal printer to support the desired fonts, weights, and styles. Each allowable font is listed in this attribute like the following example:

```
courier[10,4099;0;0('%ImB')
```

The items in the description are as follows:

courier This is the name of the font to use with `qprt -sfontname`.

10 This is the allowable pitch. Make a separate entry in the mU attribute for each pitch desired.

4099 This is the TypeFace Family for the font.

0 This is the stroke weight (BOLD, etc).

0 This is the style parameter (Italic, etc).

%ImB Includes the code pages allowed for this font. If it is necessary to change this, it is likely you will also have to change c1, c2, or some other variable.

Examples of tested fonts:

```
gothic-bold[10,4102;3;0('%ImB')
gothic-bold[12,4102;3;0('%ImB')
gothic-bold[15,4102;3;0('%ImB')
times-italic[12,4101;0;1('%ImB')
```

H.2.1 How to Change the mU Attribute?

Enter the following command:

```
# lsvirprt

------------select the hplj queue to change ----------------------------
Enter number from list above (press Enter to terminate):  -> 12 (select)

     pclq            lp34    hplj-3si  (PCL)
To LIST attributes, enter AttributeName1 ... (* for all attributes)
To CHANGE an attribute value, enter AttributeName=NewValue
To FORMAT and EDIT an attribute value, enter AttributeName v
To EDIT the attribute file, enter  v
To terminate, press Enter:
--------------------------- Enter mU v  (mU-tilda-v) ------------------
```

The screen will now be a vi session and show:

```
Listing of allowable typeface/pitch combinations
mU = courier[10,4099;0;0(%ImB)]courier-bold[10,4099;3;0(%ImB)]courier-italic[10,
4099;0;1(%ImB)]courier[12,4099;0;0(%ImB)]courier[15,4099;0;0(%ImB)]lettergothic[
12,4098;0;0(%ImB)]courier-bold[12,4099;3;0(%ImB)]courier-italic[12,4099;0;1(%ImB
)]lineprinter[17,4096;0;0(%ImB)]courier[17,4099;0;0(%ImB)]

 'courier[10,4099;0;0('
 %ImB          INCLUDE: (List of Stage 2 Translate Tables (code pages)
               Supported by the Font)
 ')]courier-bold[10,4099;3;0('
 %ImB          INCLUDE: (List of Stage 2 Translate Tables (code pages)
               Supported by the Font)
```

Select one of the definitions lines starting with ')] and type `3yy` to yank 3 lines of text. Then change the name to the name you want to use and select the pitch, font, weight, and style you want.

```
 ')]gothic[15,4102;0;0('
 %ImB          INCLUDE: (List of Stage 2 Translate Tables (code pages)
               Supported by the Font)
```

When you are done hit Esc and :wq to save the changes. Exit the `lsvirprt` session, and you are ready to print. The `-p` option must match one of the values you have set up for your font.

Now enter the following command:

```
# qprt -sgothic -p15 -Ppclq filename
```

H.3 How to Use the PCL5 Overlay Capability with the 4039 Virtual Printer?

The IBM4039 printer has the ability to use downloaded macros to execute repeated actions. These actions might be to draw a logo on demand, to overlay a form or letterhead, or to put the printer in a special mode. If the 4039 has FLASH memory installed, then this macro can be stored in the printer and does not have to be downloaded with each job.

The key to this action is the PCL5 MACRO commands. These are:

esc & f # Y Set the macro ID number

esc & f 0 X Start a macro definition for last ID

esc & f 1 X Stop a macro definition for last ID

esc & f 2 X Execute the specified macro

esc & f 3 X Call the specified macro

esc & f 4 X Put the macro in automatic overlay mode

esc & f 5 X Disable automatic overlay mode

esc & f 6 X Delete all macros

esc & f 7 X Delete all temporary macros

esc & f 8 X Delete specified macro

esc & f 9 X Make macro temporary

esc & f 10 X Make macro permanent

The steps to place a macro in flash memory are to create a file with the download sequence and macro, then place the full path name of that file in the mF attribute for a 4039 virtual printer. It is best to use a separate download virtual printer because this file will be downloaded each time that the virtual printer is used. Print to this virtual printer and the file will be download.

H.3.1 Creating a File with the Overlay

Follow these steps:

1. Issue the command to enable download to flash memory:

   ```
   esc [ K x'03' x'00' x'06' x'c0' x'31'
   ```

2. Start the macro and give it an ID

   ```
   esc & f # y 0 X - for an id = # (replace with number
   ```

3. Insert the macro, or overlay
4. End the macro and make it permanent:

   ```
   esc & f 1 x 10 x
   ```

5. Issue the command to disable download to flash memory:

```
esc [ K x'03' x'00' x'06' x'c0' x'32'
```

6. Save the file, for our example use: /home/guest/overlay

H.3.2 Creating a Virtual Printer for Downloading the Overlay

Follow these steps:

1. Enter the following command:

```
#  mkvirprt
```

2. Select `Printer or Plotter Attached to Host` (1)
3. Select device, Such as lp2
4. Answer n to prompts about headers
5. Answer ! to ps
6. Answer ovrl for the pcl queue name

Now you have to change the virtual printer. To do this follow these steps:

1. Enter the following command:

```
# chvirprt -q ovrl -d lp2 -a "mF=/home/guest/overlay"
```

Note: If you don't have access to a binary or hex editor, it may be hard to put the x'00' value into your file. You can get the overlay into flash memory by changing the c1 attribute to the string.

c1=\33[K\03\00\06\300\61

2. Print the overlay as follows:

```
# qprt -P ovrl1 /home/guest/overlay
```

To print something to the virtual printer, do the following:

a. Enter `echo "Downloading" | qprt -P ovrl`

b. Check to see that the overlay has been downloaded, by using the operator panel as follows:

1) On the printer panel select Menus

2) Select Test Menus

3) Print directory

Note: The output should show something like this:

```
Optional Font Memory    Size 1048576 bytes      Page 1
          ID          TYPE             Size            Description
           2     PCL macro             164
                  1 files(s)           232 bytes used
                                         0 bytes unavailable
                                   1048344 bytes free
```

c. Make a virtual printer for printing as follows:

1) Enter the following command

```
# mkvirprt
```

2) Change the c1 attribute to automatic overlay using `ckvirprt -q aovr -d lp2 -a "c1=\33&f2y4X"`. The c1 attribute is sent to the printer after all the other initialization sequences (ci attribute).

3) If you print to the virtual printer, every page should conatain the overlay. For doing so, enter the following command:

```
#  qprt -P aovr anyfile
```

H.4 How to Format Locally for Remote Printing?

The `rembak` command as a backend does not format data. This is a problem with a number of situations such as the HP NetDirect card which is a network card with a built in lpd daemon. This could also be a problem with the IBM/Pennant 3930 printers network attach card which supports lpd protocol. It is also a frequent problem for PC attached printers where the PC does little or no formatting.

H.4.1 A Solution for This Problem

This solution uses the piojetd shell script as the model. It works by creating a virtual printer using the a shell script backend. Inside the script, /usr/lib/lpd/piobe is called to format the data. The output from piobe is piped to /bin/cat which places the formatted data in a file. The data is then sent to the remote host with /usr/lpd/rembak. Finally the temp file is removed so someone else can print to the queue.

This solution does not give you remote queue status because your local queue is calling rembak directly. You could actually set up a remote queue to get this status.

You must have root authority to perform these tasks.

Follow these steps:

1. Create a backend shell script. See H.5, “The remout Backend” on page 256 for more detail. One is needed for each remote system. For my example we have named the shell file: /usr/lib/lpd/pio/etc/remout
2. Give the shell script the correct permissions and ownership as follows:

```
# chmod +x /usr/lib/lpd/pio/etc/remout
# chown bin /usr/lib/lpd/pio/etc/remout
# chgrp printq /usr/lib/lpd/pio/etc/remout
```

Now you have to make a virtual printer, following these steps:

1. Enter the following command:

```
# mkvirprt
```

2. Select `Printer or Plotter Attached to Host`
3. Enter `null` for the device name
4. Select the printer and assign the queuename
5. Choose response for header and trailer pages
6. Choose a queue name for each queue, for example: remps for ps, rempcl for pcl, and so on.

You have to change the queue device for each virtual printer created to point to the special backend. To do so follow these stpes:

1. Enter the following command:

```
# smitty spooler
```

2. Select `Manage Local Printer Subsystem`
3. Select `Local Printer Queue Devices`
4. Select `Change/Show Characteristics of a Queue Device`
5. Choose the proper queue, then queue device:
6. Change the BACKEND PROGRAM pathname to /usr/lib/lpd/pio/etc/remout and press Enter.

Note: You will need to do the change for each queue.

Test the queue with the following commands:

```
# qprt -Prempcl /etc/motd
# qprt -Premps /usr/lib/lpd/pio/burst/H.ps
# qprt -z+ -Prempcl /etc/motd
```

H.5 The remout Backend

This is the listing of the remout backend.

```
#!/usr/bin/ksh
# /usr/lib/lpd/pio/etc/piorem   JWT, IBM 10/10/94
#
#   COMPONENT_NAME: Sample Code for Customers, No Warranty.
#
#   (C) COPYRIGHT International Business Machines Corp. 1993
#   All Rights Reserved
#   Licensed Materials - Property of IBM
#   US Government Users Restricted Rights - Use, duplication or
#   disclosure restricted by GSA ADP Schedule Contract with IBM Corp.
#
#   This is copied after the piojetd script.
#   Designed to do local formatting on data and then send it to a
#   remote host using a single queue.
#   Because we call piobe, we must set up a virtual printer.
#   Recommend using attach to local host, with device null
#   This may not work for some remote systems.

exec 1>/dev/null
trap "trap 15;kill -15 0;exit 0" 15
/usr/lib/lpd/piobe $* | cat > /tmp/rem.tmp
sleep 5

/usr/lpd/rembak -S e3print -P asc0 -N /usr/lib/lpd/aixshort /tmp/rem.tmp
# Explanation:
#        The -S option is the printer hostname, or tcp/ip address
#        The -P option is a queue name on that printer.
#        The -N option is the status return filter
if [ "$?" -ne 0 ]
then
        exit 64
fi
sleep 5
rm /tmp/rem.tmp

End of the shell script
```

Index

Numerics

16-port adapter 106
4033 LAN connection
  configuring a parallel printer 133
  configuring a serial printer 135
  connectivity 132
  description 131
  installing a printer 132
  installing the software 132
  supported models 132

A

administrative privilege 50
AFP
  what is 153
AIX V2
  compatability summary 201
AIX V4.1
  and PostScript 98
ASCII terminal connected printer
  configuring 79
  testing your printer 83

B

batch queue 49
Bibliography xix
bootp 165
  configuring 167
BSD
  compatability summary 201
BSD compatibility 31
burst pages 102

C

cable specifications 105
cables
  16-port async adapter 214
  8-port async adapter 213
  adapter to concentrator cable pinouts 217
  interposer pinouts 217
  native serial ports (S1 and S2) 213
  RJ45 to DB25 converter cable pinouts 218
  RS-232D asynchronous cable pinouts 216
  RS-422A asynchronous cable pinouts 216
  summary 213
cancel 43
chque 56
chquedev 66
chvirprt 8, 73
coaxial 165
command summary 198
compatibility
  AIX V2 summary 201
  BSD 31
  BSD summary 201
  overview 200
  System V 31
  System V summary 200
custom file 90

D

data stream
  figure with overview of supported 247
  PCL 244
  postscript 245
  proprinter 245
  supported by PSF/6000 246
  what is 243
Dataproducts LZR 2665 Laser Printer 105
ddi directory 8
default printer 45

E

enq 9, 35, 59
  relationship with q* commands 44

F

fastpaths for smit 211

H

header page 102
  customisation example 103
hints and tips 104
hosts.equiv file 115
hosts.lpd file 115
HP JetDirect card
  external JetDirect card 143
  HP JetDirect card 143
  integrated JetDirect card 146

I

i-data 7913 IPDS printer LAN attachment 165
  attaching 169
  configuration example 166
  configuring 170
  setup 169

© Copyright IBM Corp. 1991, 1994

IBM 3812 Model 2 Pageprinter 104
IBM 3816 Page Printer 104
IBM 3930-03D and 03S printer 152
IBM 4019 Laser Printer 104
IBM 4216 Personal Pageprinter, Model 031 104
IBM 5202 Quietwriter III 104
IBM 7318 serial communication network server 146
  configuring a parallel printer 149
  configuring model P10 147
INA
  description 139
  how it works 140
  installing a printer 140
  refid=irp.INA 139
  supported models 139
iptrace

L

list of supported printers 203
lpd daemon 115
  controlling via SMIT 116
  controlling via SRC 119
lprm 43
lptest 25
  printer device configuration screen
    serial printer 26
  SMIT configuration screen
    serial printer 26
lpx 92
lsallq 55
lsallqdev 66
lsattr 69
lsque 55
lsquedev 65
lsvirprt 8

M

Mannesman Tally 86 printer 87
Mannesman Tally 87 printer 91
messages to operator 106
messages to user 107
mklanprt 135
mkpq 52, 92
mkque 54
mkquedev 61

N

nonsupported printers
  an example 87, 91
  and device drivers 87
  configuration choice 86
  further customization 88
  pass-through printing 87
nonsupported printers *(continued)*
  tips 90

P

PCL 244
piobe 10
piodigest 73
piopredef 90
PostScript
  and AIX V3 98
  and TranScript 99
  datastream 245
  overview 98
PPFA/6000 155
print job
  cancelling 43
  cancelling remote job 128
  cancelling remote job with rembak 130
  figure of processing of 9
  files associated with 10
  listing status of 35
  prioritizing 41
  processing overview 8
  removing 43, 60
  starting of 31
print queue
  adding 52
  batch queue 49
  bringing up and down 59
  configuration approaches 51
  configuring a remote queue 120
  default queue stanza 47
  definition 6
  displaying configuration information 55
  listing status of 35
  modifying the configuration 56
  queue device stanza attributes 48
  queue stanza attributes 47
  queue stanza in qconfig file 47
  removing a job 60
  starting and stopping 59
  status of 36
  with two backends 48
print server
  configuring 122
  printing on 125
print spooling subsystem
  as a generic spooler 99
  associated files and programs 198
  command summary 198
  figure of 9
  messages from 106, 107
  overview 4, 6
  role of piobe 10
  role of rembak 10

print spooling subsystem *(continued)*
running C compile example 100
printer
ASCII terminal connected 79
cables 105
configuring nonsupported 86
connection to system 17
definition 6
example of installation 17
hints and tips 104
installation 17
move to another port 71
problem checklist 105
redirecting messages 107
removing 71
RS-232 cables 213
sending jobs to 31
supported 203
verifying correct output 25
printer device
installation of 18
SMIT configuration screen 24, 26
printer device driver
and nonsupported printers 87
configuring 5, 18
control of data stream 5
description of 5
displaying settings 68
example of configuration 18
figure of 5
overview 4
permanently changing attributes 71
printing via 5
removing 71
SMIT configuration screen 24, 26
temporarily changing attributes 70
transparent mode 6
PRINTER environment variable 45
printer queue device
adding 61
displaying configuration information 65
modifying 66
removing 67
stanza in qconfig file 48
status of 36
printing
an X-Window 108
associated files and programs 198
command summary 198
job processing overview 8
on remote hosts 125
PostScript 98
technical overview 4
via an Xstation 92
via device driver 4
via print spooling subsystem 4
printq administrative group 50
Printronix P9012 Line Printer 105
problem checklist 105
PSF/6000
bringing a PSF/6000 queue up/down 178
configuring
aix defined printer 159
S/370 channel emulator/a adapter attached printer 162
TCP/IP attached printer 170
connectivity 182
AIX 4.1 client 183
AS/400 client 192
MVS client 190
OS/2 2.11 client 194
SCS spooled file 193
VM client 189
description 153
directory path 156
printing
examples 175
using SMIT 172
using the command line 174
PSF direct component 195
removing a PSF/6000 queue 180
resources 155
supported data streams 154
supported environments 156
troubleshooting 181
PSF/6000 Printers Information 209
publications xix

Q

qadm 59
examples of use 59
qcan 43
examples of use 43
qchk 35, 36
examples of use 37
qconfig file
and remote printing 114
backend program 10
description of 45
examples of stanzas 48
figure of relationships 46
file 10
files associated with 10, 45
queue device stanza 10, 48
queue device stanza attributes 48
queue stanza 47
queue stanza attributes 47
stanzas for remote printing 114
qdaemon
overview 10
stanza in qconfig 10

qpri 41
qprt 31
qstatus 35
  listing status of
    example of 35

R

rembak 10, 113
  cancelling remote job with 130
  printer device configuration screen
    parallel printer 24
  SMIT configuration screen
    parallel printer 24
remote printing
  3930-03D and 03S printer 152
  4033 LAN connection 131
  6150 client 108
  cancelling a job 128
  cancelling job with rembak 130
  configuring 120
  configuring a remote host 122
  configuring a remote queue 120
  controlling lpd 116
  displaying job status 126
  figure of 112
  IBM 7318 serial communication network server 146
  iptrace 229
  lpd daemon 115
  problem checklist 105
  qconfig file 114
  rembak backend 113
  technical overview 111
  using 125
  using messages 106
rmque 60
rmquedev 67

S

S/370 channel emulator/a adapter 160
  &I2@S370.
    loading the device driver 161
  installing 161
  verifying attachment 163
SMIT
  chgprt 68
  chque 56
  fastpaths 211
  lpd 116
  mkhostslpd 123
  mkitab 123
  mkprt configuration screen 24
  mkque 52
  mkquedev 62
  mkrque 120
SMIT *(continued)*
  movprt 71
  printer 18
  printer device configuration screen 26
  qadm 59
  qcan 128
  qchk 36
  qpri 41
  qprt 31, 125
  rmvprt 71
splp 68
  example of use 70
supported printers, list of 203
System V
  compatability summary 200
System V compatibility 31
systems administration
  administrative privilege 50
  introduction 1
  issues printers pose 1
  knowledge required 3
  printer device configuration screen 24
  responsibility 3
  user v. administrative privilege 51
systems resource controller (SRC)
  and lpd 119

T

Texas Instruments OmniLaser 2115 Page Printer 104
trailer page 102
TranScript 99
transparent mode
  nonsupported printers 87
  piobe 10
  printer device driver 6
twinaxial 165

U

user v. administrative privilege 51

V

virtual printer
  adding 74
  and nonsupported printers 88
  and piobe 10
  colon file example 73
  colon file syntax 221
  creating a new predefined 89
  database 8
  ddi file example 73
  definition 6
  explanation of 6
  figure of 7

virtual printer *(continued)*
figure of database 72
files associated with 8, 73
formatter 221
formatter program 225
importance of 6
listing attributes 75
removing 77
technical overview 71

X

xpr 108
Xstation connected printer
configuring 92
overview 92
xwd 108