RS/6000 SP

Installation and Relocation

GA22-7441-05

RS/6000 SP

Installation and Relocation

GA22-7441-05

Note:
Before using this information and the product it supports, read the information in “Safety and environmental notices” on page xi and “Notices” on page C-1.

Sixth Edition (December 2002)

This book replaces GA22-7441-04.

IBM welcomes your comments. A form for readers’ comments may be provided at the back of this publication, or you may address your comments to the following address:

International Business Machines Corporation
Department 55JA, Mail Station P384
2455 South Road
Poughkeepsie, NY 12601-5400
United States of America

FAX (United States and Canada): 1+845+432-9405
FAX (Other Countries):
(Your international Access Code)+1+845+432+9405

IBMLink (United States customers only): IBMUSM10(MHVRCFS)
Internet e-mail: mhvrcfs@us.ibm.com

If you would like a reply, be sure to include your name, address, telephone number, or FAX number.

Make sure to include the following in your comment or note:
- Title and order number of this book
- Page number or topic related to your comment

When you send information to IBM, you grant IBM a nonexclusive right to use or distribute the information in any way it believes appropriate without incurring any obligation to you.

Contents

Figures

Tables

Safety and environmental notices

For general information concerning safety, refer to *Electrical Safety for IBM Customer Engineers*, S229-8124. For a copy of the publication, contact your IBM account representative or the IBM branch office serving your locality.

Safety notices

The following is a list of all safety notices (in English only) pertaining to SP hardware maintenance tasks from this and other RS/6000 SP hardware publications. Translations of each of the safety notices into other languages are included in *RS/6000 SP: Safety Information*.

DANGER notices warn you of conditions or procedures that can result in death or severe personal injury.

CAUTION notices warn you of conditions or procedures that can cause personal injury that is neither lethal nor extremely hazardous.

Each notice contains a reference number (*SPSFXXXX*) which you can use to help find a specific notice in other languages.

Danger notices

DANGER

Do not attempt to open the covers of the power supply. Power supplies are not serviceable and are to be replaced as a unit. (*SPSFD001*)

DANGER

An electrical outlet that is not correctly wired could place hazardous voltage on metal parts of the system or the devices that attach to the system. It is the responsibility of the customer to ensure that the outlet is correctly wired and grounded to prevent an electrical shock.

Before installing or removing signal cables, ensure that the power cables for the system unit and all attached devices are unplugged.

When adding or removing any additional devices to or from the system, ensure that the power cables for those devices are unplugged before the signal cables are connected. If possible, disconnect all power cables from the existing system before you add a device.

Use one hand, when possible, to connect or disconnect signal cables to prevent a possible shock from touching two surfaces with different electrical potentials.

During an electrical storm, do not connect cables for display stations, printers, telephones, or station protectors for communications lines. (*SPSFD002*)

DANGER

In the U.S., Canada, and Japan, this product has a 4-wire power cable with a 4-prong plug. Use this power cable with a correctly grounded power receptacle to prevent possible electric shock. (*SPSFD003*)

DANGER

Before you connect the power cable of this product to ac power, verify that the power receptacle is correctly grounded and has the correct voltage. (*SPSFD004*)

DANGER

During an electrical storm, do not connect or disconnect any cable that has a conductive outer surface or a conductive connector. (*SPSFD005*)

DANGER

Switch off power and unplug the machine power cable from the power receptacle, before removing or installing any part that is connected to primary power. (*SPSFD006*)

DANGER

To prevent possible electrical shock during machine installation, relocation, or reconfiguration, connect the primary power cable only after connecting all electrical signal cables. (*SPSFD007*)

DANGER

High voltage present. Perform ″Lockout safety procedures″ to remove primary power to the frame. (*SPSFD008*)

DANGER

High voltage present. Perform ″Lockout safety procedures″ to remove primary power to the frame (and high-voltage transformer if present). (*SPSFD009*)

DANGER

High voltage present at test points. Use high voltage test probes. (*SPSFD010*)

DANGER

High energy present. Do not short 48V to frame or 48VRtn. Shorting will result in system outage and possible physical injury. (*SPSFD011*)

DANGER

If a unique power module fails, all LEDs will be off. The high voltage LED will be off even though the high voltage is still present. (*SPSFD012*)

DANGER

The remaining steps of the procedure contain measurements that are taken with power on. Remember that hazardous voltages are present. (*SPSFD013*)

DANGER

The frame main circuit breaker and the controller must not be switched on again now.

Before disconnecting the power cables from the power receptacles, ensure that the customer's branch distribution circuit breakers (customer power source circuit breakers) are Off and tagged with DO NOT OPERATE tags, S229-0237. Refer to "Lockout safety procedures" in *RS/6000 SP: System Service Guide*, before proceeding. (*SPSFD014*)

DANGER

Before connecting ac power cables to electrical outlets, ensure that:

- **The customer's branch distribution circuit breakers (customer power source circuit breakers) are off and tagged with DO NOT OPERATE tags, S229-0237 (or national language equivalent).**
- **The activities in ″Performing the Customer 50/60 Hz Power Receptacle Safety Check″ have been performed on all customer power source outlets and cable connectors. (*SPSFD015*)**

DANGER

Ensure that the customer's branch distribution circuit breakers (customer power source circuit breakers) to the ac power outlets are off and tagged with DO NOT OPERATE tags, S229-0237 (or national language equivalent). (*SPSFD016*)

DANGER

Both the SEPBU power chassis and the PDU 48 V dc power chassis are field replaceable units (FRUs) which contain NO serviceable parts; they are labeled as such. Do not attempt to isolate or repair these components, since doing so may result in severe injury or even death. (*SPSFD017*)

Caution notices

CAUTION:

The weight of the PDU assembly, 48 V dc power chassis, and the SEPBU power chassis is greater than 18 Kg (40 lbs). Be careful when removing or installing. Remove all 48 V dc power supplies from the power chassis before removing or installing the power chassis. (*SPSFC001*)

CAUTION:

The unit weight exceeds 18 Kg (40 lbs) and requires two service personnel to lift. (*SPSFC002*)

CAUTION:

The covers are to be closed at all times except for service by trained service personnel. (*SPSFC003*)

CAUTION:

When the unit is being serviced, the covers should not be left off or opened while the machine is running unattended. (*SPSFC004*)

CAUTION:

Due to weight of each thin node (under 18 Kg [40 lbs]), use care when removing and replacing thin nodes above shoulder height. (*SPSFC005*)

CAUTION:

The wide node weight may exceed 32 Kg (70.5 lbs). (*SPSFC006*)

CAUTION:

Do not open more than one wide node or switch assembly drawer at a time. (*SPSFC007*)

CAUTION:

Make sure the stability foot and wheel chocks are installed on the frame. These are required to maintain frame balance and position during service operations. (*SPSFC008*)

CAUTION:

Outer edges of chassis may be sharp. Care must be taken when removing and installing chassis. (*SPSFC009*)

CAUTION:

The ground strip may have sharp edges. (*SPSFC010*)

CAUTION:

Do not remove wide nodes or switch assemblies from the mounting slides. Caution must be observed when working with mounting slides to prevent pinched fingers or accidental release of the unit. (*SPSFC011*)

CAUTION:

Do not remove the drawer case mounting screws at the bottom of both sides. (*SPSFC012*)

CAUTION:

Once the latch is released, push the drawer closed. Do not pull, as the drawer may disengage from the rails, creating a safety hazard. (*SPSFC013*)

CAUTION:

Due to the weight of each wide node, use care when sliding and closing wide processor nodes above shoulder height. (*SPSFC014*)

CAUTION:

- **When moving frames into position, team members should work together. Using one person on each corner of the frame can prevent strain.**
- **In raised floor installations, mechanically safe moldings should be installed around floor cutouts. Extreme caution should be used when moving frames during installation or removal because of the proximity of floor cutouts to casters. (*SPSFC015*)**

CAUTION:

When using step ladder or step stool, be sure that the work surface is level and the step ladder or step stool is in good working order. (*SPSFC016*)

CAUTION:

Portable ladders present a serious safety hazard if not used properly. Follow these general guidelines:

- **Make sure the ladder is firm and steady, and has no defective rungs or braces.**
- **Work only on a level surface.**
- **Never use a metal ladder near electrical power lines.**
- **Never overreach. Instead, move the ladder.**

Be as careful on a short ladder as on a 30-foot extension ladder. False security can lead to carelessness and falls which can cause painful injuries. (*SPSFC017*)

CAUTION:

All IBM laser modules are designed so that there is never any human access to laser radiation above a class 1 level during normal operation, user maintenance, or prescribed service conditions. Data processing environments can contain equipment transmitting on system links with laser modules that operate at greater than class 1 power levels. For this reason, never look into the end of an optical fiber cable or open receptacle. Only trained service personnel should perform the inspection or repair of optical fiber cable assemblies and receptacles. (*SPSFC018*)

Laser safety information

The RS/6000 SP might contain certain communication adaptors, such as ESCON or FDDI, which are fiber optic based and use lasers.

Laser Compliance

All lasers are certified in the U.S. to conform to the requirements of DHHS 21 CFR Subchapter J for class 1 laser products. Outside the U.S., they are certified to be in compliance with the IEC 825 (first edition 1984) as a class 1 laser product. Consult the label on each part for laser certification numbers and approval information.

Environmental notices

Product recycling and disposal

This product contains materials such as circuit boards, cables, electromagnetic compatibility gaskets, and connectors which might contain lead and copper/beryllium alloys that require special handling and disposal at end of life. Before this unit is disposed of, these materials must be removed and recycled or discarded according to applicable regulations. IBM offers product return programs in several countries. You can find country-specific instructions at www.ibm.com/ibm/environment/products/prp.phtml.

This product might contain nickel-cadmium or lithium batteries in communication adapters. The batteries must be recycled or disposed of properly. Recycling facilities might not be available in your area. In the United States, IBM has established a collection process for reuse, recycling, or proper disposal of used sealed lead-acid, nickel-cadmium and nickel metal hydride batteries and battery packs from IBM equipment. For information on proper disposal of batteries in this product, please contact IBM at 1-800-426-4333. For information on disposal of batteries outside the United States, contact your local waste disposal or recycling facility.

About this book

This book is part of the RS/6000® SP™ hardware service library. Use this book to assist you in performing the following tasks:

- RS/6000 SP system installation and relocation procedures
- SP system verification
- Maintenance agreement inspections and qualifications

If you are attempting to isolate an SP system failure, use the Maintenance Analysis Procedures (MAPs) beginning with the Start MAP in *RS/6000 SP: System Service Guide*. For a listing of the complete RS/6000 SP hardware service library, see "Related information".

Who should use this book

This book is intended for RS/6000 SP product-trained service personnel.

Related information

The following books make up the complete RS/6000 SP hardware service library:

- *RS/6000 SP: Safety Information*, GA22-7467. Safety notices, in English and translated into other national languages, which are compiled from all the books in the library.
- *RS/6000 SP: Installation and Relocation*, GA22-7441 (this book).
- *RS/6000 SP: System Service Guide*, GA22-7442. General SP system service procedures, the system Start MAP, and MAPs and parts catalog for the frames and power subsystems. Use this book to begin a diagnostic procedure to isolate a problem to a specific major component of the SP system.
- *RS/6000 SP: SP Switch Service Guide*, GA22-7443. Service procedures, MAPs, and parts catalog information specific to the SP Switch.
- *RS/6000 SP: SP Switch2 Service Guide*, GA22-7444. Service procedures, MAPs, and parts catalog information specific to the SP Switch2.
- *RS/6000 SP: Uniprocessor Thin and Wide Node Service Guide*, GA22-7445. Service procedures, MAPs, and parts catalog information specific to all uniprocessor-type nodes.
- *RS/6000 SP: 604 and 604e SMP High Node Service Guide*, GA22-7446. Service procedures, MAPs, and parts catalog information specific to these nodes.
- *RS/6000 SP: SMP Thin and Wide Node Service Guide*, GA22-7447. Service procedures, MAPs, and parts catalog information specific to these nodes.
- *RS/6000 SP: POWER3 SMP High Node Service Guide*, GA22-7448. Service procedures, MAPs, and parts catalog information specific to this node.

This book and other RS/6000 SP hardware and software documentation are available both on-line and, for some books, in printed form from the following sources:

- The Web site at **http://www.ibm.com/servers/eserver/pseries/library/sp_books/index.html**
- The Resource Center on the PSSP product media
- Printed and CD-ROM versions (which can be ordered from IBM)

For more information on these sources and an extensive listing of RS/6000 SP related publications, see “Bibliography” on page E-1.

How to send your comments

Your feedback is important in helping to provide the most accurate and highest quality information. If you have any comments about this book or any other RS/6000 SP documentation:

- Send your comments by e-mail to **mhvrcfs@us.ibm.com**. Be sure to include the name of the book, the order number of the book, and, if applicable, the specific location of the text you are commenting on (for example, a page number or table number).
- Fill out one of the forms at the back of this book and return it by mail, by fax, or by giving it to an IBM representative.

Summary of changes

GA22-7441-05

This edition replaces GA22-7741-04. Changes since the last edition include:

- Added M/T 7028 and 7039 installation information

GA22-7441-04

This edition replaces GA22-7741-03. Changes since the last edition include:

- Added M/T 7040 installing information

GA22-7441-03

This edition replaces GA22-7741-02. Changes since the last edition include:

- Added SP Switch2 two-plane cabling information
- Added Electronic Service Agent™ information

Chapter 1. Installation procedures

Use this chapter to physically install an RS/6000 SP system. These tasks assume that the planning steps outlined in *RS/6000 SP: Planning Volume 1, Hardware and Physical Environment* and *Planning Volume 2, Control Workstation and Software Environment* are completed.

Installing the control workstation and enabling Electronic Service Agent or Service Director

Control workstation

Installation of the control workstation is required for the SP system to be fully functional. Service Code 20 complete cannot be claimed until the control workstation is completely installed and functional. Diagnostics must complete successfully and the control workstation must be physically attached to the SP system.

Electronic Service Agent and Service Director

Electronic Service Agent and Service Director™ registration is critical to IBM®; it is required to improve customer support. These applications automatically report hardware problems to IBM support and aid in problem determination through error analysis.

To install the modem for Electronic Service Agent or Service Director, the customer must provide a serial port on the control workstation (or any pSeries™ or RS/6000 workstation on the network) and a dial-up, analog telephone line (public switched network). The modem, its cable, and a copy of *Electronic Service Agent for pSeries and RS/6000 User's Guide*, SC38-7105 or *Service Director for RS/6000 Information Guide*, SA38-0383 are included in the ship group. Install the modem and register Electronic Service Agent or Service Director using the instructions provided in the guide.

Service Code 20 complete should not be claimed for any installation until Electronic Service Agent or Service Director is installed and registered.

Beginning the installation

Table 1-1. Installation task checklist

Step	Section
__1	**"Pre-installation tasks for RS/6000 SP components" on page 1-2** Tasks that can be performed when the RS/6000 SP system has arrived but before the physical installation begins. These tasks verify that the site is ready for the installation and everything required for a successful installation is available.
__2	**"Performing the 50/60-Hz power receptacle safety check" on page 1-5** Information to help you verify the input power and grounding (earthing).
__3	**"Installation tasks" on page 1-8** These tasks end in the completion of the physical placement of the RS/6000 SP frame.

Table 1-1. Installation task checklist (continued)

Step	Section	
__4	**“Installing the high-voltage transformer feature” on page 1-19** These tasks help you cable the high-voltage transformer feature. (For 380-415 V ac with PDU only.)	
__5	**“Installing ac power cables and system interconnecting cables” on page 1-20** Step-by-step tasks for routing all cables (raised and non-raised floor applications).	
__6	**“Installing skirts, frame covers, and main power switch” on page 1-28** Instructions for installing frame hardware. This is done after cable routing to reduce interference.	
__7	**“Performing RS/6000 SP System power-on and verification” on page 1-30** Information on the initial setup of the hardware and verifying the RS/6000 SP system using either a preloaded install tool image, CE Installation Aid, or the customer hardware.	
__8	**“Connecting RS-232 and Ethernet LAN cables” on page 1-43** Information for connecting the RS-232 and Ethernet cables from the RS/6000 SP frame to the customer’s hardware.	
__9	**“Installing the high availability control workstation (HACWS)” on page 1-46** This section helps you install the optional High Availability Control Workstation (HACWS).	
__10	**“Reconfiguring Ethernet LANs” on page 1-47** Information to help you install RF shunt assemblies if a customer needs to reconfigure their Ethernet LANs.	
__11	**“Attaching the 9077 SP Switch Router” on page 1-48** Perform the procedure, ″Installing GRF Hardware for use as an SP Dependent Node″ in the *SP Switch Router Adapter Guide.*	
__12	**“RS/6000 SP power control interface function” on page 1-48** This section discusses the power control interface card on the SEPBU power unit.	
__13	**“Post-installation tasks” on page 1-49** These tasks include safety check, cleanup, and acquisition of system Vital Product Data (VPD). The last task requires interaction with a functional system.	
End	Signature:	Date/Time:
Note: Repeat the pre-installation and installation tasks to install additional frames.		

Pre-installation tasks for RS/6000 SP components

Pre-installation reminders

Be especially concerned for the personal safety of all team members and the following very real installation safety exposures:

- Frames tipping while being positioned over floor cutouts
- Shock hazard during initial power-on if a power connector or cable is not wired correctly

- Fingers wedged between frames and covers

Doorway clearance considerations

Outside of the shipping container, the current tall SP frame is 1.93 m (75.8 in.) in height and 749 mm (29.5 in.) wide without the side covers. Older tall SP frames are 2.01 m (79 in.) in height and 711 mm (28 in.) wide (without the side covers). All short SP frames are 1.25 m (49 in.) in height and 711 mm (28 in.) wide. ***Make certain*** that the SP frames can clear all doorways or other obstructions between the receiving dock and their final setup location.

If there are height or width restrictions, the customer must contact a commercial mover to move the SP through the doorway or past the obstruction. A fully populated SP frame can weigh 984 kg (2165 lbs.); proper consideration must be given to the mass of the frames and the fragile nature of electronic equipment.

Return instructions for wooden shipping containers

Note: In the U.S.A. these instructions conform with **Instruction P/N 7334490**. The unpacking and packing instructions are included in the event that the containers are still at the customer site.

The wooden shipping containers are returnable, from U.S.A. addresses only, for reuse. Outside the U.S.A., dispose of the containers according to local procedures. Upon completion of delivery and unpacking of the containers at their final destination, the following steps should be taken to return the containers:

1. Ensure the containers are empty of any machine-related components. However, container components such as ramps and supports should be placed in the bottom of the container.
2. Secure front and rear doors with Klimp fasteners.
3. From locations within the U.S.A. only, return the container to the following address (found on the ARBO box label):
   Atlantic Metal Products
   21 Fadem Road
   Springfield, New Jersey 07081
   Attn: B. Santoriello

   Ship containers via common carrier (based on consolidation center location).
4. Bill charges to the third-party listed below:
   IBM-922
   STI
   P.O. Box 4093
   Iselin, NJ 08830

Installer responsibilities

These tasks, normally the responsibility of the CE , should be done after the frame arrives, but before beginning the physical installation:

1. Check with the System Engineer to determine whether to order the RS/6000 SP CE Installation Aid. Use of the CE Installation Aid laptop is optional and is intended only for MES installs when frames are added to an existing SP system. For details, refer to “Ordering the RS/6000 SP CE Installation Aid kit” on page 1-4.
   - If you have not already done so, open or update a PMH for this installation.
2. Put the shipping group packing lists in front of this manual.

3. If an Exception Letter accompanies the system, read it, mark changes to this manual, if necessary, then file the Exception Letter with this manual.

   Note: The Exception Letter and Configuration Data are packaged in a gray envelope.
4. Review the Configuration Data to ensure that you have received the proper frame configurations.
5. Review this manual before the start of the installation.
6. Check that all system frames have been completely unpacked and inventoried against the shipping group bill of materials and the customer's order.
7. Check that the installation planning representative (IPR) has verified that the site is correctly prepared and that all facilities are available for the successful installation of this system.
8. Review any available pre-installation checklists (see *IBM System/360, System/370, 9300, 9370, and ES/9000 Processor Input/Output Equipment Installation Manual — Physical Planning*, GC22-7064 and *Systems Assurance Process Review* (available from Systems Assurance Advisor [SAADVISOR in HONE], SA93-017.
9. Take an inventory of all of the RS/6000 SP shipping groups and compare it to each shipping group bill of material before beginning the installation.

   Note: Report any missing cables or hardware to the team leader so that a replacement part can be obtained before the physical installation begins.
10. Check the "Standard Ship Group" listed in *RS/6000 SP: System Service Guide*.

Ordering the RS/6000 SP CE Installation Aid kit

The RS/6000 SP CE Installation Aid contains a portable computer with preconfigured software, allowing the frame hardware to be verified without the customer-supplied control workstation. It should be ordered prior to beginning the physical installation.

The Account Team/CE should contact the support center approximately 1 week prior to the scheduled install date.

- In U.S.A, contact the Poughkeepsie LSSC, telephone number 1-800-426-2472, entering "9076" for machine type. The LSSC will open a RETAIN® PMH to keep track of the installation kit location. The kit will then be shipped overnight delivery to the address requested by the CE.
- In EMEA and world trade, contact the country support center. There is a coordinator in each country support center responsible for shipping the RS/6000 SP CE Install Aid to the install location.

When the Account Team/CE receives the installation kit, the portable computer should be turned on to verify that it is functional.

After installation is completed, SC20 CIA=1, the installation kit must be returned as soon as possible for reuse on future installs. Please ensure all contents received in the kit are included in the return.

Note: The customer-supplied control workstation can be used by the CE to run the diagnostics to verify the RS/6000 SP hardware is operating correctly after

installation; however, this requires that the RS/6000 SP system support programs be installed and configured before verification of the RS/6000 SP hardware.

Performing the 50/60-Hz power receptacle safety check

Note: Refer to *RS/6000 SP: Planning Volume 1, Hardware and Physical Environment* for power requirements and phase information.

The 50/60-Hz power receptacle safety check contains the procedures you follow when a customer power cable receptacle is used for the first time or if you doubt that a cable receptacle is wired correctly. You must do this power receptacle safety check procedure for a new machine installation or when a machine is relocated and a new power receptacle is used. Refer to *Electrical Safety for IBM Customer Engineers* (S229-8124), for additional information.

1. Read the whole procedure before starting the power receptacle safety check.
2. Remain alert and use all possible safety precautions.

Check with the customer or the IBM installation planning representative to locate a reliable building ground (earth), such as an electrical conduit, a water pipe, or another correctly grounded (earthed) IBM machine. For your safety, use an IBM-approved tester with insulated test probes that can measure ac voltage and ac impedance.

If any problems are encountered at a procedure step, switch off primary power, stop the installation, and notify the customer. When the customer has corrected the problem, ***repeat*** the power receptacle safety check and perform the procedures described in the following section.

50/60-Hz power receptacle safety check procedure (200-240, 380-415 V ac)

Have the customer locate the branch distribution circuit breakers that supply the processor unit 50/60-Hz power receptacle.

DANGER

Ensure that the customer's branch distribution circuit breakers (customer power source circuit breakers) to the ac power outlets are off and tagged with DO NOT OPERATE tags, S229-0237 (or national language equivalent).

1. Set the tester to the highest ac voltage range. Using the pair of high-voltage test probe tips (part number 93F2731), check for 0 volts ac between the building ground (earth), such as any grounded metal structure, water pipe, or building steel, and the three receptacle voltage contacts and the receptacle ground (earth) contact.

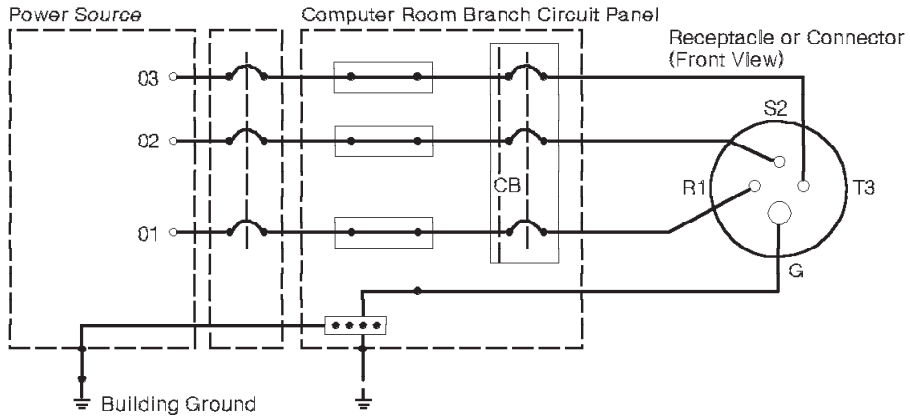

Figure 1-1. Example three-phase power wiring

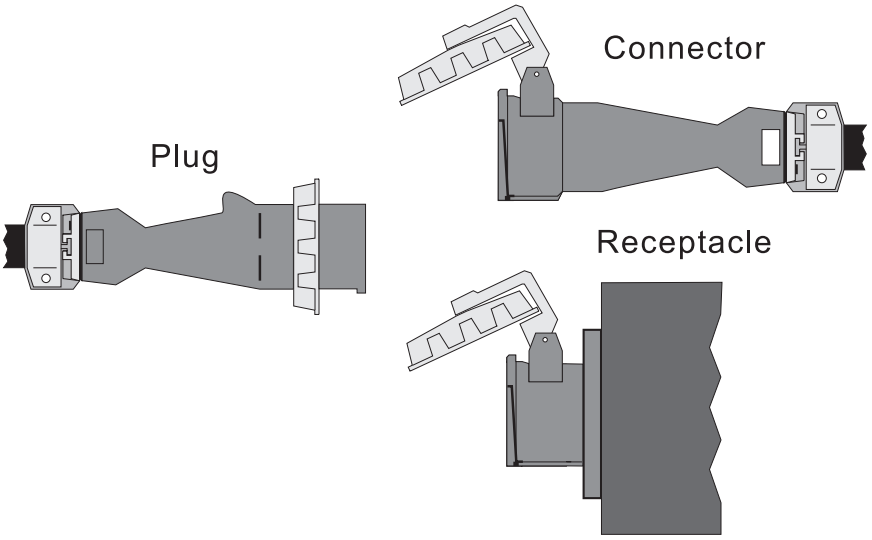

Figure 1-2. Three-phase power connectors (U.S.)

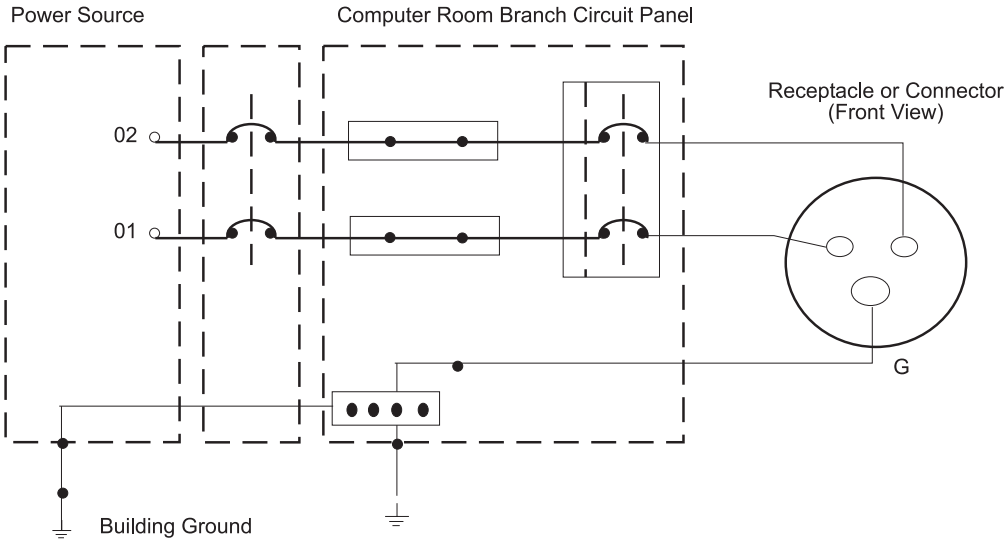

Figure 1-3. Example single-phase power wiring

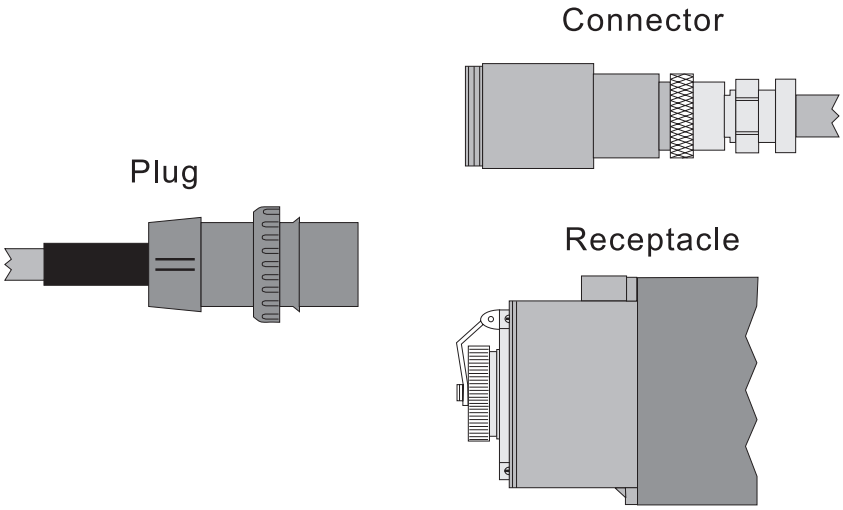

Figure 1-4. Single-phase power connectors (U.S.)

2. Set the tester to the R x 1 range and zero the tester. You must read a resistance of 1 ohm or less between the building ground and the receptacle ground contact. If the reading is greater than 1 ohm, confirm the following:
   - That you did not use a digital multimeter (the result could be inaccurate)
   - That you used an IBM-approved tester that can measure ac voltage and impedance
   - That you tried a second building ground reference

   If you cannot get a ground reading of 1 ohm or less, inform the customer.
3. Set the tester to the highest ac voltage range. Connect the tester leads between the building ground and the connector ground contact. Leave the tester leads connected.

DANGER

The remaining steps of the procedure contain measurements that are taken with power on. Remember that hazardous voltages are present.

Note: Ask the customer to switch on and switch off the power source circuit breaker in the steps that follow.

4. Switch on the power source circuit breaker and check for 0 volts between the building ground and the receptacle ground contact.
5. With the power source circuit breaker still on, ensure that line voltage for phase-to-ground (100v-400v) is present. Repeat for the other two voltage contacts.

   Note: In some conditions (for example, an impedance-grounded neutral system), the voltage contact selected might be grounded. If this occurs, repeat this step with another voltage contact.
6. Perform “Lockout Procedures” in *RS/6000 SP: System Service Guide*, Chapter 1, to remove power to the frame.

Installation tasks

Attention: Do not use a Johnson bar (J-bar) or similar device at any time to lift or move frames.

Before you install the RS/6000 SP frame, perform the following tasks in the order listed:

1. “Installing frame side covers” on page 1-9
2. “Placing the frames into position” on page 1-11
3. “Installing the stability foot and wheel chocks” on page 1-16
4. “Installing frame tie-down hardware” on page 1-17

Notes

- If frame position is not critical, frame installation can be done at a later time in the overall installation procedure.
- Frame tie-down hardware is not used in all installations. Check with the customer.

Keep a record of the following items during installation:

1. The time it takes to do the physical portion of the installation
2. Any problems that occur during the physical portion of the installation and the time it takes to solve each problem
3. The time it takes to run the machine diagnostics
4. Any problems that occur during the initial power-on sequence and machine diagnostics and the time it takes to solve each problem

Note: Once the physical portion of the installation is complete for an individual frame, the verification of that frame can be done concurrently with the installation of any additional frames.

Installing frame side covers

The 1.93 and 1.25 m frames are shipped with side covers installed. Use the following procedure to install side covers on a 2.01 m frame:

Notes

- The manufacturing process has incorporated the cover bottom rail into the side cover. On later production covers, skip Step 1 and Step 4.
- If you are installing a 1.25 m frame, go to “Placing the frames into position” on page 1-11.

1. If this frame has separate side cover bottom rails, remove or loosen the screws retaining the side cover bottom rails on the two sides of the frame. These mounting rails are approximately 33 cm (13 in.) from the bottom of the frame.
2. Place the two side covers against the two sides of the frame so that the beveled edge of each cover is toward the front of the frame and the mounting flange is at the bottom. This determines orientation of the side covers for the following steps.
3. Install side cover by hooking top flange of cover on side cover mounting rail so that front inner edge of the cover aligns with front frame edge. Pull cover down so that the top is even with the frame top.
4. If this frame has separate side cover bottom rails, install two screws to hold each side cover bottom rail to the side cover rail.
5. Install and tighten screws (**P/N 54G2882**) to hold each side cover bottom rail to the frame.
6. If this is a multi-switch frame (F/C 2030/1), install side skirts (see “Installing skirts, frame covers, and main power switch” on page 1-28). (It’s easier to do it now before the frame extension is installed.)

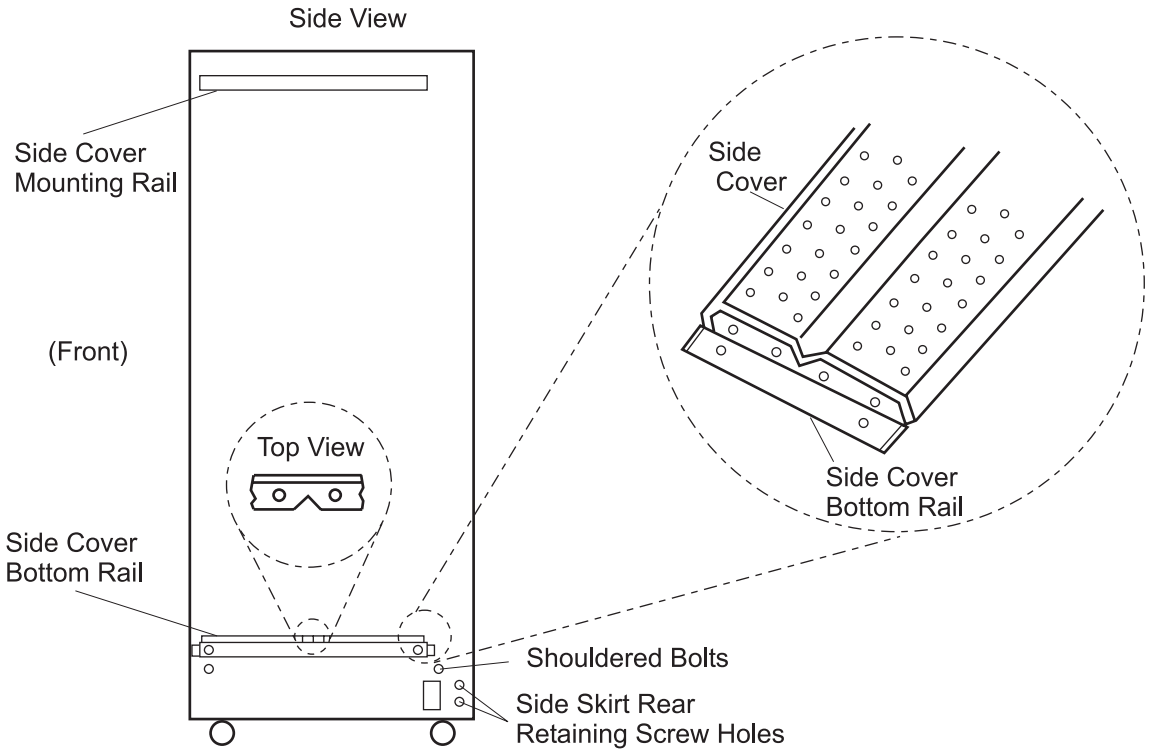

Figure 1-5. Installing side cover rails

Installing switch frames (F/C 2031, 2032)

The following procedure describes how to install the frame extension hardware for a multi-switch frame:

1. Ensure that there is enough clear space behind the multi-switch frame to position the frame extension behind the multi-switch frame. The recommended clearance is 4 feet wide by 8 feet deep.
2. Remove both cable raceway assemblies from the frame extension by removing two nuts at bottom and two nuts at top of each raceway assembly.
3. Adjust the two feet on the frame extension to match the required height of the bottom of the frame from the floor.
4. Position the frame extension horizontally behind the multi-switch frame with the feet toward the frame and closest to the floor.
5. Align the frame extension so that each frame extension foot is about 12-18 inches behind the wheels of the frame.
6. Lift the frame extension at the end farthest from the frame and tilt the frame extension until it is even with the rest of the frame. Make any minor adjustments (adjust height using feet) to align bolt holes on the junction between the frame extension and the frame.
7. Install bolts through the holes from the frame extension side. Do not tighten until all bolts are installed.
8. Tighten bolts and recheck frame extension feet for any last adjustments.
9. Reinstall both cable raceway assemblies in the frame, reinstalling two nuts at top and two nuts at bottom of each raceway assembly.

Placing the frames into position

Attention: Do not use a Johnson bar (J-bar) or similar device at any time to lift or move frames.

CAUTION:

- **When you move frames into position, team members should work together. Use one person on each corner of the frame to prevent strain.**
- **In raised floor installations, mechanically safe moldings should be installed around floor cutouts. Use extreme caution when moving frames during installation or removal because of the proximity of floor cutouts to casters.**

1. Using the customer's floor layout diagram generated from the *RS/6000 SP: Planning Volume 1, Hardware and Physical Environment*, place frames near their final locations.
2. Install frame jumper/ground cables as follows:
   a. SP-attached server: Route the ground strap (P/N 08J6118) to the ground bus bar on the bottom of the SP-attached server as shown in Figure 1-6 on page 1-12.
   b. All other SP frames: Install the ground strap (P/N 46G5695) between each adjacent frame through the closest exit hole and fasten to the nutclip on the EIA rail, as shown in Figure 1-7 on page 1-13.
3. Position the power cable near the customer's ac outlet or high-voltage transformer location.

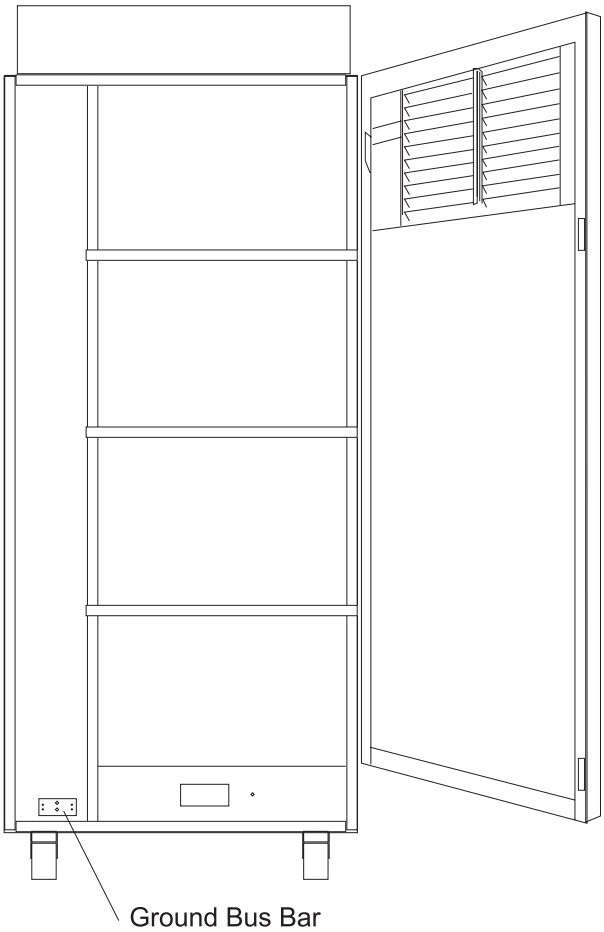

Figure 1-6. Installing frame jumper/ground cable between an SP-attached server and an SP frame

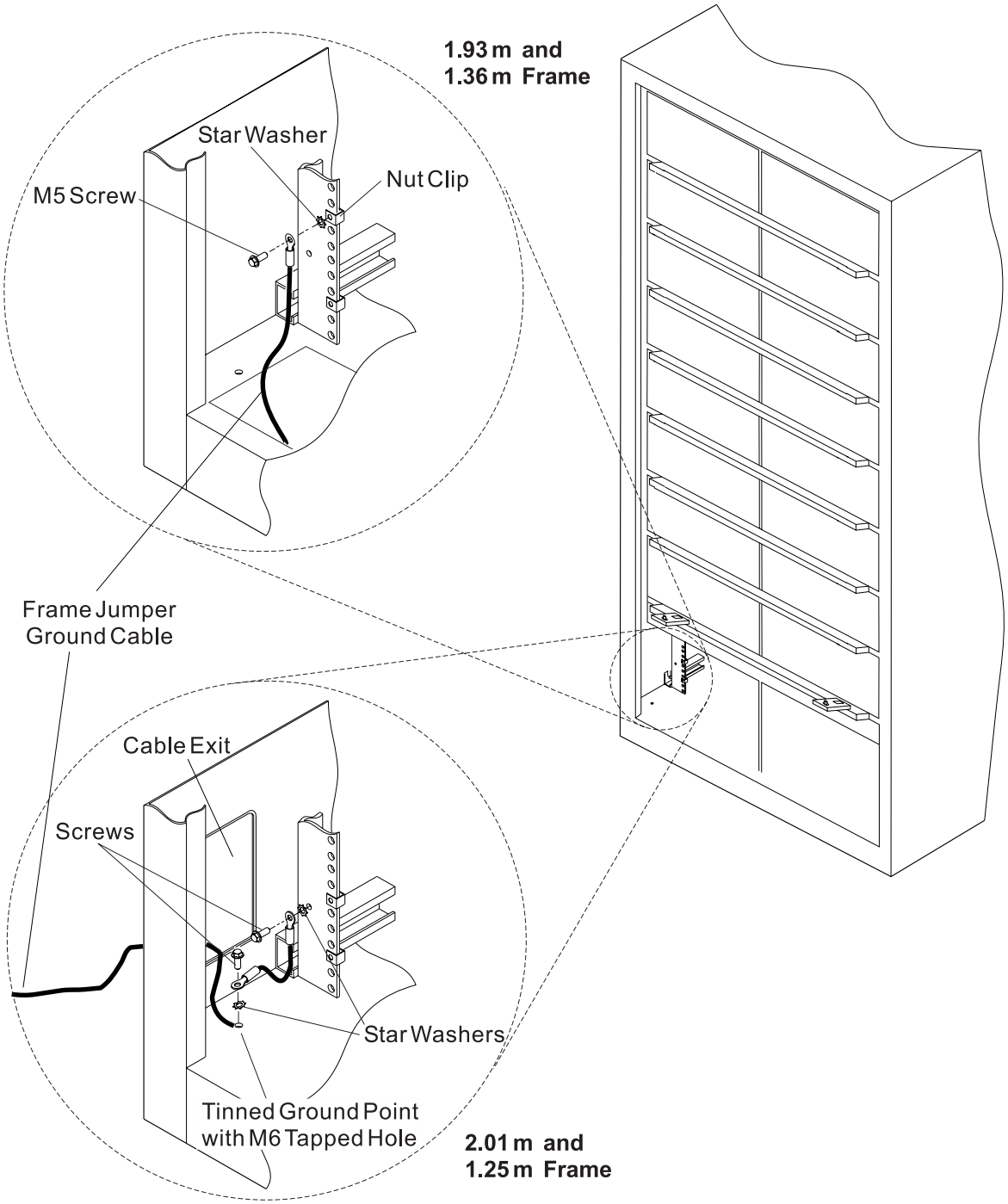

Figure 1-7. Installing frame jumper/ground cable between SP frames

Frame footprint cut-away illustrations

Cut-away view of the 1.93 m frame

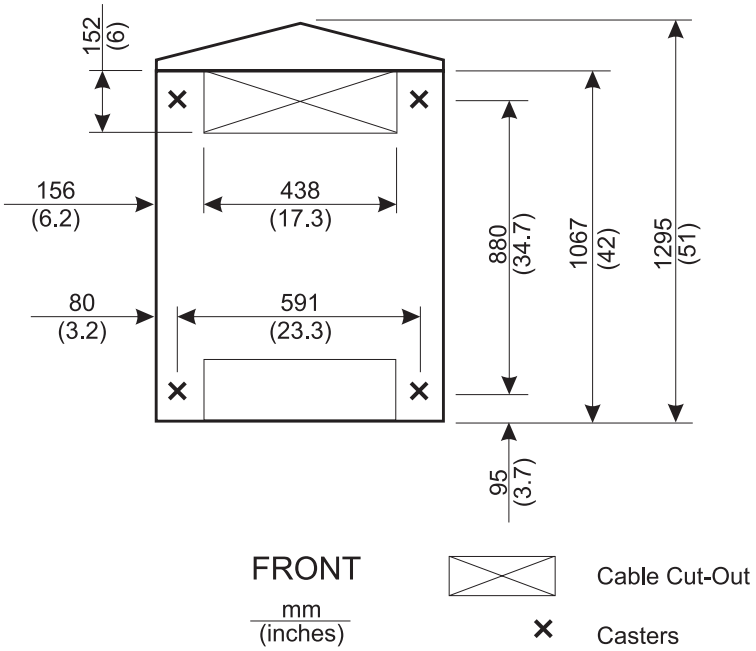

Figure 1-8. Cut-away view of the 1.93 m frame. Locations of the casters, ac power cable, and input/output cable egress on the base of the 1.93 m frame. Dimensions are shown in mm (in.).

Notes:

1. Front cut-out location is not used
2. Leveling pads have been replaced with wheel chocks on 1.93 m frame.
3. Frame outline is shown without covers.

Cut-away view of the 1.25 m frame

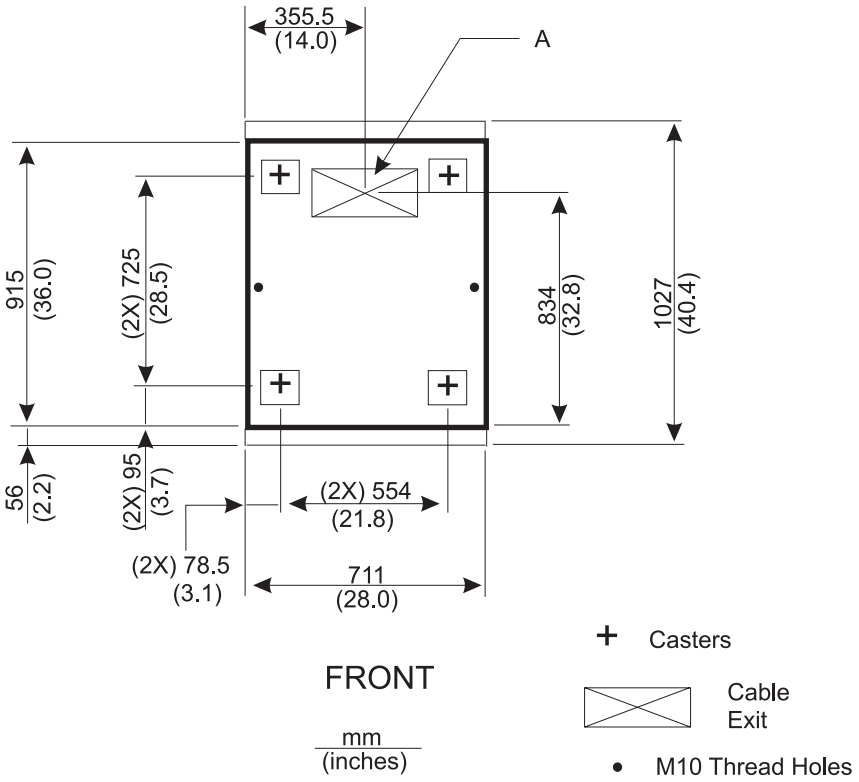

Figure 1-9. Cut-away view of the 1.25 m (49 in.) frame. Locations of the casters and ac power cable and input/output cable egress on the base of the 1.25 m (49 in.) frame. Dimensions are shown in mm (in.)

Table 1-2. Floor cutout dimensions of the 1.25 m (49 in.) frame

Cutout	Size	Use
A	102 mm (4 in.) x 388.4 mm (15.3 in.)	Input/output cables and power cable

Cut-away view of the 2.01 m (79 in.) frame

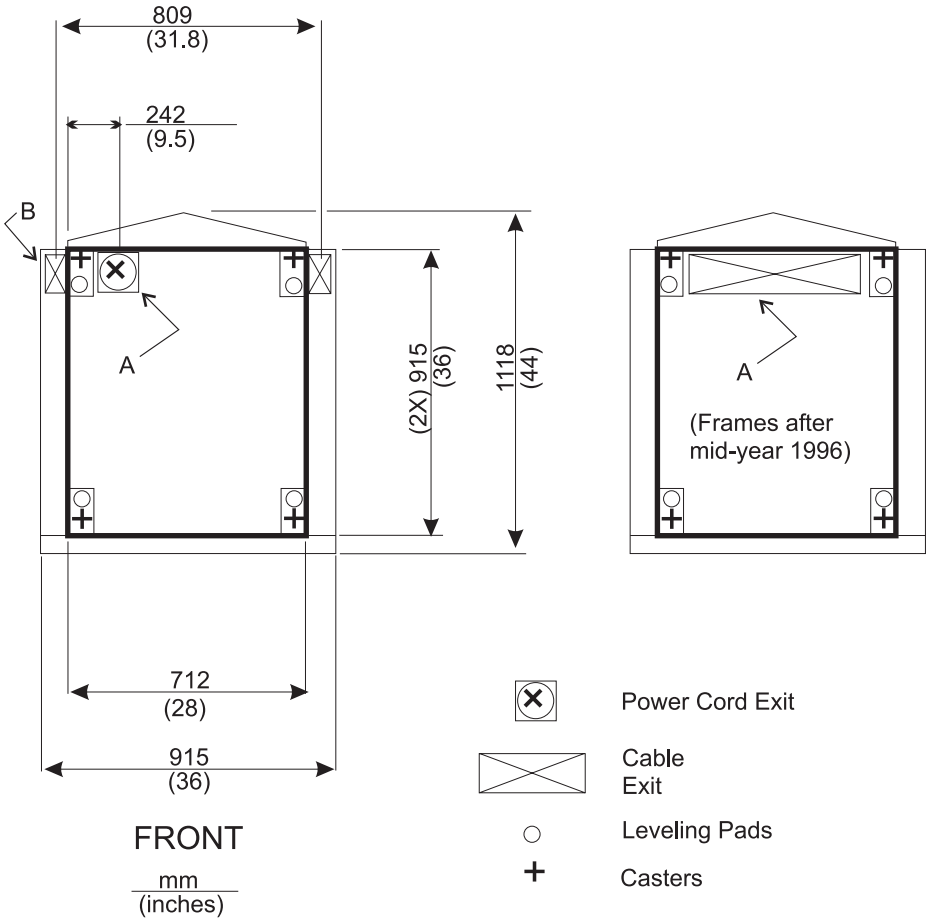

Figure 1-10. Cut-away view of the 2.01 m (79 in.) frame. Locations of the casters and ac power cable and input/output cable egress on the base of the 2.01 (79 in.) frame. Dimensions are shown in mm (in.).

Note: Darker lines indicate outline of frame without covers or skirts.

Table 1-3. Floor cutout dimensions of the 2.01 m (79 in.) frame

Cutout	Size	Use
A	102 mm (4 in.) x 102 mm (4 in.)	Power cable
	102 mm (4 in.) x 407 mm (18.5 in.)	Power cable and input/output cables on factory orders after mid-year 1996
B	83 mm (3.25 in.) x 152 (6 in.)	Input/output cables

Installing the stability foot and wheel chocks

Install the stability foot and wheel chocks:

Note: The stability foot is no longer shipped with the 1.25 m frame.

1. Place the stability foot at the bottom front of the frame. Line up the two holes with the bolt holes in the frame. See Figure 1-11 on page 1-17.
2. Install two M10 bolts and washers through the stability foot into the bolt holes and tighten.

3. Slide a rubber wheel chock on each of the four wheels.

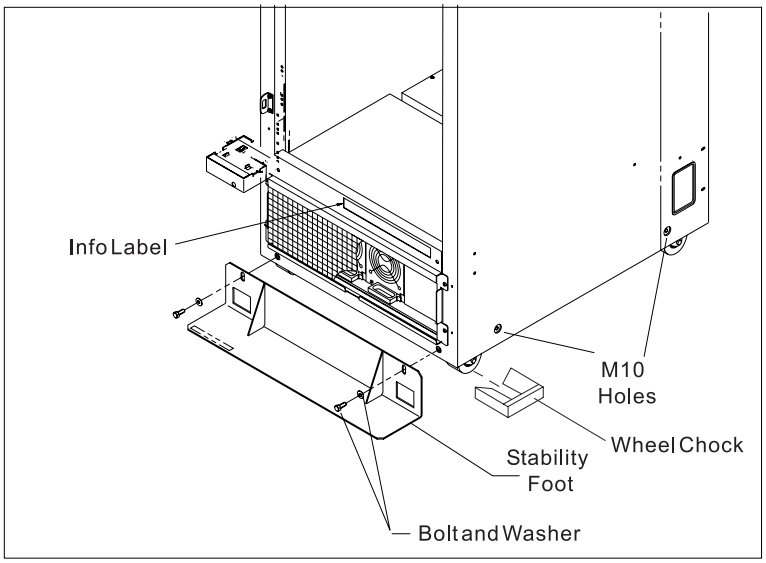

Figure 1-11. Installing the stability foot and wheel chocks

Installing frame tie-down hardware

To install frame tie-down hardware, refer to the following sections for tie-down hole locations.

1.93 m frame tie-down locations

These frames have four M10 x 5.6 mm weld-nuts on the bottom of the frame for attachment to customer-supplied frame tie-down devices. See Figure 1-12 for weld-nut locations.

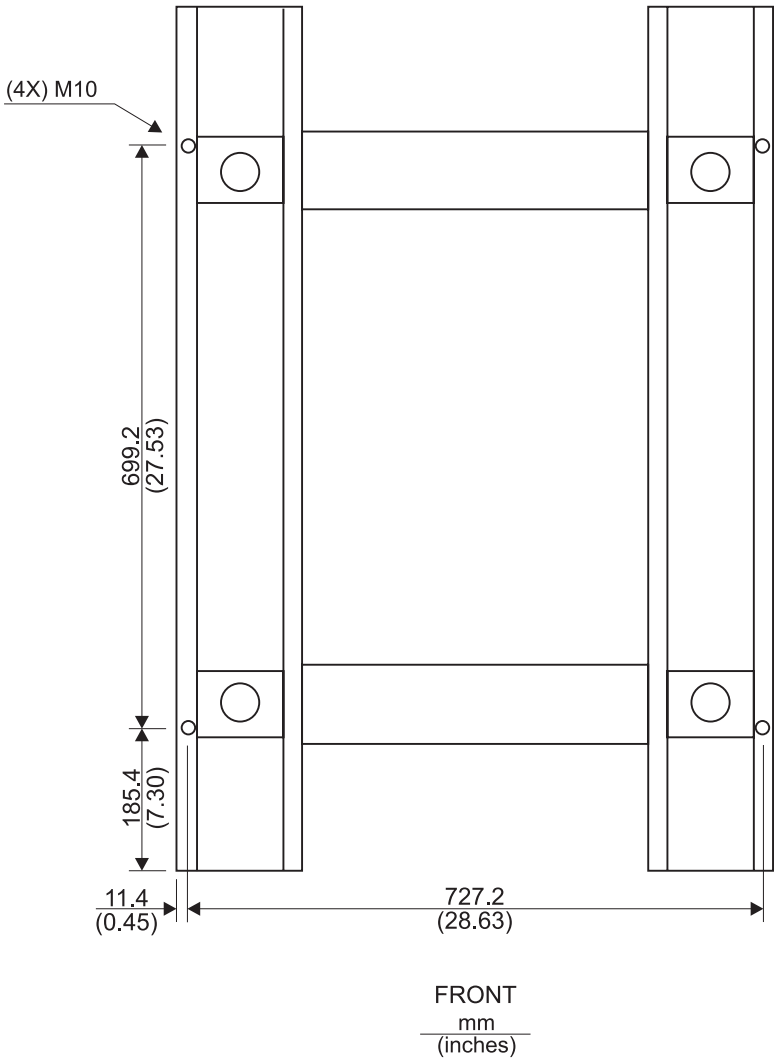

Figure 1-12. Locations of M10 tie-down weld-nuts on 1.93 m frames

1.25 m and 2.01 m frame tie-down locations

The 1.25 m and 2.01 m frames have two M10-tapped holes on each side of the frame for attachment to customer-supplied tie-down devices. See Figure 1-13 and Table 1-4 for hole locations.

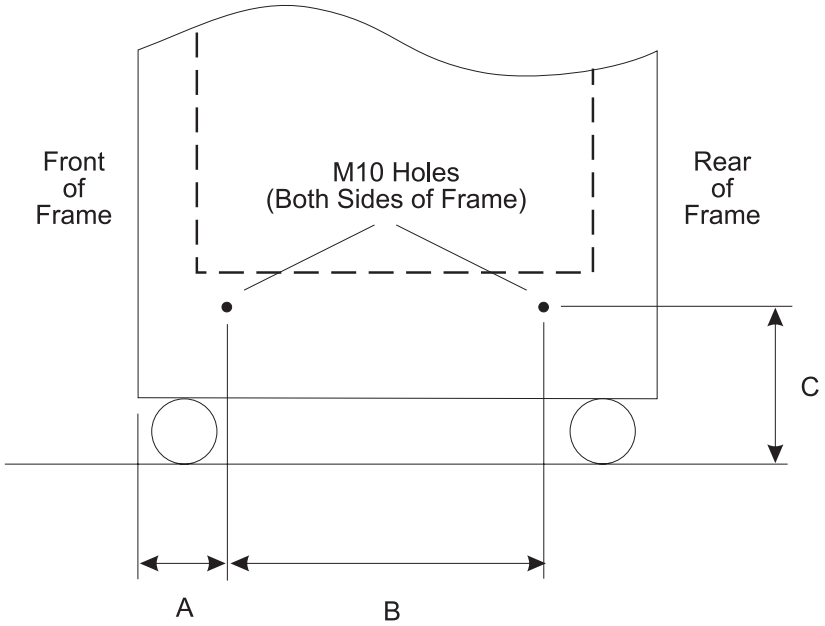

Figure 1-13. Locations of M10-tapped tie-down holes on 1.25 m and 2.01 m frames

Table 1-4. Specifications for tie-down hole locations (see figure above)

Frame	A (front of frame to M10 hole)	B (M10 hole to M10 hole)	C (M10 hole to floor)
1.25 m (49 in.)	150mm (5.9 in.)	615mm (24.2 in.)	90mm (3.5 in.)
2.01 m (79 in.) (After midyear 1996)	175mm (6.9 in.)	565mm (22.2 in.)	123mm (4.8 in.)
2.01 m (79 in.)	150mm (5.9 in.)	615mm (24.2 in.)	123mm (4.8 in.)

Installing the high-voltage transformer feature

Notes

- This feature is no longer in production. It is provided here for relocation purposes only.
- This section on cabling the high-voltage transformer is only for high-voltage (380 - 415 V ac) customers. The high-voltage transformer feature is required only on frames using a power distribution unit (PDU). Frames with a scalable electrical power base unit (SEPBU) do not require this feature.
- Frames with a PDU have a main circuit breaker at the rear of the power compartment (bottom section of frame).

Cabling the high-voltage transformer

Follow these steps to cable the high-voltage transformer:

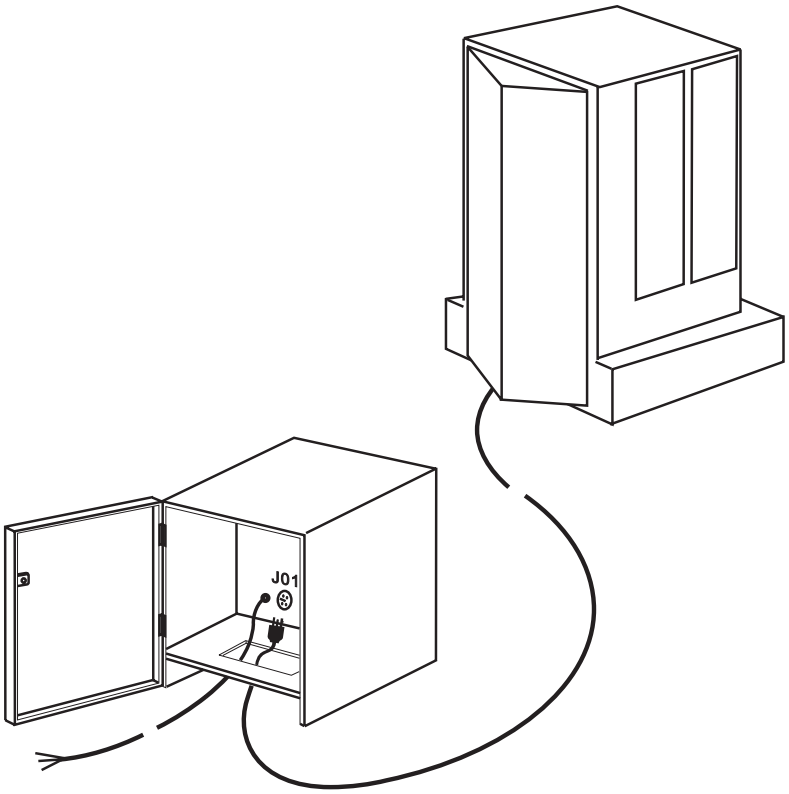

Figure 1-14. Installing the high-voltage transformer

1. Open the transformer using the hex key.
2. Locate the cable coiled inside the service area of the transformer.
3. Uncoil the cable and pull it through the hole in the base of the transformer.
4. Ensure that transformer circuit breakers CB01 and CB02 are in the ‘0’ or down position.
5. Position the high-voltage transformer power cable near the customer’s power receptacle.
6. Take RS/6000 SP power cable connector and run it under the transformer service area and through the hole in the bottom.
7. Plug cable into the output electrical receptacle, J01.

Installing ac power cables and system interconnecting cables

This section includes the following tasks:

- “Connecting ac power to the RS/6000 SP” on page 1-21
- “Installing SP-Attached Server cabling” on page 1-21
- “Installing frame-to-frame switch data cables” on page 1-23
- “Installing SP Expansion I/O Unit cables” on page 1-25
- “Routing RS-232 and Ethernet LAN cables” on page 1-27
- “Connecting PCI or MCA adapter cables” on page 1-28

Note: These tasks should be done in the order that they are listed. If a specific feature is not installed, the task might be unnecessary.

Connecting ac power to the RS/6000 SP

DANGER

Before connecting ac power cables to electrical outlets, ensure the following:

- **The customer's branch distribution circuit breakers (power-source circuit breakers) are off and tagged with DO NOT OPERATE tags, S229-0237 (or national language equivalent).**
- **The activities in "Performing the 50/60-Hz power receptacle safety check" on page 1-5 have been performed on all customer power source outlets and cable connectors.**

1. Ensure that the main power switch is in the Off ('0') position.
2. Ensure that the circuit breakers on the front of each processor node and switch assembly (if present) are in the Off ('0') position.
3. Plug the ac power cables into the SEPBU at the bottom-rear of each frame.
4. Using the appropriate section below, connect the other end of the ac power cables from each frame to the power source.

Using a receptacle or connector

Connect the ac power cables from each frame to the receptacles or connectors which are connected to the proper branch circuit distribution breakers.

Using hard-wired ac power

Ensure that the branch circuit breaker is locked in the off position. (Refer to the "Lockout/Tagout" section in *RS/6000 SP: System Service Guide* for these procedures.) Ask the customer electrician to make connection to a branch circuit junction box or panel, per local requirements.

Installing SP-Attached Server cabling

If you are installing an SP-Attached Server, continue with the following procedures; if not, go to "Installing frame-to-frame switch data cables" on page 1-23.

1. Place the SP-Attached Server frames into their final positions.
2. Complete the SP-Attached Server frame installation and checkout using the appropriate M/T 7017, 7026, 7028, 7039, or 7040 installation and service guide before you connect the SP frames.
3. Attach the SAMI or CSP cable (M/T 7017 and 7026 only):
   - For M/T 7017 –
     a. At the front of the frame, attach one end of cable P/N 31L7196 to the 9-pin SAMI serial port on the left side of the operator panel. Attach the other end of the cable to the customer-designated serial port on the SP control workstation.
     b. Attach one end of cable P/N 31L7197 to serial port 1 at the rear of the primary I/O drawer. Attach the other end of the cable to the customer-designated serial port on the SP control workstation.
   - For M/T 7026 –
     a. Ensure that the Internal Attachment Adapter (F/C 3154) is properly installed; for details, refer to "Testing the Internal Attachment Adapter (F/C 3154)" on page 1-23.

b. Attach one end of cable P/N 31L7196 to the 9-pin D-shell connector on the Internal Attachment Adapter port. Attach the other end of the cable to the customer-designated serial port on the Control Workstation.

Note: 16-port ASYNC cards are not supported for SP-Attached Server attachment; eight or 128-port ASYNC cards are the only supported configurations.

4. Ethernet LAN connections:
   - M/T 7017 and 7026: Ensure that there is an Ethernet adapter installed in slot 5 for M/T 7017 or slot 1 for M/T 7026 (en0 slots) of the SP-Attached Server primary I/O drawer.
   - M/T 7028 and 7039: These attached servers have native Ethernet ports that may be used for connecting to the SP LAN. Optional adapters may be used but will consume a PCI slot.
     – M/T 7028 and 7039 require a Hardware Management Console (HMC) and the HMC requires its own connection to the Ethernet LAN.
   - M/T 7040: Systems configured with an SP Switch2, the LAN adapters must be placed in I/O subsystem slot 8 using the same respective LPAR as the switch adapter. Place a second LAN adapter in slot 9.
     – M/T 7040 requires a Hardware Management Console (HMC) and the HMC requires its own connection to the Ethernet LAN.
   - M/T 7040: Systems configured with an SP Switch, the LAN adapter must be placed in the same respective LPAR as the switch adapter, but does not need to be in the same I/O subsystem.
     – M/T 7040 requires a Hardware Management Console (HMC) and the HMC requires its own connection to the Ethernet LAN.
   - Connect the SP-Attached Server to the SP LAN as described in “Connecting RS-232 and Ethernet LAN cables” on page 1-43.

Note: If you are connecting the SP-Attached Server to a switched SP system, continue with 5. If not, go to “Installing frame-to-frame switch data cables” on page 1-23.

5.

   For M/T 7017 or 7026:
   - At the rear of the SP-Attached Server primary I/O drawer, attach one end of a switch cable to the switch adapter in slot 10 for M/T 7017 or slot 5 for M/T 7026.
   - If this is an SP Switch2 two-plane installation, connect another switch cable to the second switch adapter in slot 10 of the secondary I/O drawer for M/T 7017 or slot 3 of the primary I/O drawer for M/T 7026.

   For M/T 7028:
   - M/T 7028 can only be configured with the SP Switch2.
   - Switch adapters are not allowed in any I/O drawers attached to the server.
   - The SP Switch2 PCI Attachment Adapter (F/C 8397) must be placed in server slot 1 or 3. Slot 2 must be left open for cooling.

   For M/T 7039:
   - M/T 7039 can only be configured with the SP Switch2.
   - Switch adapters are not allowed in any I/O drawers attached to the server.
   - The SP Switch2 PCI-X Attachment Adapter (F/C 8398) must be placed in server slot 1 or 3 or both if LPARs or two-plane switch configurations are used.

Note: M/T 7039 cannot be LPARed if a two-plane switch configuration is used.

- For LPARed systems configured with the SP Switch2, both LPARs must be attached to the switch fabric and one adapter is required for each LPAR. Each server has a maximum of two LPARs.
- For two-plane switch configurations, server slot 1 is used for css0 and server slot 2 is used for css1.

For M/T 7040:

- Install the SP System Attachment Adapter (F/C 8396) in I/O subsystem slot 8 only (one adapter per LPAR).
- Install the SP Switch2 Attachent Adapter (F/C 8397) as follows:
  - Single-plane – Install in I/O subsystem slot 3 or 5, or both if on separate LPARs (one adapter per LPAR).
  - Two-plane – Install in I/O subsystem slot 3 for css0 and slot 5 for css1 (one adapter per LPAR).

Attach the other end of the switch cables to the switch in the node jack positions designated by the customer. Refer to Table A-3 on page A-4.

6. Continue with “Installing frame-to-frame switch data cables”.

Testing the Internal Attachment Adapter (F/C 3154)

The Internal Attachment Adapter (F/C 3154) should be plugged into the M/T 7026 primary I/O drawer, slot 7 with its ribbon cable plugged into J12 of the I/O planar. J12 is located under the front edge of the I/O planar underneath I/O slot positions I1, I2, and I3.

To test the adapter, you need a standard 9-pin D-shell wrap plug (p/n 6298965) and a gender-bender (p/n 5199906). Execute the test as follows:

1. On the initial (main) service processor menu, enter **87847**
2. Choose option **To execute test**
3. Wait for a response of pass or fail

Installing frame-to-frame switch data cables

Perform the following procedures to install switch frame-to-frame cables:

1. Designate each frame with the number sequence one to n. Place the frames in their final positions according to the customer’s floor layout diagram. Frames should be within 3 m (10 ft.) of each other.
2. To familiarize yourself with the naming conventions for components in the RS/6000 SP system, refer to the “Locations” and “Service Procedures” sections of *RS/6000 SP: System Service Guide*.
3. To familiarize yourself with the switch cable bulkheads, see Figure 1-15 on page 1-24 for the SP Switch or Figure 1-16 on page 1-24 for the SP Switch2.

SP Switch (SPS)

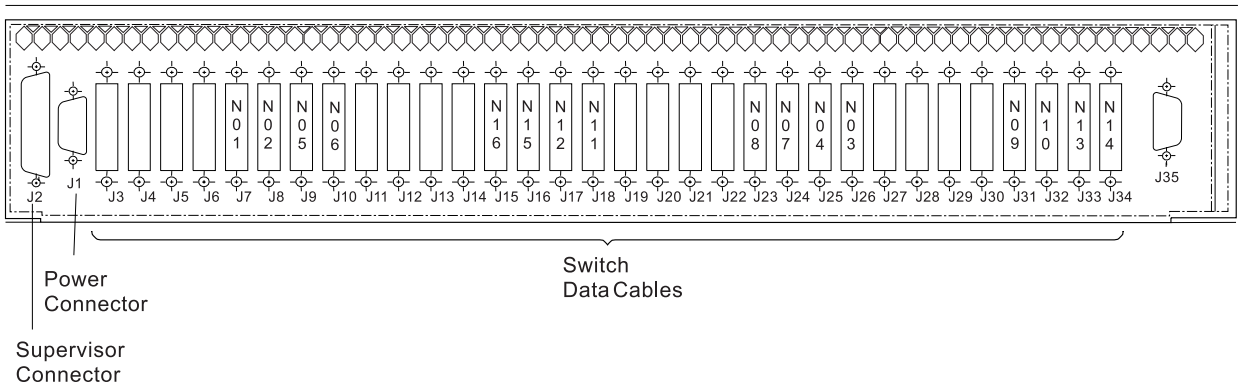

SP Switch-8 (SPS-8)

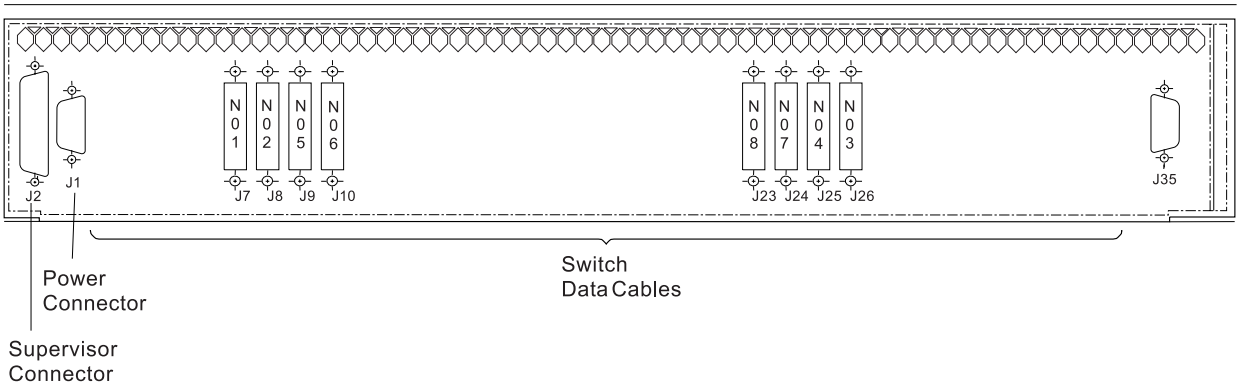

Figure 1-15. SP Switch bulkheads

SP Switch2 (F/C 4012)

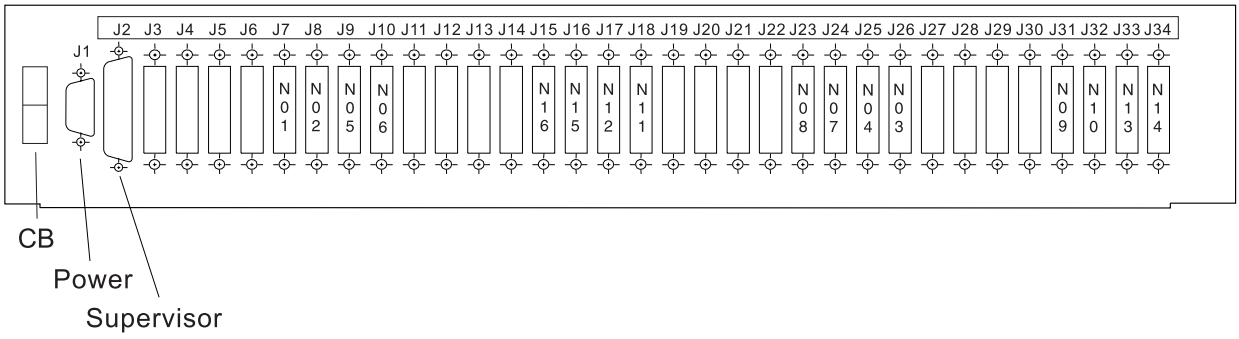

Figure 1-16. SP Switch2 bulkhead

4. Service hint: You can wrap a light-colored shop towel or cloth over the ends of cable bundles when running cables under a raised floor. This helps avoid damage to connector pins, keeps the cable ends together, prevents connectors from catching on things, and makes it easier to see the cable bundle under the raised floor.

Attention: Switch data plug/jack connector pins are easily bent. Check for bent pins on male plugs or bent pin guides on female jacks if a cable is difficult to plug in. Problems with bent pins or pin guides can propagate to new plugs and jacks if not corrected. At the switch, listen for the audible “click” as the cable is seated to insure proper cable retention.

5. If the system you are installing includes expansion frames, connect 10-meter switch data cables from the model frame switch to the expansion frame nodes using the appropriate charts in “Switch-to-node cable connections” on page A-2. For cable routing paths, refer to the “Cable Routing” section in *RS/6000 SP: SP Switch Service Guide* or *RS/6000 SP: SP Switch2 Service Guide*.
6. If the system you are installing has multiple switches, install the switch-to-switch cables using the appropriate charts in “Switch-to-switch cable connections” on page A-6 for the frame configuration that you are installing.
7. Locate the pre-printed cable serial number sheet (p/n 54G3277) and the mylar tape roll (p/n 04H9532) from the ship group.
8. Place a serial number label-pair on each switch cable (one label near one end of the cable and its matching label near the other end).
9. Wrap the mylar tape over the labels to secure them to the cables and to protect them from damage.
10. Record the serial numbers from the cables into the appropriate charts.
11. Neatly bundle all switch cables after they are all installed.

    Note: On POWER3 SMP High Nodes, ensure that there is a 610-mm (2-ft.) service loop in the switch cables so that the node drawer can be moved into the service position (see Figure 1-17 on page 1-26).
12. For the SP Switch, ensure that all unused switch ports (SPS-BH-J3 through SPS-BH-J34) have switch data wrap plugs (P/N 46G5619) installed.
13. For the SP Switch2, ensure that all unused switch ports have blank interposer cards (P/N 31L8458) installed.

Installing SP Expansion I/O Unit cables

Using the customer’s configuration, connect the SP Expansion I/O Unit cables to the POWER3 High Node as shown in Figure 1-18 on page 1-27. Valid loop connectors are Q1-Q2, Q3-Q4, and Q5-Q6. According to configurator rules; for one to three SP Expansion I/O units attached to a node, they must be connected in single-unit loop configurations only. When four or more units are attached to a node, they can then be attached in double-unit loop configuration.

Notes:

1. Label both ends of each SP Expansion I/O Unit cable loop with colored labels, using a different color for each loop. Place corresponding colored dots on their respective connectors, both on the node and on the expansion unit drawers.
2. Ensure that there is a 610-mm (2-ft.) service loop in the SP Expansion I/O Unit cables so that the POWER3 High Node drawer can be moved into the service position; see Figure 1-17 on page 1-26.

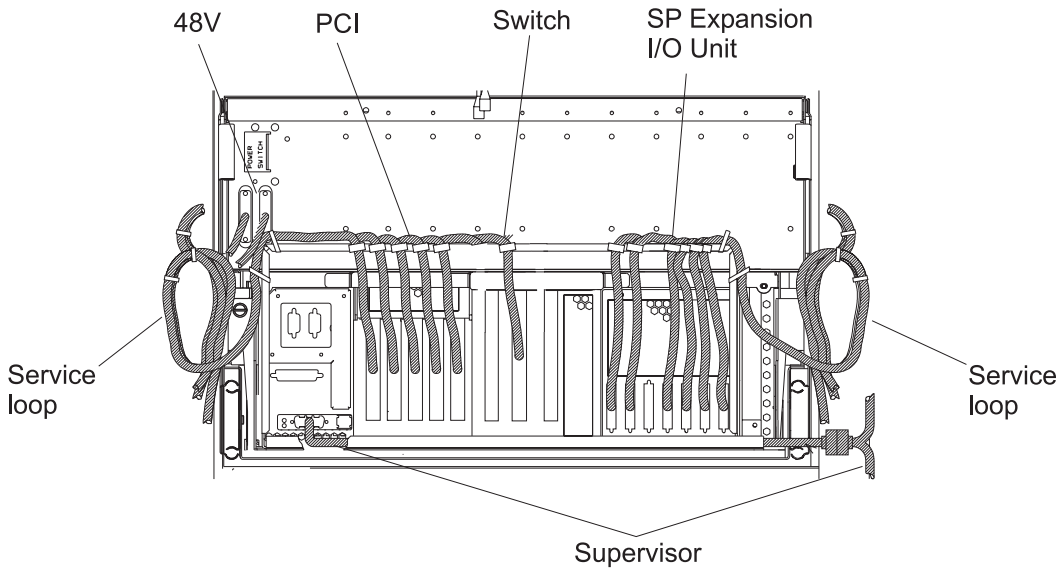

Notes:

1. Route switch and adapter cables to the ***left*** side of the rear of the node, and create the 610-mm (2-ft.) service loop.
2. Route SP Expansion I/O Unit cables to the ***right*** side of the rear of the node, and create the 610-mm (2-ft.) service loop.
3. Secure each cable assembly to the cable managment bracket.
4. Secure the service loop cables together every 75-100 mm (3-4 in.).
5. Secure the service loop cables to the frame cable raceway.
6. Cables in the service loop do not need to be unplugged to slide/move the POWER3 SMP High Node into or out of the frame.
7. The 48V power cable, the node supervisor cable and the Ethernet cable are not part of the service loop and do need to be unplugged to move the node into the service position.
8. The I/O assembly can be serviced without disassembly of the service loop except when you have to service a specific adapter card, SP Expansion I/O Unit interposer, or the attached cable.

   Service hint: The distance between the inside of the left and right frame members is 686 mm (27 in.).

Figure 1-17. POWER3 High Node I/O cable service loops

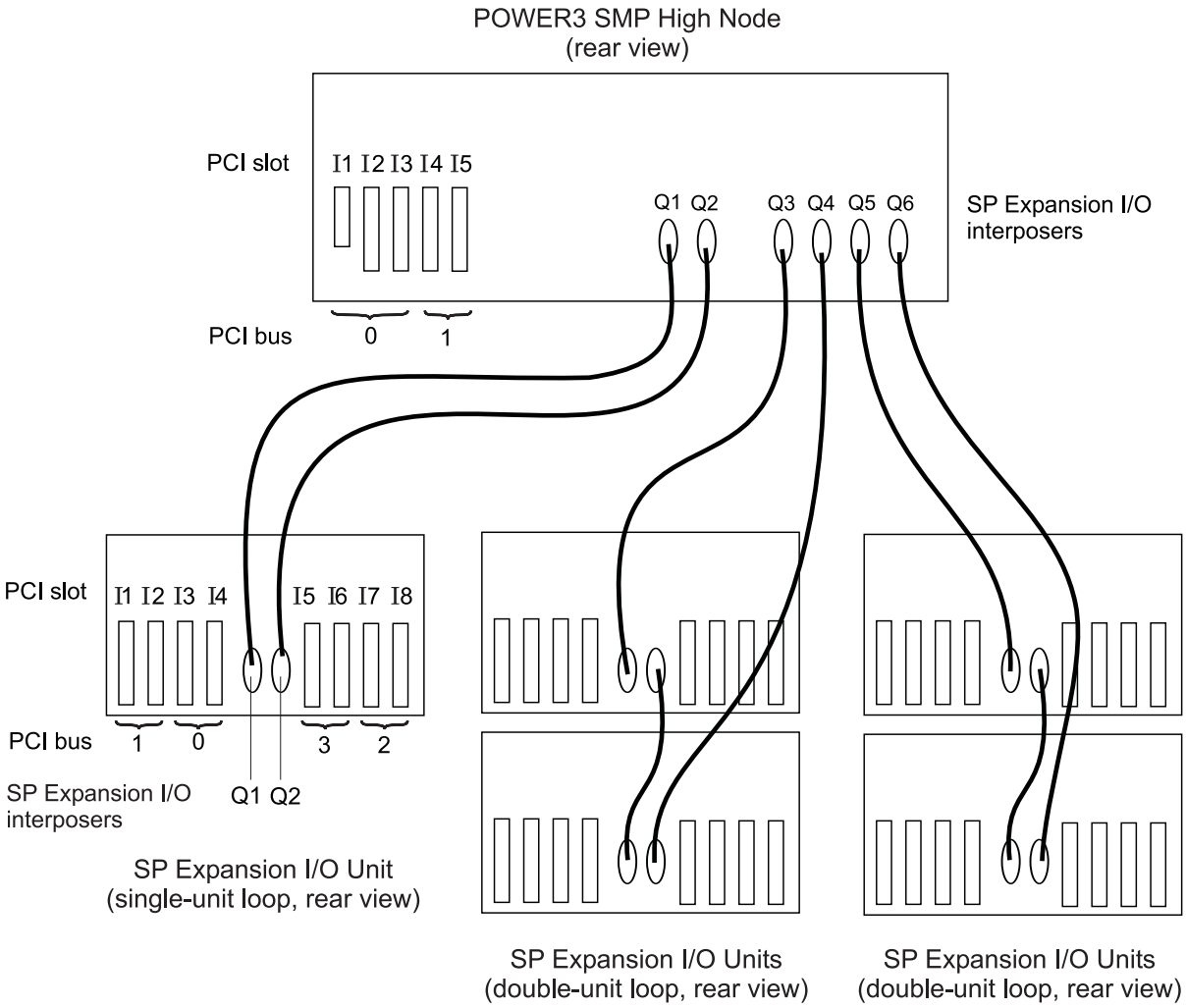

Figure 1-18. SP Expansion I/O Unit cable connections

Routing RS-232 and Ethernet LAN cables

1. Route the RS-232 cables from the RS/6000 SP frame to the customer's control workstation(s).
2. If this frame has processor nodes, route the standard Ethernet LAN cable from the RS/6000 SP frame to the customer's control workstations.

   Notes:

   a. On POWER3 SMP High Nodes, ensure that there is a 610-mm (2-ft.) service loop in the LAN cable so that the node drawer can be moved into the service position (see Figure 1-17 on page 1-26).

   b. Depending on machine type, some SP-Attached Servers may require an RS-232 connection to each server or an RS-422 connection between the server frame and the HMC. Refer to @server *Cluster 1600: Hardware Planning, Installation, and Service* for details on connecting these components.

Connecting PCI or MCA adapter cables

1. Connect cables at PCI or Micro Channel® adapters and external devices.

   Note: On POWER3 SMP High Nodes, ensure that there is a 610-mm (2-ft.) service loop in the adapter cables so that the node drawer can be moved into the service position (see Figure 1-17 on page 1-26).
2. For I/O adapter cable routing diagrams and additional cabling information, see "Installing cables for PCI and Micro Channel Adapters" on page B-1.

Installing skirts, frame covers, and main power switch

Installing the acoustic skirts

Perform one of the following procedures, depending on the frame type, to install the acoustic skirts :

1.93 m frame

1. Hang the side skirt on the shoulder bolts using the keyholes in the skirt.
2. Temporarily install the front skirt near the bottom of the frame using the bottom locating pins on the side skirts.
3. Engage one end of the front skirt at a time by lifting from the bottom surface of the skirt at the end you want to engage.
4. Push the top of the skirt onto the upper locating pins.
5. Tighten the 2 quarter-turn screws at the top of the skirt into the filter bracket.

   Note: The air filter is no longer used on these frames.

2.01 m frame

1. Position the side skirt onto the two shoulder screws on the side of the frame.
2. Reinstall the two mounting screws at the lower rear inside the frame. Do not tighten.
3. Replace the front skirt assembly. Position the side skirt lower aligning pins into the front skirt alignment pin holes. Once the front skirt is aligned with the side skirt, fasten the two captive screws by turning them a half turn.

   Note: Engage one end of the front skirt at a time by lifting from the bottom surface of the skirt at the end you are engaging.
4. Tighten mounting screws at lower rear, inside the frame.

Installing frame covers

1.93 and 1.25 m frames

Frame covers are factory-installed on 1.93 and 1.25 m frames.

Model 555 and 556 switch frames

Install the front door:

1. Start with the top pin first. Slide the top pin on the door into the top hinge on the rack until it is fully engaged.
2. Slide the bottom pin on the door into the bottom hinge on the rack until it is fully engaged.
3. Close the door and engage the latch on the left side of the door.

Install the rear door:

1. Start with the top pin first. Slide the top pin on the door into the top hinge on the rack until it is fully engaged.
2. Slide the bottom pin on the door into the bottom hinge on the rack until it is fully engaged.
3. Close the door and engage the latch on the left side of the door.

2.01 m frame

1. Install front cover on hinge brackets. Adjust brackets (if required) so the cover is centered left to right and the top is even with the side covers. Tighten bracket screws.
2. At inside bottom of front cover, remove small bolt for ground strap connection. Put bolt through washer and lug on ground strap. Install bolt into hole of front cover and tighten.
3. Install rear cover on hinge brackets. Adjust brackets (if required) so cover is centered left to right and top is even with side covers. Tighten bracket screws.

Installing the main power switch

1.93 and 1.25 m frames

1. The main power switch is factory installed on these frames.
2. Install the protective plastic cover over the power switch. The cover and its mounting instructions are in the ship group.

2.01 m frame

Refer to Figure 1-19 on page 1-30 as you perform the following procedure. (See “Main Power Switch Assembly” in *RS/6000 SP: System Service Guide* if you need the part numbers.)

1. Unpack main power switch assembly.
2. Remove two mounting screws from the frame assembly near the hole for the main power switch assembly.
3. Lift main power switch assembly near hole in the frame assembly. Push excess cable into hole in the frame assembly.

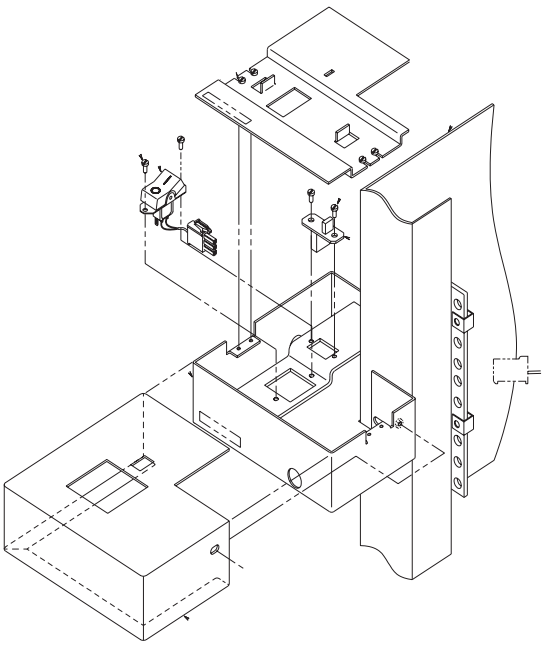

Figure 1-19. Installing the main power switch

4. Install the two mounting screws that hold the main power switch assembly to the frame. Make sure you are using the lower two holes of the frame and that the cable is not pinched.
5. Install plastic slide rails on both sides of the depression on top side of the main power switch assembly, with thin edges toward top and outside of depression.
6. Install clear plastic slide cover on rails, with its indentation on top and on left side.
7. Install metal cover over the main power switch assembly and install the screw in the right side of the metal cover.

Performing RS/6000 SP System power-on and verification

Notes:

1. For systems with a switch feature, complete the physical installation of the entire system before performing full verification of the switch feature.
2. A 9077 (any model) is not specifically tested with the following procedures. Refer to the *SP Switch Router Adapter Guide* for more information.

Attention: On all CHRP nodes, wait 30 seconds after turning off the 48 V dc inline circuit breaker before you turn the circuit breaker back on.

Verification of the system can be performed from the preloaded control workstation for a new SP system, using the CE Installation Aid laptop for MES frame-adds, or by using the customer's configured CWS for any MES activity. Perform one of the following procedures as appropriate:

- "Verifying SP frames using a control workstation install tool image" on page 1-31.
- "Verifying SP frames using a CE Installation Aid laptop" on page 1-37.
- "Verifying nodes and switches using the customer configuration" on page 1-44.

If results from any of the verification steps are not as stated, go directly to "Start of Call" procedures in *RS/6000 SP: System Service Guide* to perform RS/6000 SP

service operations. You might also find it helpful to use the 'Problem Determination' section of the *Parallel System Support Programs for AIX: Administration Guide*. Return to the install when the problem has been fixed.

Verifying SP frames using a control workstation install tool image

Use these instructions for new SP system installs for either of the following cases:

- The control workstation is shipped with a preloaded install tool image
- You will load the install tool image from tape onto the control workstation

Notes - Verifying frames with a control workstation install tool image

1. A control workstation install tool image can be used to test multiple frames, unlike the CE Installation Aid laptop.
2. You can connect the TTY cables from an appropriate CWS serial port to the frames at any point until you complete Step 1 of the menus. If the customer has defined TTY connections, you should attempt to match those connections.
3. You can connect the Ethernet LAN cables from an appropriate CWS Ethernet port to the frames at any point until you are ready to run the "Verify processor node" step. If the customer has defined LAN connections directly to the frame, you should attempt to match those connections. If the customer is using a LAN switch or router (anything more complex than a hub), you might have to connect the LAN directly from the CWS adapter to the nodes boot LAN.

1. If the control workstation was not preloaded with the install tool image, perform "Loading the control workstation install tool image" on page 1-35, then return here.
2. Perform the physical installation of the control workstation. Ensure that all asynchronous (serial port) and Ethernet LAN adapters are installed in the workstation and any externally attached breakout boxes before attempting to test the SP system.
3. Turn on the control workstation and wait for the login prompt. At the prompt, enter **`root`**; no password is required.

   Note: If the control workstation fails to boot, follow the instructions in the service guide for the control workstation to correct the problem. If repair actions cause the preloaded image to be destroyed, follow the procedures in "Loading the control workstation install tool image" on page 1-35 and then return here.
4. At the AIX® prompt, enter **`xinit`** to start X-windows. From an AIX window, enter **`sptest`** to display the **SP Installation Menu**; **sptest** is in directory **/usr/lpp/ssp/cediag/cws**.
5. Connect the TTY and Ethernet LAN cables between the CWS and the frames. Ensure that you have a record of the TTY and LAN connections for each frame so that you can configure the software properly to match the physical configuration.
   - LAN connections can be made through a hub or a LAN switch, but should not be made through a router. This is because the network boot operation is not sophisticated enough to set up or handle communication through a non-transparent device in the LAN.
   - For more information on properly connecting these cables, refer to "Connecting RS-232 and Ethernet LAN cables" on page 1-43.

6. If the LAN is using a hub or a LAN switch, ensure that the nodes are connected into it properly.
7. For each frame in the system, check the circuit breakers and power sequence the frame as follows:
   a. Ensure that the main power switch is in the Off ('0') position.
   b. Ensure that the circuit breaker on each processor node and switch assembly (if present) is in the Off ('0') position.
   c. Remove the lockout condition to restore the ac power connection for this frame.
   d. Switch on the ac power for this frame.
   e. Place the frame power switch in the On ('1') position.
   f. Place the circuit breaker for the switch assembly (if present) in the On ('1') position.
8. From the **SP System Installation Menu**, select **Frame Configuration** to view and enter the configuration for each frame. From **Frame Configuration**, complete the following:
   a. Use "**a**" to add any new frames to the current configuration. You are prompted for TTY port, LAN connection and type, and IP address information for the LAN and switch (if present).
   b. If you have frames defined which do not appear on the screen, use "**+**" to scroll forward or "**-**" to scroll backward through the list.
   c. Once a frame is defined, you modify its configuration information by typing the frame number. Once you select a frame, the **Current Frame information** menu displays. From this menu you can enter the following:
      - "**d**" to delete any frames that were not defined by these menus.
      - "**t**" to change TTY information. You are asked to select an asynchronous adapter. If the adapter supports multiple ports, you are asked to select a port. This must correspond to the physical connection.
      - "**l**" to change LAN information. You are asked to select a LAN adapter. You are prompted for a CWS IP address, a netmask, the type of connection at the CWS, an IP address for the first node in the frame, and the type of connection. You can use the default values if ou are unable to determine the customer's configuration.
      - "**s**" to change switch information. You are prompted for a switch IP address for the first node in the frame and a netmask.
      - "**b**" to return without updating any modified frame information.
      - "**n**" to return with updated frame information for this frame.
   d. Use "**s**" to delete all frames that were defined by these menus.
   e. Use "**b**" to return without updating any modified system information.
   f. Use "**n**" to return with updated system information. This causes the configuration code to attempt to contact the defined frames to fill in more information about the system configuration, such as the number and types of nodes and switches.
9. Once the system has been defined and configured, from the **SP System Installation** menu, select the **Verify Frame Controls** step. This step removes power on each frame, testing the frame power controls and sensors.
10. Ensure that the circuit breakers on every switch assembly and processor node under test are in the On ('1') position.

11. From the **SP System Installation** menu, select **Gather Ethernet Hardware Addresses** step. This step acquires the Ethernet hardware addresses specific to each node in each frame.

    Note: If this step fails on any processor node, retry this step. Nodes often work on subsequent attempts.

12. From the **SP System Installation Menu**, select **Start System Monitor** to start the system monitor.
13. Verify processor nodes as follows:
    a. Check the frame to determine the number of processor nodes. Ensure that the values at the top of the **SP System Installation Menu** accurately reflect the current frame configuration.

       Note: If information is incorrect, use MAPs to isolate problem.

    b. Ensure that the circuit breakers of the processor nodes are in the On ('1') position.
    c. From the **SP System Installation Menu**, select **Verify Processor Nodes**. The software performs the following:
       1) Verifies communication to the frame, the processor nodes, and the switch assembly (if present).
       2) Turns off power to the processor nodes in this frame under program control.

       Note: You are prompted to boot the nodes automatically. If you answer "yes", go to step 13f.

    d. From the **Hardware Perspective** window:
       1) Click on a processor node. To select more than one node, press <Ctrl> as you click on other processor nodes (see note below).
       2) Click on **Actions** at the top of the window.
       3) Click on the **Network Boot...** option.
       4) Click on the **Apply** button of the popup window.

          Note: The CE Installation Aid supports network boot of up to 6 processor nodes at the same time, so select up to 6 processor nodes, wait until they complete IPL, then repeat step with next set of processor nodes.

    e. From the **3DigitDisplay** window, verify that for each processor node selected above, the 3DigitDisplay is cycling through the IPL sequence.
    f. Wait for the 3DigitDisplay to show one of the following conditions (for Thin or Wide nodes it should not take more than 10-15 minutes; for High nodes and 332 MHz nodes it might take up to 1.5 hours, depending on the configuration of the node):
       - **uuu**: PASS - indicates that diagnostics passed on a non-SMP node.
       - **0aaa**: PASS - indicates that diagnostics passed on an SMP node.
       - **000**: FAIL - indicates that diagnostics found a problem.

         Action: Wait until next step to get report on failures.
       - **Stuck on 231 or E1F7**: IPL PROBLEM - indicates problem with Ethernet IPL

         Action:
         – All nodes – Perform "Ethernet LAN Isolation Procedure" in *RS/6000 SP: System Service Guide*

– Single nodes – Check T-adapter coax connection at the rear of the processor node for a loose connection.

- **Stuck on same value** more than 4 minutes or **Flashing 888**: HANG or CRASH - indicates a problem during IPL or diagnostics.

  Action: Perform the following steps until condition clears:
  1) Perform “Net Boot” on this processor node to see if problem clears.
  2) Use the MAPs *RS/6000 SP: System Service Guide* in to determine the problem.

g. From the **SP System Installation Menu**, select **Check Node Diagnostics** to check results of processor node verification. This can be done at any time; however, you get an error if no nodes have completed diagnostics.

14. If a switch feature is installed, verify the switch feature in this frame:

    Attention: This step interferes with any customer use of the switch feature. If this frame is attached to other frames that are in use by the customer, first get concurrence from the customer before continuing.

    Note: If you find any problems here, refer to the “Switch Function” MAP in *RS/6000 SP: System Service Guide* to correct.

    a. From the **SP System Installation Menu**, select **Verify Switch Feature** to verify the switch feature.

    b. From the **SP System Installation Menu**, select **Check Switch Diagnostics** to check the results of the switch feature verification.

    c. From the **SP System Installation Menu**, select **Verify Switch Clocks** to test the switch clock selection logic and any frame-to-frame switch clock cables. Follow directions given by the software.

       Note: This step requires that all switch cabling is installed.

15. Completing the frame:

    Attention: If this frame contains any switch adapters or switch assemblies, you must leave the frame, processor nodes, and switch assembly turned on until all frames have been verified. Successful verification of the switch network depends on correct settings left after frame verification by the CE Installation Aid.

    a. From the **SP System Installation Menu**, select **Finish Frame** to perform required procedures following verification of each frame.

    b. If you had to modify the Ethernet cabling from the customer’s desired configuration to perform this testing, restore it now to match the customer’s configuration.

16. Record the verification time for the system.
17. Record the installation as complete for the system serial number.
18. Verification of the system is now completed.
19. To restore the control workstation to a default state for the customer, enter **`cleanup_sptest`**.
20. To remove possibly incorrect configuration information on the control workstation, enter **`pssp_cleanup`**
21. If you want to shut down the CWS, open an AIX window and enter **`shutdown -F`**. The CWS eventually displays **Halt completed** and might automatically turn off. If not, you can manually turn off power.

Loading the control workstation install tool image

Note: This procedure requires using the CWS tool image tape which is shipped in the RS/6000 SP ship group. Table 1-5 lists the different tape versions that can be in the ship group, depending on the CWS model:

Table 1-5. CWS install tool tape versions

Control workstation type (see Note 1)	Tape media size	IBM part number
Micro Channel Uni/SMP (rs6k)	4mm	11P1019
Models 590, R40, plus any other MCA bus	8mm	11P1012
Micro Channel SMP (rs6ksmp)	4mm	11P1035
Model R40	8mm	11P1031
(see Note 2)		
PCI (rspc)	4mm	11P1027
Models 7024-E40/E30, 7025-F30/F40, 7043-140/240	8mm	11P1023
CHRP (chrp)	4mm	11P1073
Models 7025-F50, 7026-H10/H50, 7043-150/260 plus newer models	8mm	11P1072
(see Note 3)		

Notes:

1. To check a control workstation platform, issue **`bootinfo -p`**. A value of rs6k, rspc, or chrp should be returned.
2. Micro Channel SMP machines can also boot from the Micro Channel Uni/SMP version.
3. Several models of workstations use CHRP architecture; however, only F50 and some future workstations are considered to be the CHRP platform.

Use the following procedure to install the tool image or to recover it if a preloaded image on a hard disk drive has been destroyed. When you load this tape, it ***overwrites*** any data on the install disk. Never load this tape on a control workstation which has been configured for use by the customer.

1. Locate the tool image tape from the ship group. The label should contain the following information:
   9076 DEFAULT IMAGE TAPE 01 of 01
   AIX 4.3.3 TOOL-xxxx IMAGE
   (where xxxx = MCA. SMP, PCI, or CHRP)
2. Insert the tape into the tape drive of the control workstation.
3. If this control workstation has a keyswitch (MCA/SMP), put the keyswitch in the Service position. The tape drive is usually in the Service bootlist. To check or modify the current Service bootlist, perform the following.
   - From AIX, enter **`bootlist -o -m service`** and look for **`rmt`** or **`rmt#`** in the result. To modify the bootlist, make note of the current contents, then enter **`bootlist -o -m service rmt`**. You can also specify a particular tape drive by substituting the appropriate rmt or rmt#.
   - From diagnostics, select **Task Selection**, then select **Display or Change Bootlist**, then select **Service mode bootlist**. To check the current bootlist, select **Display Current Bootlist** and look for **`rmt`** or **`rmt#`** in the result. To

modify a bootlist, make note of current selections, then select **Alter Current bootlist**, then make the required changes to the bootlist, and then press **Commit**.

4. Turn on or reboot the control workstation.
5. If this control workstation does not have a keyswitch (PCI or CHRP), proceed as follows:
   a. Access the **SMS** menu by pressing <F1> after the keyboard icon displays on the screen.
   b. In the **SMS** menu, modify the bootlist to make the appropriate tape drive the first boot device.
   c. Exit from the menus to reboot the control workstation.
6. After a few minutes of loading from the tape, a prompt for information displays. Proceed as follows:
   a. Press <F1>, then press <Enter> to define the system console.
   b. Type **1**, then press <Enter> for English.
   c. When the **Welcome to Base Operating System Installation and Maintenance** menu displays, proceed as follows:
      1) Type **2**, then press <Enter> for **Change/Show Install Settings and Install**.
      2) Follow the displayed instructions to make the appropriate disk selection. When disk selection completes, type **0**, then press <Enter>.
      3) If you are certain that you can overwrite existing control workstation data, type **0**, then press <Enter> to start load.
   d. A screen indicating the status displays (% tasks complete and elapsed time). The remainder of the tape load takes approximately 2 to 3.5 hours.
7. When the tape load is complete, the control workstation reboots from the hard disk.
8. Remove the tape from the tape drive.
9. Log in as user ID **root**.
10. Continue with “Verifying SP frames using a control workstation install tool image” on page 1-31.

Selecting an international keyboard layout

This procedure allows you to select a non-en_US keyboard layout, in order to match the customer’s keyboard hardware.

1. Log in with the user ID **root**.
2. Using the left mouse button, open an AIX window.
3. Type **smit** (or **smitty**) and press <Enter>.
4. From **smit**, set the keyboard for X-windows as follows:
   a. Select **System Environments**, then **Manage Language Environment®**, then **Change/Show Primary Language Environment**, then **Change/Show Cultural Convention, Language, or Keyboard**.
   b. Next to **Primary KEYBOARD**, select **List** to display list of keyboard selections. From this list, select the appropriate keyboard choice. In many cases, this is the **ISO8859** Default selection for the language shown as lower-case/upper-case, such as **fr_FR**. Press <Enter> or click the appropriate button to complete the setting.
5. Exit back to main smit screen, then set the keyboard for the **lft** (login screen) as follows:

a. Select **Devices**, then **Low Function Terminal (LFT)**, then **Software Keyboard**, then **Change the Keyboard Map for the Next System Restart**.

b. Next to **PATHNAME of Keyboard Map**, select **List** to display list of keyboard selections. From this list, select the appropriate keyboard choice. In many cases, this is the selection that looks like **/usr/lib/nls/loc/it_IT.lftkeymap** (language in lower-case/upper-case). Press <Enter> or click the appropriate button to complete the setting.

6. Exit smit, then reboot the workstation by typing **`reboot`** and then press <Enter>.
7. Once the control workstation reboots, the new keyboard layout is active.

Verifying SP frames using a CE Installation Aid laptop

Notes - CE Installation Aid laptop

1. The CE Installation Aid laptop is capable of verifying only one frame at a time.
2. To verify the switch feature in an efficient manner, observe the following:
   - Any multi-switch frames should be verified before other frames in the system.
   - Any expansion frames (F/C 1500, 1550, 1010/15/16/17/19) should be verified before their corresponding base frame (frame with switch).
   - For systems with an ***SPS*** switch, logical frame 1 should be the ***first*** frame verified (but verified after any multi-switch frames). For systems with a ***HiPS*** switch, logical frame 1 should be the ***last*** frame verified.
   - The user note window comes up automatically, or can be retrieved from the root menu pop-up window (using the left mouse button).

Preparing the CE Installation Aid laptop

Note: If you have problems performing these steps, call the next level of support.

1. Refer to the steps for your laptop type:
   - ***ThinkPad®*** laptop:
     a. Ensure that the Ethernet PCMCIA adapter is ***fully seated*** (pushed in) on the right-rear corner of the ThinkPad.
     b. Connect the appropriate Ethernet adapter cable (coax or twisted pair) to the Ethernet PCMCIA adapter card.
     c. Refer to the ThinkPad cabling diagram, Figure 1-20 on page 1-38.
   - ***Acer*** laptop:
     a. Connect the Ethernet thick cable from the Ethernet converter box to the Ethernet port on the rear of the laptop.
     b. Refer to the Acer cabling diagram, Figure 1-21 on page 1-39.
2. If you are using an Ethernet coax LAN, ensure that a “T” or “Y” connector and a 50-ohm terminator are connected to the Ethernet coax cable end you are connecting to the laptop cable/converter box.
3. Connect the Ethernet cable/converter box to the Ethernet LAN for the frame.
4. Plug the CE Installation Aid laptop into a customer-supplied outlet and turn it on. The laptop IPL takes about 5 to 10 minutes.
5. At the login prompt, log in by entering either `service` or `root`.

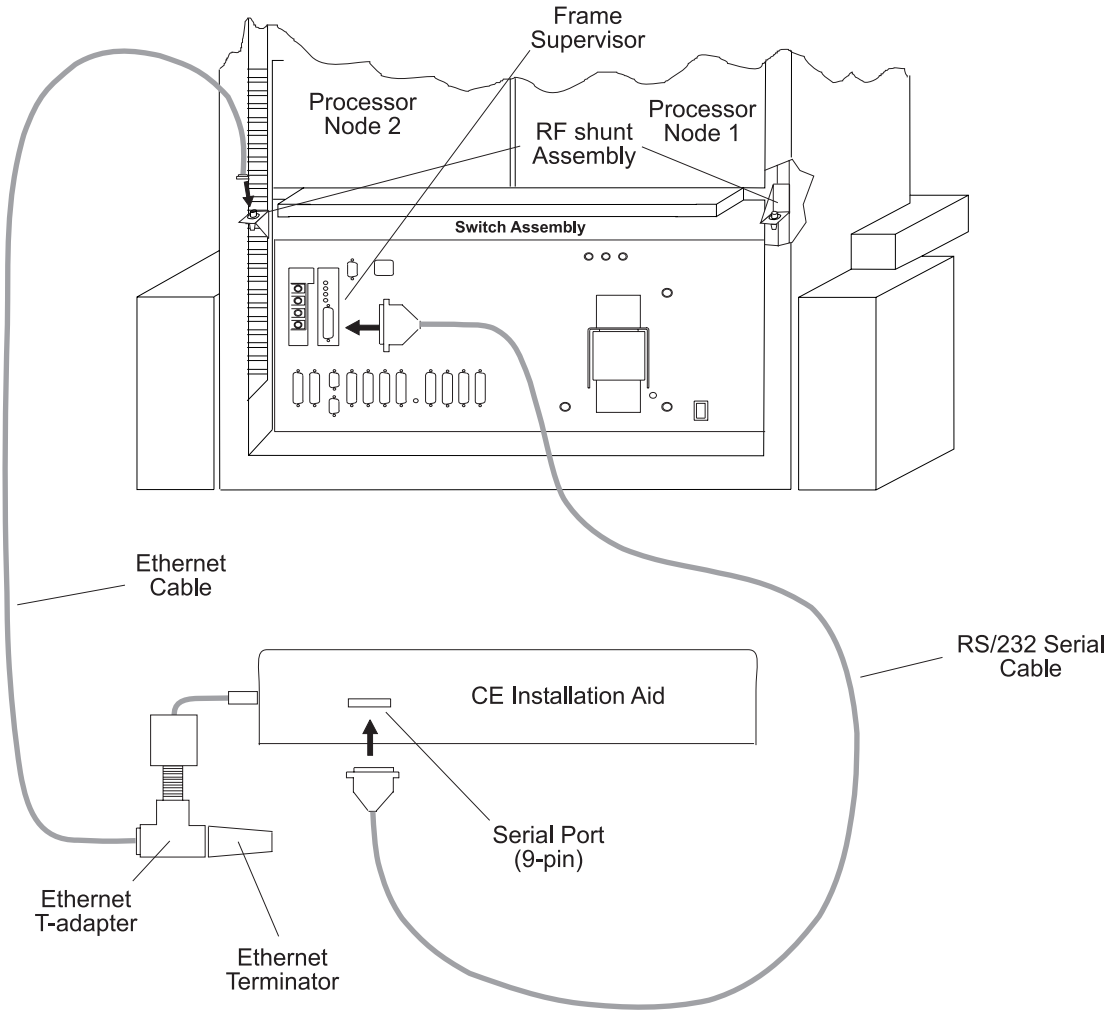

Figure 1-20. Connecting the CE Installation Aid (ThinkPad) to a frame

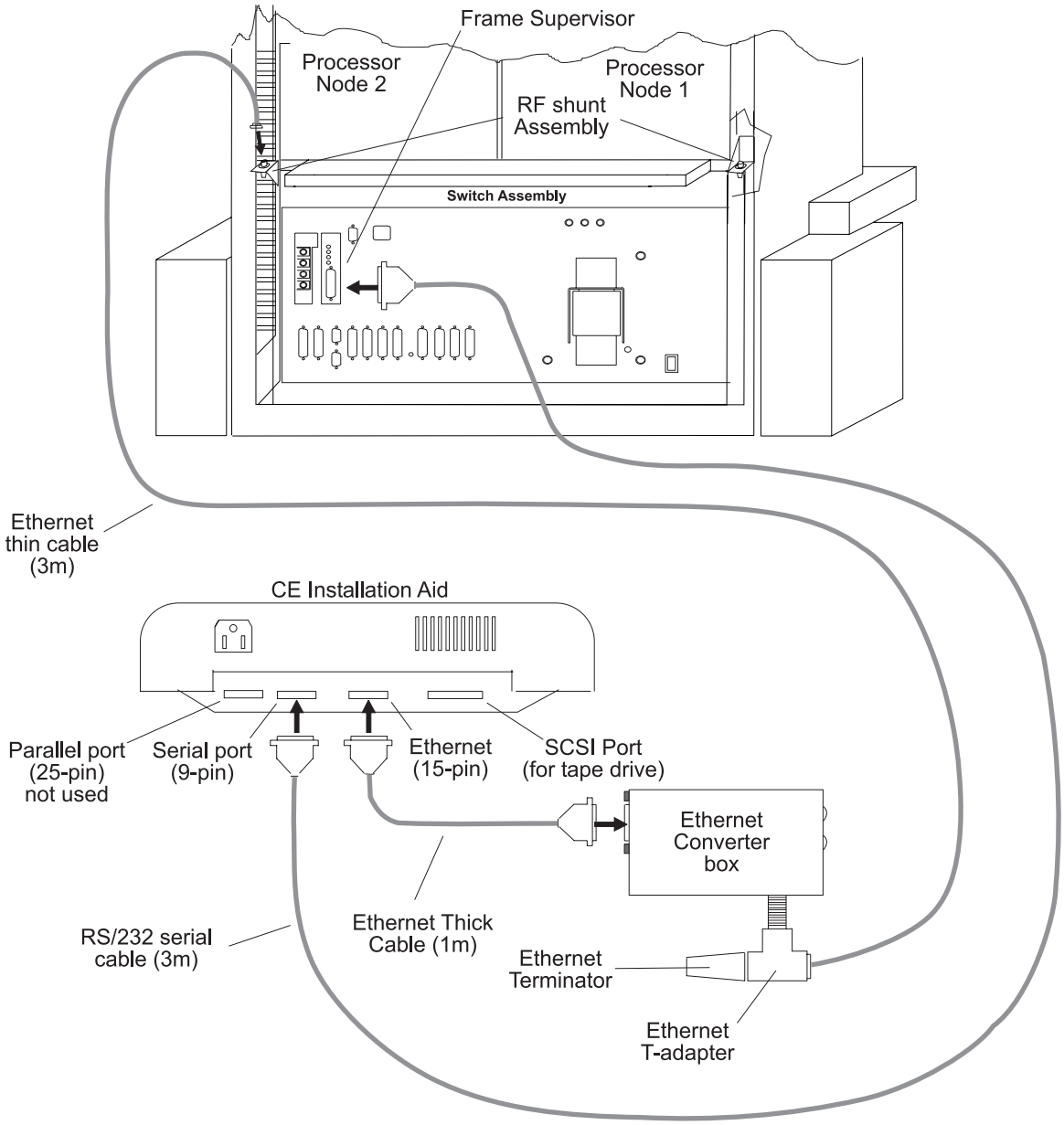

Figure 1-21. Connecting the CE Installation Aid (ACER) to a frame

Verifying a single SP frame (repeat for each frame)

Note: If a switch feature is installed in a multi-frame environment, ensure that Frame 1 is the ***first*** (SPS) frame of the system to be verified. Also, any expansion frames (F/C 1500, 1550, 1010/15/16/17/19) should be verified before their corresponding base frame (frame with switch). Verifying frames in ascending order for SPS (1-2-3-4-5) normally satisfies this requirement.

1. Check circuit breakers and power-sequence the frame:
   a. Ensure that main power switch is in the Off ('0') position.
   b. Ensure that the circuit breaker on each processor node and switch assembly (if present) is in the Off ('0') position.
   c. Remove the lockout condition to restore ac power connection for this frame.

d. Turn on the ac power for this frame.

e. Place the frame power switch in the On ('1') position.

f. Place the circuit breaker on each processor node and switch assembly (if present) in the On ('1') position.

g. Place the circuit breaker on the front of the switch assemblies (if present) in the On ('1') position.

2. Cable the CE Installation Aid laptop to the frame:

> **Note – Moving CE Installation Aid**
>
> If you need to physically move the CE Installation Aid laptop to another ac outlet, perform the following steps:
>
> a. From an available AIX window, perform the "**`shutdown -F`**" command, then wait for the "**`Halt completed`**" message or power-down completion.
>
> b. Turn off and un-cable the CE Installation Aid.
>
> c. Perform "Preparing the CE Installation Aid laptop" on page 1-37 again.

a. Connect the RS-232 cable from the CE Installation Aid laptop serial port to the frame supervisor (PDU-BH-J9).

b. If the nodes are using Ethernet thin coax LAN connection, connect the Ethernet thin cable either at the RF shunt assembly behind slot 2 or at the Y-adapter on processor node 1.

c. If the nodes are using Ethernet TTP LAN connection, connect the Ethernet TTP cable to the LAN concentrator (HUB).

3. From the **SP System Installation Menu**, select **New Frame Configuration** to configure the CE Installation Aid for this frame. From the **New Frame Configuration Menu**:

a. If prompted, enter the Kerberos password of **`root`**. Ensure that the mouse cursor is in the current window.

Note: If there is no switch feature, go directly to step 3d.

b. Select **Logical Frames** to modify the number of logical frames in the entire RS/6000 SP system.

Notes:

1) For frames with SPS-8, set the number of logical frames to "1".

2) If you enter 1-4 logical frames , the system should have no switch or single-stage switch. If you enter 6-8, the system should have dual-stage switch. If you enter 5 logical frames, you are prompted to select one of these two switch types..

c. Select **Logical Frame Number** to modify the logical frame number to match this frame. (If this is a multi-switch frame, this number does not matter.)

d. Select **Frame Type** to modify the frame type to match the frame.

Notes:

1) Frame types include:

SP1®: SP1 hardware installed using SP1 cabling, etc.

Base: SP frame (with switch) connected to one or more expansion frames

Expansion: SP frame with nodes directly attached to the switch assembly in a base frame

Standard: SP frame with processor nodes (not a base or expansion frame)

Multi-switch: SP frame with 4 or 8 switch assemblies (no nodes)

2) If you select **Expansion**, you are asked which frame (1, 2, or 3) and whether the switch in the base frame is an eight or 32-port switch.

e. Select **Boot Network Type** to modify the type of network used for performing a network boot of the node. Boot network types include:

bnc Ethernet thin COAX cable connection

tp Ethernet thin twisted-pair cable connection

dix Ethernet thick (15-pin) cable connection

f. Select **Autoconfiguration** to configure the CE Installation Aid for this frame. Information on the software and hardware status returns.

Note: If this step fails, look for any obvious connection or power problems. Then try repeating Autoconfiguration. If problems persist, call next level of support.

g. Type q to exit menu.

4. From the **SP System Installation Menu**, select **Verify Frame Controls** to verify frame status and control functions.

   Note: This step can be repeated at this point if necessary.

5. If this is a multi-switch frame, go to step 11 on page 1-43.
6. From the **SP System Installation Menu**, select **Gather Ethernet Hardware Addresses**. This step acquires the Ethernet hardware addresses specific to each processor node in this frame.

   Note: If this step fails on any processor nodes, retry this step again.

7. From the **SP System Installation Menu**, select **Start System Monitor** to start the system monitor.
8. Verify processor nodes:

   a. Check the frame to determine the number of processor nodes. Make sure that the values at the top of the **SP System Installation Menu** accurately reflect the current frame configuration.

      Note: If information is incorrect, use MAPs to isolate problem.

   b. Ensure the circuit breakers of the processor nodes are in the On ('1') position.

   c. From the **SP System Installation Menu**, select **Verify Processor Nodes**.

      The software will:

      - Verify communication to the frame, the processor nodes, and the switch assembly (if present).
      - Turn off processor nodes in this frame under program control.

      Note: You are prompted to boot the nodes automatically. If you answer "yes", go to step 8f on page 1-42.

   d. From the **Global Commands** window:

      1) Click on buttons to select processor nodes (see note below).
      2) Click on the **Net Boot** button.
      3) Click on the **Do command** button. Click on the **OK** button of popup window.

Note: The CE Installation Aid supports network boot of up to 6 processor nodes at the same time, so select up to 6 processor nodes, wait until they complete IPL, then repeat step with the next set of processor nodes.

e. From the **3DigitDisplay** window, verify that for each processor node selected above, the 3DigitDisplay is cycling through the IPL sequence.

f. Wait for the 3DigitDisplay to show one of the following conditions (for Thin or Wide nodes it should not take more than 10–15 minutes; for High nodes and 332 MHz nodes it might take up to 1.5 hours, depending on the configuration of the node):

- **uuu**: PASS - indicates that diagnostics passed on a non-SMP node.
- **0aaa**: PASS - indicates that diagnostics passed on an SMP node.
- **000**: FAIL - indicates that diagnostics found a problem.

  Action: Wait until next step to get report on failures.
- **Stuck on 231**: IPL PROBLEM - indicates problem with Ethernet IPL

  Action:
  – All nodes – Perform “Ethernet LAN Isolation Procedure” in *RS/6000 SP: System Service Guide*
  – Single nodes – Check T-adapter coax connection at the rear of the processor node for a loose connection.
- **Stuck on same value** more than 4 minutes or **Flashing 888**: HANG or CRASH - indicates a problem during IPL or diagnostics.

  Action: Perform the following steps until condition clears:
  1) Perform “Net Boot” on this processor node to see if problem clears.
  2) Use the MAPs in *RS/6000 SP: System Service Guide* to determine the problem.

g. From the **SP System Installation Menu**, select **Check Node Diagnostics** to check results of processor node verification. This can be done at any time, however you will get an error if no nodes have completed diagnostics.

9. If switch feature is installed, verify switch feature in this frame:

   Attention: This step will interfere with any customer use of the switch feature. If this frame is attached to other frames that are in use by the customer, get concurrence from the customer before continuing.

   Note: If you find any problems here, refer to the “Switch Function”MAP in *RS/6000 SP: SP Switch Service Guide* or *RS/6000 SP: SP Switch2 Service Guide* to correct.

   a. From the **SP System Installation Menu**, select **Verify Switch Feature** to verify the switch feature.

   b. From the **SP System Installation Menu**, select **Check Switch Diagnostics** to check the results of the switch feature verification.

   c. **Note:** This step requires that all switch cabling is installed.

      From the “**SP System Installation Menu**”, select “**Verify Switch Clocks**” to test the switch clock selection logic and any frame-to-frame switch clock cables. Follow directions given by the software.

10. Finishing the frame:

Attention: If this frame contains any switch adapters or switch assemblies, you must leave the frame, processor nodes, and switch assembly turned on until all frames have been verified. Successful verification of the switch network depends on correct settings left after frame verification by the CE Installation Aid.

a. From the **SP System Installation Menu**, select **Finish Frame** to perform required procedures following verification of each frame.

b. Disconnect the RS-232 line from the RS/6000 SP frame.

c. If attached, disconnect the Ethernet LAN cable from the frame or concentrator (HUB). This should be done at the Ethernet converter box if the customer's Ethernet Thin cable was used, or at the frame if the Installation Aid three meter (10 ft.) Ethernet Thin cable was used.

11. Record verification time for frame:
12. Repeat "Verifying a single SP frame (repeat for each frame)" on page 1-39 for each additional frame.
13. Record the installation complete for the System Serial Number.
14. Verification of the system is now complete.
15. Shutdown the CE Installation Aid laptop:

    a. From an available AIX window, perform the **`shutdown -F`** command, then wait for the **`Halt completed`** message.

    b. Turn off, uncable, and repack the laptop for return.

    c. Ensure that you return the CE Installation Aid laptop kit.

Connecting RS-232 and Ethernet LAN cables

1. Connect the RS-232 cable to the frame supervisor card inside the rear of the frame (PDU-BH-J9 or SEPBU-BH-J9).

   Note: Some SP-Attached Servers may have additional RS-232 or RS-422 connection requirements. Refer to the server specific documentation and @server *Cluster 1600: Hardware Planning, Installation, and Service* for details on connecting these components.

2. Connecting twisted-pair (UTP) Ethernet LAN cable:

   Note: UTP cables and concentrator are customer-supplied hardware and are not shipped with the RS/6000 SP.

   a. If necessary, install a transceiver to the D-shell connector of the appropriate Ethernet card.

   b. Connect one end of the UTP LAN cable at the transceiver or adapter of the appropriate Ethernet card.

   c. Connect the other end of the UTP LAN cable to the customer's Ethernet concentrator.

   d. Ensure there is a connection from the customer's Ethernet concentrator to the control workstation.

3. Connecting coax (BNC) Ethernet LAN cable:

   a. Connect one end of the coax LAN cable to the Ethernet RF shunt at the rear of the bottom node drawer.

   b. Connect the other end of the coax LAN cable to the rear of the control workstation.

   c. Ensure that the Ethernet LAN is terminated both inside and outside the RS/6000 frame; check for a 50-ohm terminator on a Y-adapter at both ends of the Ethernet LAN.

4. Connecting Thick Ethernet LAN cable:
   a. Connect one end of the LAN cable at the D-shell connector of the appropriate Ethernet card.
   b. Connect the other end of the LAN cable to the customer's Ethernet concentrator.
   c. Ensure there is a connection from the customer's Ethernet concentrator to the control workstation.
5. Perform the "Ethernet LAN Isolation Procedure" in *RS/6000 SP: System Service Guide* to check for any Ethernet problems.

Verifying nodes and switches using the customer configuration

Notes

- This procedure requires that all base PSSP software is properly installed on the control workstation, including all of the required configuration steps. To verify proper PSSP installation, refer to *RS/6000 SP: SMP Thin and Wide Node Service Guide*, GA22-7347. If the software is not fully configured, you might experience problems performing this verification procedure.
- You need access to the "root" password. The customer can enter it as required.
- Problems found during software installation and configuration might be due to software, user configuration, or hardware problems. If you are unsure of the cause, contact the next level of support for assistance.

1. Ensure that the RS/6000 SP system is ready for verification by checking with the customer or system administrator:
   a. Ensure that the AIX and PSSP software is installed and configured on the system, including the processor nodes.
   b. Ensure that all frames, switches, processor nodes, and SP-Attached Servers to be tested are not in use by the customer or software installation group.
   c. Ensure that all frames, processor nodes, and switches are turned on.
2. Ensure that the customer grants the proper permissions to allow "dsh" commands to work.
3. Verify processor nodes as follows:
   a. Change directory by entering **cd /usr/lpp/ssp/cediags/cws**.
   b. Start diagnostic tests on nodes using one of the following methods:
      1) Enter **diag.dsh -a** to test all nodes in the current system partition.
      2) Enter **diag.dsh -w**, ***hostname1***, ***hostname2***, **...** to test one or more nodes specified by the hostname list.
      3) Use "diag.dsh" with other valid "dsh" command flags if appropriate. Entering **diag.dsh**with no parameters returns information on command usage.
   c. Wait for the diagnostic results from the nodes. Output will appear on the screen as well as in a file on the workstation.
   d. Check results of diagnostics by entering **pg /tmp/diag.client.out**.
   e. For any problems shown in the file, use MAPs or run diagnostics on the processor nodes.
4. If installed, verify switch feature:

a. Refer to the “Selecting Appropriate Switch Clocks” procedure in the “Selecting Appropriate Switch Clocks” section of the *RS/6000 SP: SP Switch Service Guide* or *RS/6000 SP: SP Switch2 Service Guide*, Chapter 2 to make sure clocks on all switch assemblies are set properly.

b. Have customer verify that the correct switch topology file has been selected.

c. From Perspectives window on the control workstation, enter

```
Eunfence
```

for the processor node(s) and/or SP-Attached Server(s) added to the switch.

If this is unsuccessful, or the switch was not previously available, enter:

```
Estart
```

to restart the switch.

d. Determine the primary node number. From an AIX window on the control workstation, enter:

```
Eprimary
```

e. Determine the hostname for this node by checking *reliable_hostname* for node# from command:

```
splstdata -n | pg
```

f. Log onto the primary node with userID of “root”:

```
telnet hostname
```

g. Check the results in file “/var/adm/SPlogs/css/out.top”:

```
pg  /var/adm/SPlogs/css/out.top
```

h. If there are any obvious problems (such as primary processor node is unavailable or switch assembly is turned off), address those problems first, then repeat “Eunfence”/“Estart” step.

i. If any hardware problems are found (such as processor node problems or problems in “/var/adm/SPlogs/css/out.top”), use the MAPs in *RS/6000 SP: System Service Guide* to perform service on the system.

j. If this is a single-frame system, verification is now complete. A green ″switch_responds″ indicator will be lit for the processor node(s) or SP-Attached Server(s).

5. If switch feature is present and this is a multi-frame system, verify switch feature clocks (optional):

a. Refer to the “Determining Switch Clock Source” procedure in the “Selecting Appropriate Switch Clocks” section in *RS/6000 SP: System Service Guide* , Chapter 2 for instructions on determining and selecting switch master clocks.

b. After determining the current master clock selection, use the procedure to select a new master clock for the system.

c. From an AIX window on the control workstation, reinitialize the switch adapter on all nodes by entering:

```
dsh -a /usr/lpp/ssp/css/css_restart_node
```

d. From an AIX window on the control workstation, enter:

```
Estart
```

e. Log onto the primary node as “root”.

f. Check the results in file “/var/adm/SPlogs/css/out.top”:

```
pg  /var/adm/SPlogs/css/out.top
```

g. If you see one or more switch assemblies where all ports show errors, there is most likely a clocking problem between the clock source of the switch(es) and that switch(es). Use the “Switch Function” MAP in *RS/6000 SP: SP Switch Service Guide* or *RS/6000 SP: SP Switch2 Service Guide* to perform service.

h. Repeat this procedure with another master clock.

i. At the customer’s discretion, leave the clock configuration at its current setting or set it back to the original configuration.

6. Verification is now complete.

Installing the high availability control workstation (HACWS)

1. Route both RS-232 cables from the SP frame to both customer control workstations.
2. Connect both RS-232 cables to the Y serial cable and install in frame supervisor card (PDU-BH-J9).
3. To connect the Ethernet LAN from the frame(s) to both control workstations, refer to “Connecting RS-232 and Ethernet LAN cables” on page 1-43.

   Note: HACWS requires additional shared disk hardware external to the control workstations. Check with the customer concerning installation requirements.

4. Perform the “Ethernet LAN Isolation Procedure” in *RS/6000 SP: System Service Guide* to check for any Ethernet problems.

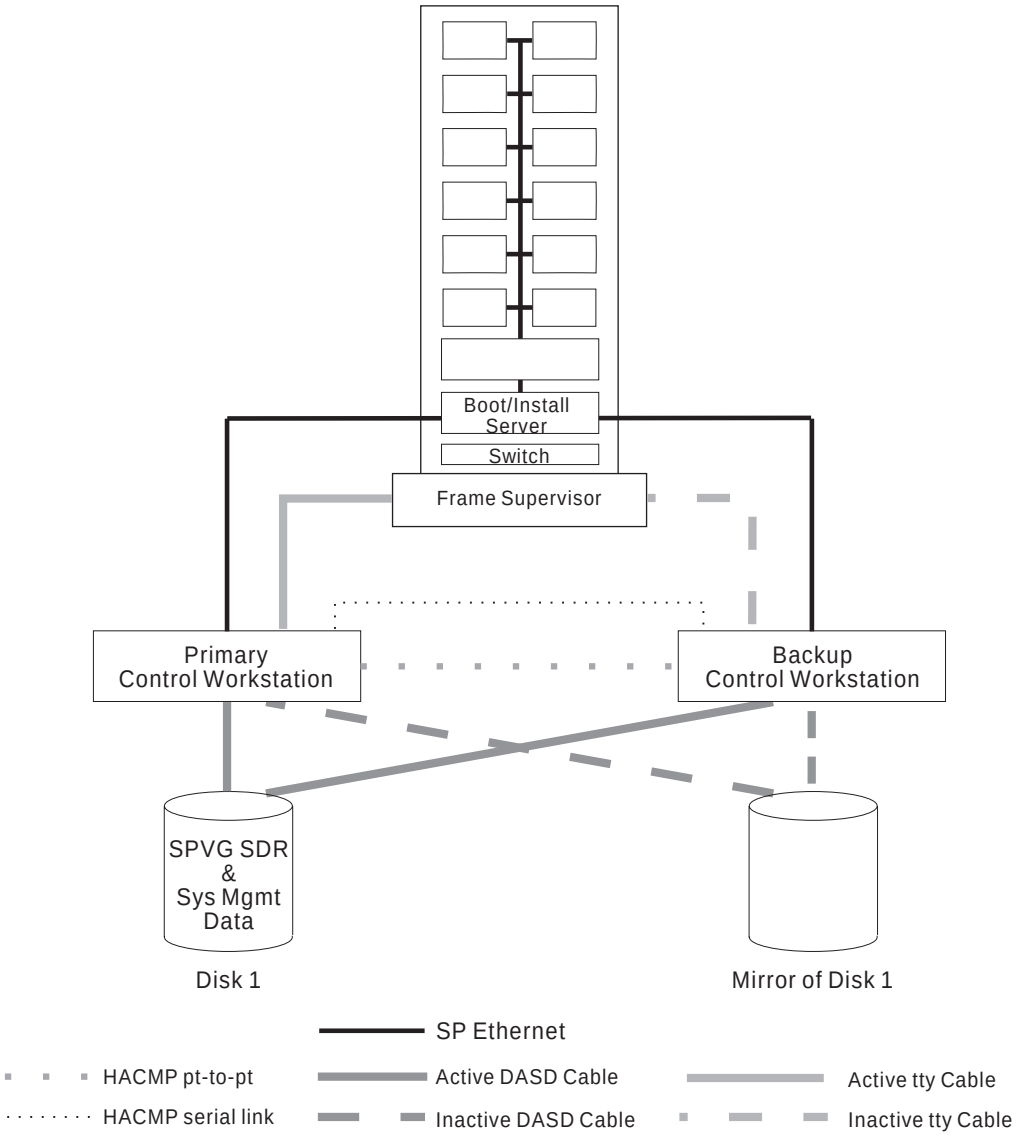

Figure 1-22. Cabling the high availability workstation (HACWS)

Installing the Hardware Management Console (HMC)

Some SP-Attached Servers require a Hardware Management Console (HMC). For installation instructions related to this component, refer to the server specific documentation and @server *Cluster 1600: Hardware Planning, Installation, and Service*.

Reconfiguring Ethernet LANs

If a customer needs to reconfigure 10Base-2 (BNC coax) LANs in their RS/6000 SP system, you must use the RF Shunt assemblies described as follows:

- Ensure that the incoming internal Ethernet cables to the Ethernet LAN go through the RF Shunt assembly. (The assembly is labelled in the “Rear View of Frame Locations” figure located in *RS/6000 SP: System Service Guide*.) There are a total of 4 RF Shunt assemblies provided for each frame.

Attaching the 9077 SP Switch Router

To attach and configure a 9077 SP Switch Router, see *SP Switch Router Adapter Guide*.

RS/6000 SP power control interface function

If the customer plans to use the power control interface function, read the following section. Otherwise, refer to the “No Power Control Interface” section in “Typical configurations”.

The RS/6000 SP SEPBU power unit contains a Power Control Interface card. This card has a AUX/LOC switch, two MAIN output jacks (+15 V, 0.8 A maximum), and two AUX input jacks (+10 to +30 V, 20 mA maximum).

The Auxiliary/Local (AUX/LOC) switch sets the power control for a frame as follows:

- **AUX** – In the AUX position, the frame main power switch has no effect. Power on/off signals arriving at the AUX jacks from another source control the SEPBU.
- **LOC** – In the LOC position, the frame main power switch controls the frame SEPBU; signals to the AUX input jacks have no effect. Signals sent to the MAIN jack outputs can control external devices including other frame SEPBUs.

Typical configurations

The following Power Control Interface configurations illustrate typical uses of this function. You can use one or more of these configuration types. Note that using the Power Control Interface function can affect certain outages and service operations; take this into consideration as you plan your configuration.

No Power Control Interface Control

The Power Control Interface switches of all RS/6000 SP frames are in the LOC position. No cabling is necessary. Power control of each frame and attached unit is independent of all other units.

RS/6000 SP Chained Control

First RS/6000 SP frame has Power Control Interface switch in the LOC position; all other RS/6000 SP frames have Power Control Interface switches in the AUX position. A Power Control Interface cable is run from the MAIN jack in the first frame to a AUX jack in the second frame. Another Power Control Interface cable is run from the MAIN jack in the second frame to a AUX jack in third frame, and so on.

Powering on/off the first RS/6000 SP frame controls power of all other attached frames. Note that this can affect how certain outages or service operations impact the system operation.

RS/6000 SP Cross-Control

All RS/6000 SP frames have Power Control Interface switches in the AUX position. A Power Control Interface cable is run from the MAIN jack in each frame to an AUX jack in another frame.

Powering on/off any RS/6000 SP frame controls power of all other attached frames. Note that this can affect how certain outages or service operations impact the system operation.

RS/6000 SP Control of Peripherals

A Power Control Interface cable is run from RS/6000 SP frame MAIN jack to a AUX jack on the peripheral Power Control Interface panel. Powering on/off this frame will have the corresponding effect on any attached peripherals. If the peripheral is connected to processors in more than one RS/6000 SP frame, certain outages or service operations might have an undesirable impact on the system operation. In other cases, this can allow proper power synchronization of the processing units with their respective peripherals.

Post-installation tasks

Review safety check

1. Verify that all components are in their home position and that all covers are in place.
2. Clean up the area surrounding the RS/6000 SP system. Make sure all materials and components which are no longer required are returned or discarded.

Removing POWER3 SMP High Node shipping brackets

1. From the front of the frame, at both sides of the node, remove the shipping bracket mounting screws from the chassis side-walls. Remove the mounting screws which secure the brackets to the EIA rails and remove the brackets.
2. From the rear of the frame, at both sides of the node, remove the mounting screws that secure the shipping brackets to the EIA rails. If necessary, disengage the clevis pins at the rear of the node telescoping tracks.
3. Release the node locking lever and pull the node out towards its rear service position just enough to gain access to the bracket side-wall screws. Remove the shipping bracket mounting screws from the chassis side-walls and remove the brackets.
4. Place the node back into its operational position and engage the locking lever.
5. Leave in place the EIA rail nut-clips for future re-installation of the shipping brackets.
6. Retain the four shipping brackets and their 16 mounting screws with the shipping group for future re-installation.

Storing the shipping group

Use the shipping group packing lists to inventory the parts, special tools, and manuals used during installation. Store all the items properly and file the packing lists in the front of this manual. The packing lists are to be used to inventory the manuals and tools for future relocation or removal.

Note: Keep all part identification tags with the items so that they can be easily identified when needed for maintenance.

Returning the CE Installation Aid laptop

If you ordered the CE Installation Aid laptop, perform the following steps upon completion of the install:

1. Ensure all contents received in the kit are included for the return.
2. Return the CE Installation Aid kit as soon as possible for reuse on future installs. Refer to “Ordering the RS/6000 SP CE Installation Aid kit” on page 1-4 for more information.

Acquiring VPD data from the RS/6000 SP

The following information explains how to acquire Vital Product Data (VPD) from the RS/6000 SP. IBM Service Representatives can find more information about “How to get reliable VPD on RS/6000 SP — 9076” from the AIXTOOLS disk. Use the following command to get the current version of the SP2VPD PACKAGE:

```
TOOLCAT AIXTOOLS GET SP2VPD PACKAGE
```

Note: If nodes have been moved, there might still be “shadows” of the old configuration in the SDR. The **/usr/lpp/ssp/bin/spdelnode** can be used to delete node information from the SDR. Also, the SMIT panels can be used via the **fast_path: smit delete_data**. These commands should only be used by someone familiar with the SDR and the machine configuration.

Every time a node is booted, the **/usr/lpp/ssp/install/bin/save_config** program is executed on the node. This program copies the VPD information from the node to the directory **/var/adm/SPlogs/SPconfig** on the control workstation. However, in some instances this information might not be valid. In particular, if an adapter was installed in the node but the device driver for the adapter was not present at the time the node was booted, then the VPD data will not show this adapter. Also, the **/var/adm/SPlogs/SPconfig** directory might have **umlc** files for old configurations.

Guaranteeing accurate VPD data

1. Correct the node information in the SDR.
2. Make sure that all adapters configure properly.
3. On the control workstation, erase all the **umlc** files in **/var/adm/SPlogs/SPconfig** with a command sequence such as the following:

   ```
   rm /var/adm/SPlogs/SPconfig/*umlc
   rm /var/adm/SPlogs/SPconfig/*lscfg
   ```

4. When all the nodes are booted, rerun the **save_config** command on the nodes to get “fresh” VPD with a command such as the following:

   ```
   dsh -avG "/usr/lpp/ssp/install/bin/save_config"
   ```

   (Eliminate the G flag for PSSP systems prior to 2.1)
5. Verify that there are **umlc** files in **/var/adm/SPlogs/SPconfig** on the control workstation for each node, that the files are not empty (not size 0 bytes) and that they can be viewed as plain text.
6. Continue with the following procedures to collect the VPD data.

Collecting the VPD data

1. On the CWS command line, enter the following:
   - For Domestic systems - **/usr/lpp/ssp/install/bin/get_vpd -s0200xxxxx -myyy**
   - For EMEA systems - **/usr/lpp/ssp/install/bin/get_vpd -s5100xxxxx -myyy**

     Where:

     xxxxx = last 5 digits of serial number of Frame 1
     yyy = model number of Frame 1; for example, 550
2. ***If the CWS has a 1.44MB diskette drive***, insert a 1.44MB diskette in drive A: On the CWS command line, enter **dosformat**.
3. ***If the CWS has a 2.88MB drive***, the disk will be formatted as such, and thus cannot be read on your laptop. For a 2.88MB drive, enter **dosformat /dev/fd0.18**. The diskette will format correctly to read on the 1.44MB drive on your laptop.

4. On the CWS command line, enter the following:
   - For Domestic systems - **doswrite -a /var/adm/SPlogs/SPconfig/0200xxxxx.vpd xxxxx.vpd**
   - For EMEA systems - **doswrite -a /var/adm/SPlogs/SPconfig/5100xxxxx.vpd xxxxx.vpd**

     Where:

     xxxxx = last 5 digits of serial number of Frame 1

     Note: Be sure to enter the upper-case letters in this command.

If this procedure fails to gather all node data, or if you encounter any problems with completing this command successfully, contact Software Support at 1-800-CALL-AIX to report the problem and obtain resolution. W/T personnel should contact their respective software support.

Transferring the VPD data to your VM id

1. Insert the DOS-formatted diskette containing VPD data in **drive a:** on your MOst
2. Select **HOST SESSIONS** and log on to your VM id
3. Select the **Transfer** toolbar option
4. Select **Send Files to Host**
5. Select **Drives = a:**
6. Click on the file you want to send to host
7. In **PC Files**, **a:\xxxxx.vpd** should display (if not, enter manually)
8. In **Host File**, enter **xxxxx vpd a** (delete “bin” from the filetype)
9. In **Transfer Type**, select **TEXT**
10. Click the **SEND** button

Transferring the VPD data to PKMFGVM4

1. On the MOst VM command line, enter **FULIST**
2. The file should be on the “A” disk of your VM id
3. If successful, the correct file is listed
4. Position your cursor on the file and enter **SF / VPDTRAN at PKMFGVM4**
5. Press <Enter> to send the file

Recording hardware service data

After you install an RS/6000 SP system or component, you can use the following worksheet to record frame, node, and control workstation information. Copy this worksheet and locate it in a convenient place where the customer can keep the information current. This information can then be used when requesting hardware service.

Magnetic frame-numbering labels are included in the ship group. The customer can attach these labels to the frames for help in identifying a particular frame.

Copy this page, then cut along dotted line

IBM RS/6000 SP

For Hardware Service in North America
call 1-800-IBM SERV

For W/T Hardware Service
call _____

Customer # _____

Control Workstation:

M/T _____ Serial # _____ Model # _____

Frames:

M/T 9076 Model # _____

Serial #	Frame # / Node #	to	Frame # / Node #
_____	_____ / _____		_____ / _____
_____	_____ / _____		_____ / _____
_____	_____ / _____		_____ / _____
_____	_____ / _____		_____ / _____
_____	_____ / _____		_____ / _____

Copy this page, then cut along dotted line

Chapter 2. Relocation procedures

The following procedures help prepare the RS/6000 SP system for physical relocation (field transfer). For a move within an account, modify the procedures as appropriate.

Attention: When relocating machines, special requirements must be met. Failure to comply with special packing and other requirements can result in damage to the equipment and might create a stability hazard. Do not proceed without the correct special packing, equipment, and instructions provided by the machine packaging bill of material.

Two service representatives can prepare a RS/6000 SP system for relocation in approximately three hours per frame.

Special tools and equipment

- Leveling pad wrench (**P/N 8309875**) (if leveling pads are installed)
- CE Installation Aid kit if required for testing; see “Ordering the RS/6000 SP CE Installation Aid kit” on page 1-4
- 5.5 mm socket, required to service some RS/6000 SP nodes
- T10 TORX bit (**P/N 93F2834**), for SP Expansion I/O Units
- T20 TORX bit (**P/N 93F2836**), for some SMP thin and wide nodes
- Lift tool kit (**P/N 05N0523**), for POWER3 High Nodes (return after use)

Testing SP systems before field transfer

IBM recommends that diagnostics be run before disassembly for those machines that are to be transferred to another field location.

You can use one of the diagnostic procedures in “Performing RS/6000 SP System power-on and verification” on page 1-30.

Ordering packing materials for shipment

SP system frames and components being moved or discontinued must be correctly packaged before shipment. Packing materials must be ordered from branch office DP Orders and Movements at least 45 days before the anticipated removal date.

Order the appropriate frame packing bills of material or node cartons using the part numbers listed in Table 2-1. For packing materials used outside of the USA, consult your local packaging specifications.

Note: If you are moving POWER3 High Nodes, be certain to also order the Lift Tool kit (**P/N 05N0522**). The Lift Tool must be returned after use.

Table 2-1. SP frame packing bills of material and node cartons

SP system component	Bill of material P/N
1.93 m (76 in.) frame	7335109
1.93 m (76 in.) frame ARBO	7335143
1.93 m (76 in.) frame ARBO (China only)	7335290
1.93 m – Height-reduced (RPQ 8P2122)	7335207

Table 2-1. SP frame packing bills of material and node cartons (continued)

SP system component	Bill of material P/N
1.36 m (54 in.) frame	7335331
1.25 m (49 in.) frame	7334832
2.01 m (79 in.) frame (soft-pack kit)	7335469
2.01 m (79 in.) frame (ARBO kit, see Note 1)	7334604
2.01 m – Height-reduced (marine frame RPQ)	7334866
POWER3 High Nodes	7335357
POWER3 High Node shipping bracket kit (see Note 2)	09P2081
POWER3 Wide Node	7334637
332 MHz Wide Node	7334930
POWER3 and 332 MHz Thin Node (1 node carton)	7334773
POWER3 and 332 MHz Thin Node (2 node carton)	7334603
200 MHz High Node	7334978
135 MHz Wide Node	7334637
120 MHz and 160 MHz Thin Nodes (2 node carton)	7334773
Switch assembly	7334496
High-voltage transformer	7334605
SP Expansion I/O Unit (1 unit carton)	7335292
SP Expansion I/O Unit (2 unit carton)	7335298

Notes:

1. P/N 7334604 consists of two ARBO shipping containers; one for the covers, one for the frame.
2. Kit contains four shipping brackets, 16 mounting screws, and eight nut-clips. Use to secure all POWER3 SMP High Nodes in their frames for shipping.

Preparing frames for shipment

Perform the following procedure to prepare the RS/6000 SP frame for shipment to another location:

1. Verify RS/6000 SP hardware. Use customer equipment or CE Installation Aid. Refer to “Performing RS/6000 SP System power-on and verification” on page 1-30, to perform procedures.
2. Turn off the processor nodes from the control workstation.
3. Turn off the RS/6000 SP frame by switching the main power switch to the Off (’0’) position, then:
   - For frames with SEPBU, disconnect the ac power cables at the rear of the SEPBUs. For more information, refer to “Removing the SEPBU ac power cable” in *RS/6000 SP: System Service Guide* .
   - For frames with PDU, place the circuit breaker at the rear of the PDU in the off position

DANGER

The frame main circuit breaker and the controller must not be switched on again from this point on.

Before disconnecting the power cables from the power receptacles, ensure that the customer's branch distribution circuit breakers (customer power source circuit breakers) are off and tagged with "DO NOT OPERATE" tags, S229-0237. Refer to the "Lockout/Tagout" procedures in *RS/6000 SP: System Service Guide* **, before proceeding.**

4. Disconnect the frame main power power cables from the ac power receptacles or connectors.
5. Prepare the ac power cables for relocation:
   - For frames with SEPBU, pack the ac power cables with the ship group.
   - For frames with PDU, pull ac power cable upward and tie inside the rear of the frame.
6. Disconnect Ethernet LAN cables and the RS-232 cable to the customer's control workstation for each RS/6000 SP frame. Refer to "Installing skirts, frame covers, and main power switch" on page 1-28.
7. Disconnect any optional communication adapter cables exiting the frame.
8. Disconnect frame-to-frame switch cables.
9. To avoid shipping damage, you must secure all POWER3 SMP High Nodes into their frames with shipping brackets. If any of the shipping brackets and their mounting screws in the ship group or any of their associated nut-clips on the EIA rails are missing, order one shipping bracket kit, **P/N 09P2081** for each node as necessary. For shipping bracket installation instructions, see "Installing POWER3 SMP High Node shipping brackets".
10. To avoid shipping damage, you must remove all ESCON® and HIPPI Micro Channel adapters from processor nodes and pack them in anti-static packaging. If there was no shock absorber for the HiPS adapter, you must also remove all HiPS adapters.
11. Refer to "Installing frame side covers" on page 1-9, and reverse the installation procedures to remove the RS/6000 SP covers before packing.
12. Refer to "Installing the stability foot and wheel chocks" on page 1-16 (and "Installing frame tie-down hardware" on page 1-17, if necessary) and reverse the installation procedures.
13. Check that the hold-down screws on the node front decorative covers are securely fastening all processor nodes.
14. Repack ship group, using the packing list that is stored in the front of this manual.
15. Pack frame in wooden frame container (if applicable).
16. Pack covers in separate wooden cover container (if applicable).

    Note: The covers on the 1.93 m and 1.25 m frames remain on the frames for shipment.

Installing POWER3 SMP High Node shipping brackets

1. Ensure that the nut-clips for the shipping bracket mounting screws are installed at the EIA rail positions indicated in Table 2-2 on page 2-4.

Table 2-2. POWER3 SMP High Node shipping bracket nut-clip positions

	EIA rail nut-clip position	
Node location in frame	**Upper**	**Lower**
1	3 holes above 12	4 holes above 10
5	3 holes above 20	4 holes above 18
9	3 holes above 28	4 holes above 26
15	3 holes above 36	4 holes above 34

2. As you install each shipping bracket in the following steps, orient the bracket with its long dimension held vertically, the horizontally-slotted leg nearest the side-wall of the node chassis, and the vertically-slotted leg nearest the EIA rail.
3. From the rear of the frame, release the node locking lever and pull the node out toward its rear service position just enough to gain access to the bracket side-wall mounting screw holes. On both sides of the node, align the shipping bracket slots to the chassis side-wall screw holes and install and lightly tighten the mounting screws.
4. Place the node back into its operational position in the frame. Slide each bracket into contact with the EIA rail, install the rail mounting screws into the nut-clips, and then tighten all the screws in the bracket.
5. From the front of the frame, on both sides of the node, align the slots of both brackets to the EIA rail nut-clips, install and lightly tighten the mounting screws.
6. Adjust the height of each bracket to the chassis side-wall screw holes, install the mounting screws, and then tighten all the screws in the bracket.

Updating records to complete the relocation

Complete the relocation by performing the following:

1. Notify the branch office when the system is prepared for shipment.
2. Ensure that all cables, manuals, and units are shipped.

Chapter 3. Maintenance agreement inspection procedure

Introduction

This chapter contains information required by the IBM service representative when inspecting a RS/6000 SP for the following:

- A maintenance agreement qualification
- An equipment alteration or attachment review

This chapter includes a list of preparatory items, a general checklist guide, and illustrations of the safety labels which must be mounted in the RS/6000 SP frames.

Preparation

1. Before you proceed through the checklist, switch off power to the RS/6000 SP, and unplug the ac power cord from the electrical outlet
2. Have copies of CEMs (ECAs and SAs) for this machine type available for reference

Note: This book does not cover all the possible machine configurations, such as special features and RPQs. If you encounter a machine with RPQs or features that are not described in this book, use the instructions provided for the applicable RPQ or feature.

General checklist guides

The intent of this inspection procedure is to help you identify potentially unsafe conditions on machines you are inspecting. At the time of manufacture, each machine has the required safety items installed to protect the owners, operators, and service personnel from injury.

Before you switch on machine power, perform the following checklist procedure. If any apparent unsafe conditions are present, you must determine how serious the hazard is and decide whether to continue without first correcting the problem.

Consider the following conditions and the safety hazards they can cause:

- Electrical; especially primary power. For example, a “hot” frame can cause serious or fatal electric shock
- Explosive. For example, bulging capacitors can result in serious injury
- Use of chemicals, cleaning solutions, or solvents not specifically recommended by IBM

Checklist

Check ac power:

__ • Perform “Lockout Procedures” in *RS/6000 SP: System Service Guide*, Chapter 1, to remove power to the frame.

__ • Check that the power cord is not frayed or damaged.

__ • Check that the power cord is correctly connected to the power supply.

Check inside the machine:

__ • Check for any non-IBM alterations. If there are any, has the *R009, Non-IBM Alteration/Attachment Survey* been completed?

__ • Check for any broken or loose parts or assemblies.

__ • Check all fasteners and screws that secure the power supply assembly, fans, and covers.

Check for machine safety labels:

__ • Ensure that all required safety labels are correctly attached and legible; for reference, see “Safety and information labels and locations”.

Check for system functionality:

__ • Review and inventory the ship group packing list that is stored in front of this manual.

__ • Perform the procedures in “Performing the 50/60-Hz power receptacle safety check” on page 1-5.

__ • Perform the procedures in “Verifying nodes and switches using the customer configuration” on page 1-44.

Safety and information labels and locations

Labels on all frames

The safety label shown in Figure 3-1 is located 40 inches from the floor, on the left and right front inside edges of the frame. It is also located inside the back door, on the top center of the frame.

Figure 3-1. Safety label–Trained service personnel only

On 1.93 and 2.01 m frames, the information label shown in Figure 3-2 is located on the front filter bracket and rear left vertical frame member. On 1.25 m frames with single-phase power, it is located on the rear cover and on the rear left vertical frame member.

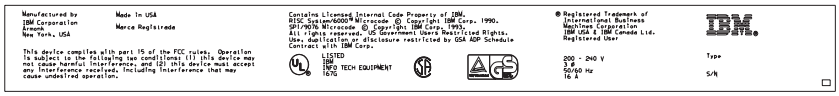

Figure 3-2. Information label–RS/6000 SP frame

Figure 3-3. Weight label–RS/6000 SP frame

Labels only on frames equipped with SEPBU

The safety label similar to the one shown in Figure 3-4 is located on the SEPBU chassis inside each power module slot. It is also located on panels covering unused module slots and on the right front of the SEPBU power chassis. The label contains translations into other national languages.

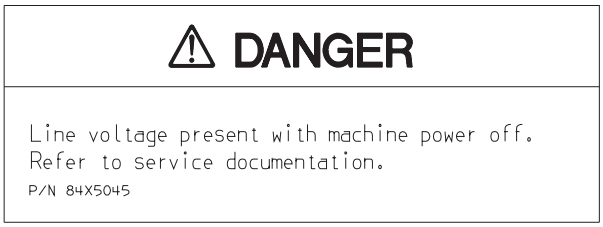

Figure 3-4. Safety label–Line voltage present

The safety label shown in Figure 3-5 on page 3-4 is located on the inside rear floor of the frame.

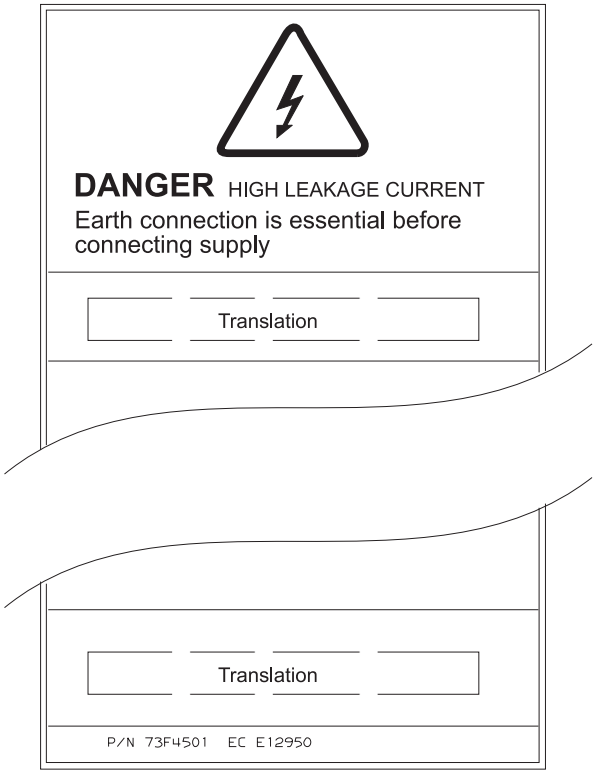

Figure 3-5. Safety label–High leakage current

The safety label shown in Figure 3-6 is located on the top side of the ac cover on the rear panel bulkhead.

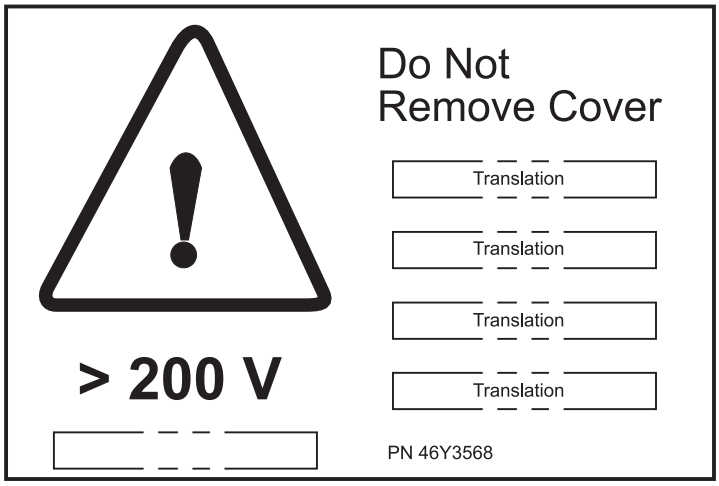

Figure 3-6. Safety label–Do not remove cover

Labels only on frames with the redundant power supply feature

The safety label shown in Figure 3-7 on page 3-5 is located on the floor of the frame, beneath the ac power cable connectors on the SEPBU enclosure.

This unit has multiple power cords. Refer to the service manual for power off instructions.

تحتوي هذه الوحدة على وصلات الطاقة، راجع
كتيب الخدمة للحصول على تعليمات ايقاف التشغيل .

Esta unidade possui vários cabos elétricos. Consulte o manual de assistência técnica para obter instruções sobre o desligamento de energia.

此单元有多根电源线。请参考服务手册，
获得关闭电源的指令。

本裝置具有多條電源線。請參閱維修手冊的
電源關閉說明。

Ova jedinica ima viöestruke strujne kablove. Pogledajte priruËnik za servisiranje radi uputa o iskljuËivanju.

Jednotka má více napájecích šňůr. Instrukce k vypnutí naleznete v servisní příručce.

Enheden har flere netledninger. Servicevejledningen indeholder oplysninger om, hvordan du slukker for enheden.

Deze eenheid heeft meerdere netsnoeren. Raadpleeg de servicehandleiding voor het uitschakelen van de stroom.

Tässä yksikössä on useita verkkojohtoja. Lisätietoja virrankatkaisusta on huolto-oppaassa.

Cette unité possède plusieurs cordons d'alimentation. Pour connaître les instructions de mise hors tension, consultez le manuel de maintenance.

Diese Einheit verfügt über mehr als ein Netzkabel. Anweisungen zum Ausschalten enthält das Wartungshandbuch.

Η μονάδα αυτή έχει περισσότερα από ένα καλώδια ρεύματος. Ανατρέξτε στο εγχειρίδιο συντήρησης για οδηγίες σχετικά με τη διακοπή της τροφοδοσίας.

ליחידה זו יש כמה כבלי חשמל. ראו
הוראות כיבוי במדריך השירות.

Ennek az egységnek több tápkábele van. Olvassa el a szerviz kézikönyv kikapcsoláshoz szükséges tudnivalóit!

Questa unità dispone di vari cavi di alimentazione. Consultare il manuale di assistenza per istruzioni.

この装置には複数の電源コードが使用されています。
電源をオフにするにはサービス・マニュアルを参照
してください。

이 장치에는 여러 개의 전원 코드가 있습니다.
전원 공급 차단에 대해서는 서비스 매뉴얼을
참조하십시오.

Denne enheten har flere nettkabler. Slå opp i servicehåndboken for å få instruksjoner om hvordan du slår av maskinen.

Ta jednostka posiada wiele kabli zasilających. Instrukcje dotyczące wyłączenia zasilania można znaleźć w podręczniku serwisowym.

Esta unidade dispõe de diversos cabos de alimentação. Consulte o manual de assistência para obter instruções para desligar.

К этому блоку присоединяется несколько шнуров питания. Инструкции по выключению из сети смотрите в руководстве по обслуживанию.

Toto zariadenie má viacero napájacích káblov. Inštrukcie o odpojení nájdete v servisnej knižke.

Esta unidad tiene diversos cables de alimentación. Consulte el manual de servicio si desea obtener instrucciones para apagar la unidad.

Den här enheten har flera nätkablar. Servicehandboken innehåller anvisningar om hur du stänger av enheten.

P05N6607 EC F99828

Figure 3-7. Safety label–Redundant power supply

Labels only on frames equipped with PDU

The safety label shown in Figure 3-8 is located inside the ac section of the Power Distribution Unit, on the bottom of the chassis, behind the power-on LED indicator.

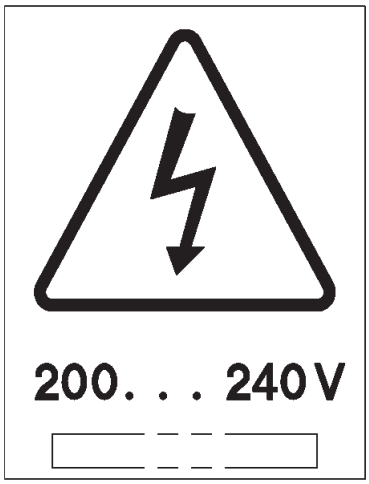

Figure 3-8. Safety label–Power distribution unit ac section

The safety label shown in Figure 3-9 is located inside the dc section of the Power Distribution Unit, on the shield over the buss bars.

Figure 3-9. Safety label–Power distribution unit dc section

The safety label shown in Figure 3-10 is located on top of the ac line filter cover.

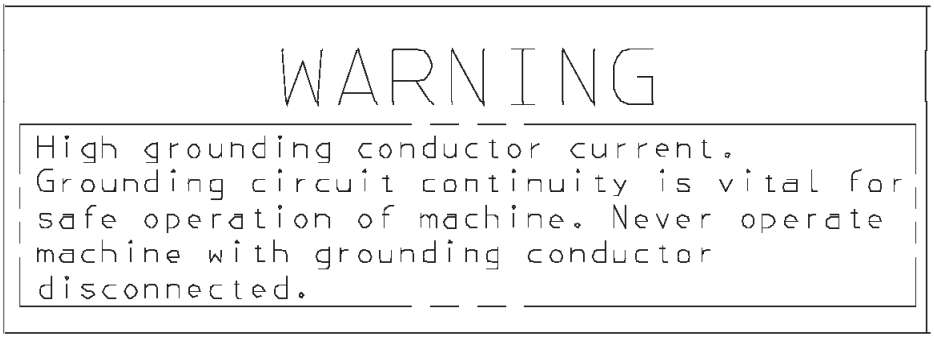

Figure 3-10. Safety label–High leakage current

The safety label shown in Figure 3-11 is located on the bottom rear of the RS/6000 SP frame.

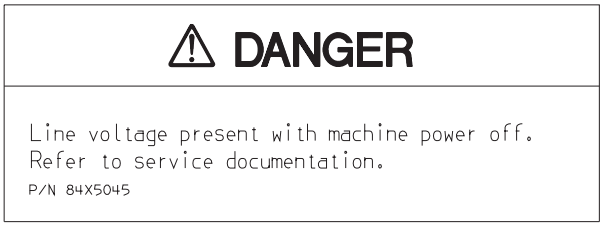

Figure 3-11. Safety label–Line voltage present

Labels only on the PDU high-voltage transformer

The information label shown in Figure 3-12 is located on the front cover of the high-voltage transformer.

Figure 3-12. Information label–Transformer front cover

The safety label shown in Figure 3-13 is located inside the service area of the high-voltage transformer.

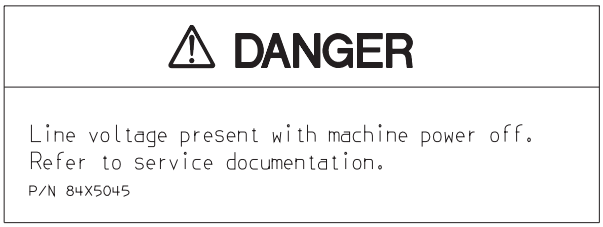

Figure 3-13. Safety label–Trained service personnel only

Grounding (earthing) path diagrams

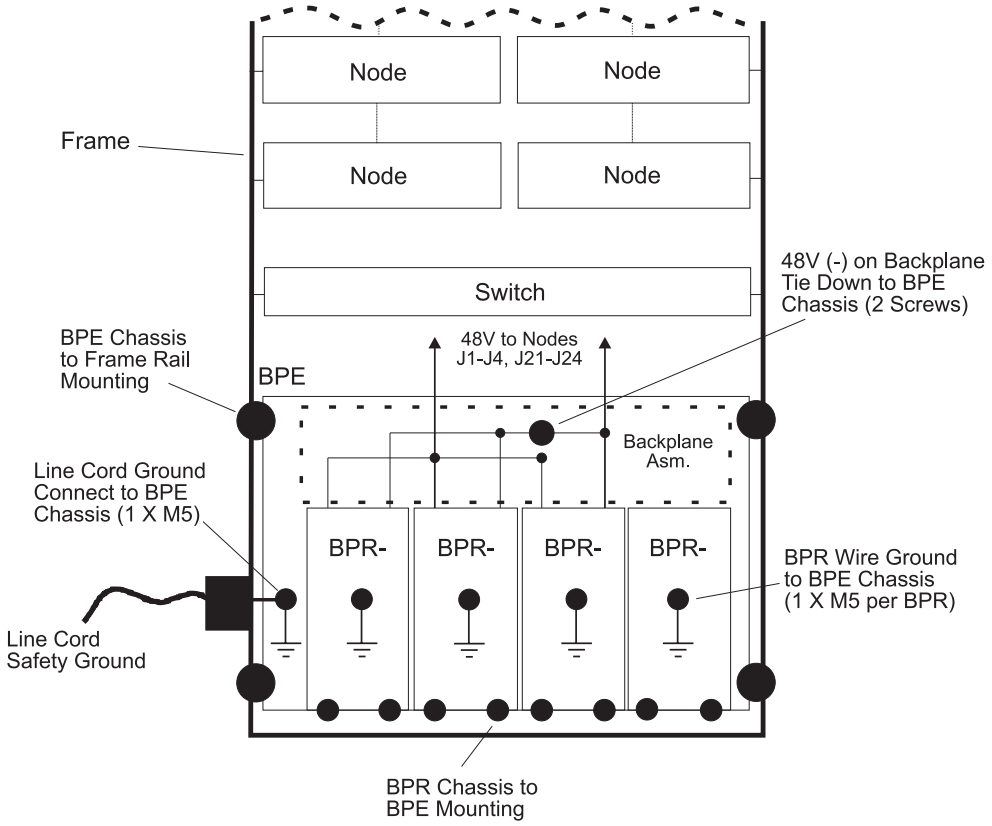

Figure 3-14. SEPBU power system grounding path

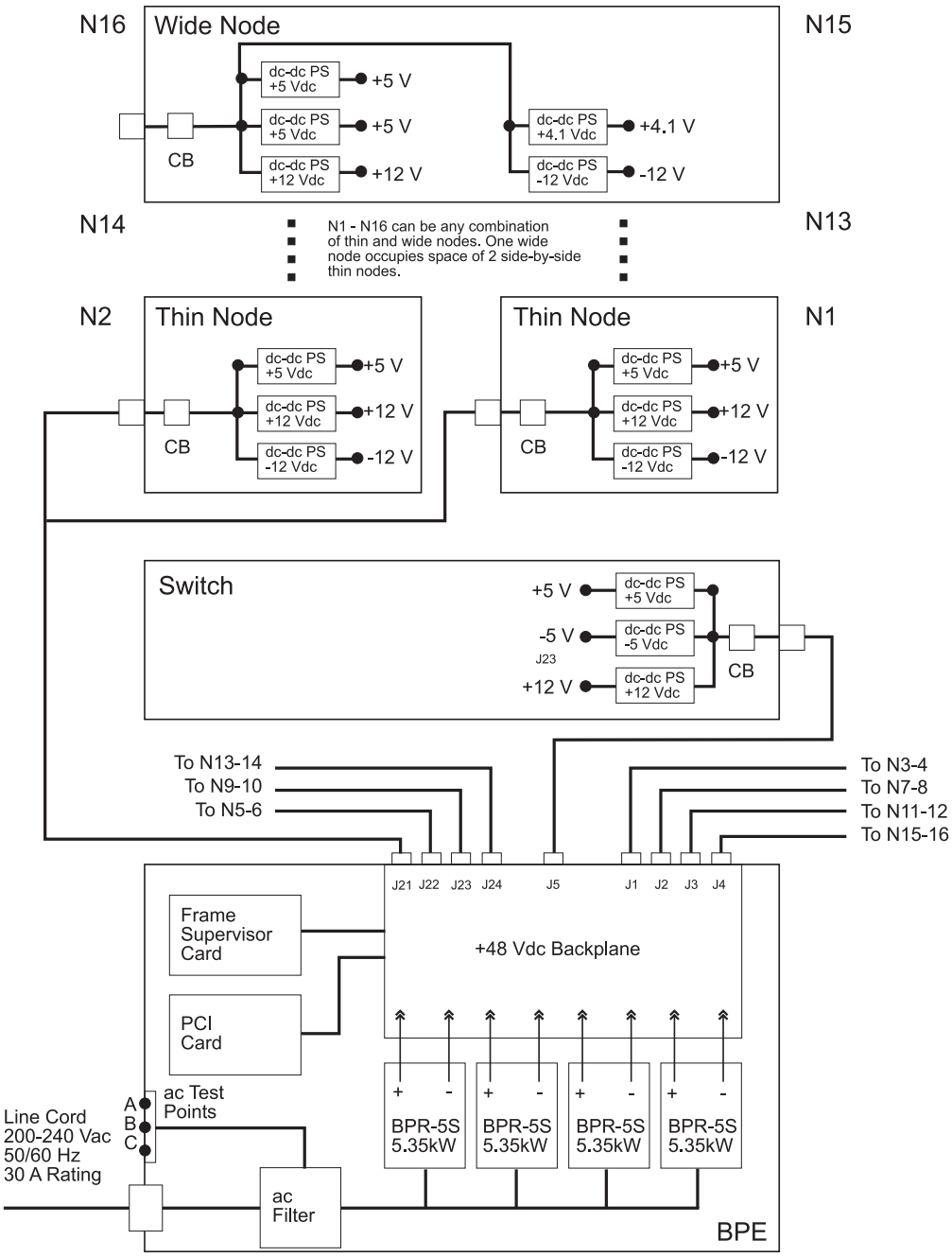

Figure 3-15. SEPBU power system single-line grounding path

Appendix A. Switch cabling tables

Figure A-1 on page A-2 illustrates plugging locations for both switch-to-node and switch-to-switch cables.

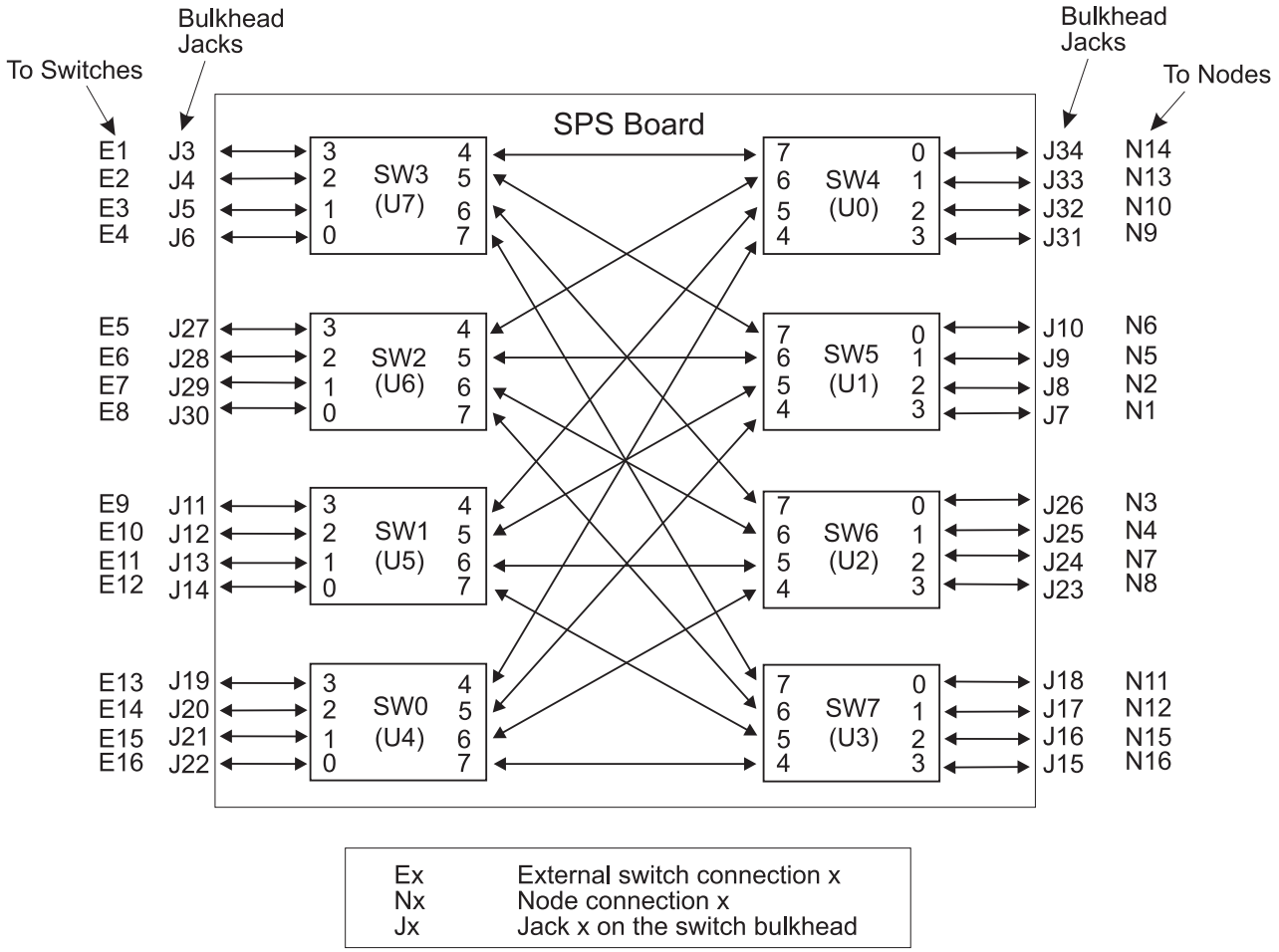

Figure A-1. Switch cable connections

Switch-to-node cable connections

Nodes within the model frames and switched expansion frames are pre-connected to the switch internal ports with labeled 2 cables in manufacturing. Use 10 switch cables to connect the remaining switch ports to nodes mounted in any non-switched expansion frames.

After you install any 10 cables, affix serial number labels and wrap the labels with mylar tape; record the serial numbers in the “Cable S/N” column of the cabling charts. The cable serial numbers are used to track individual cables in the future.

The charts in this section show only switch-to-node cable connection points. For the cable routing paths, see the “Cable routing” section in *RS/6000 SP: SP Switch Service Guide* or *RS/6000 SP: SP Switch2 Service Guide*.

Two-plane installations

Switches for the second switch plane are installed in the first expansion frames of the Model 550 frame and of any switched expansion frames. You can use the tables in this section by duplicating the connections made for the first switch plane. Make the second switch plane connections from the second plane switch adapters in each node to the second plane switches in the first expansion frames.

SP Switch (F/C 4011) and SP Switch2 (F/C 4012)

Note that the following tables do not show all possible frame/node/switch configurations; however you can use them as a guide for any configurations that are not shown.

Switch-to-node cables - within the Model 550 or switched expansion frames

Table A-1. Switch-to-node cables (within the model frame)

Length (m)	Cable s/n	Plug-from location	Plug-to location
2		E01-S00-BH-J7	E01-N01-BH-PA
2		E01-S00-BH-J8	E01-N02-BH-PA
2		E01-S00-BH-J26	E01-N03-BH-PA
2		E01-S00-BH-J25	E01-N04-BH-PA
2		E01-S00-BH-J9	E01-N05-BH-PA
2		E01-S00-BH-J10	E01-N06-BH-PA
2		E01-S00-BH-J24	E01-N07-BH-PA
2		E01-S00-BH-J23	E01-N08-BH-PA
2		E01-S00-BH-J31	E01-N09-BH-PA
2		E01-S00-BH-J32	E01-N10-BH-PA
2		E01-S00-BH-J18	E01-N11-BH-PA
2		E01-S00-BH-J17	E01-N12-BH-PA
2		E01-S00-BH-J33	E01-N13-BH-PA
2		E01-S00-BH-J34	E01-N14-BH-PA
2		E01-S00-BH-J16	E01-N15-BH-PA
2		E01-S00-BH-J15	E01-N16-BH-PA

Notes:

1. “PA” refers to the port 0 connector on the switch adapter.
2. These connections are pre-installed in manufacturing.

Switch-to-node cables - Model 550 frame to expansion frames

Table A-2. Switch-to-node cables. (expansion frames)

Length (m)	Cable s/n	Plug-from location	Plug-to location
10		E01-S00-BH-J8	E02-N01-BH-PA
10		E01-S00-BH-J25	E03-N01-BH-PA

Table A-2. Switch-to-node cables (continued). (expansion frames)

Length (m)	Cable s/n	Plug-from location	Plug-to location
10		E01-S00-BH-J26	E04-N01-BH-PA
10		E01-S00-BH-J10	E02-N05-BH-PA
10		E01-S00-BH-J23	E03-N05-BH-PA
10		E01-S00-BH-J24	E04-N05-BH-PA
10		E01-S00-BH-J32	E02-N09-BH-PA
10		E01-S00-BH-J17	E03-N09-BH-PA
10		E01-S00-BH-J18	E04-N09-BH-PA
10		E01-S00-BH-J34	E02-N13-BH-PA
10		E01-S00-BH-J15	E03-N13-BH-PA
10		E01-S00-BH-J16	E04-N13-BH-PA

Notes:

1. "Plug-to" locations are in expansion frames (**F/C 1550, 1016/19**)
2. "PA" refers to the port 0 connector on the switch adapter.
3. Any dependent node(s) attached to this switch are made in place of the corresponding node connection shown in the table.

Switch-to-node cables - Model 550, 555, 556, 557, 558, switched expansion frames to attached servers

Table A-3. SP-Attached Server switch-to-node cables

Length (m)	Cable s/n	Plug-from location	Plug-to location
10		E01-S00-BH-J7	EXP-N01-I/O Drawer (Note 1)
10		E01-S00-BH-J8	EXP-N02-I/O Drawer (Note 1)
10		E01-S00-BH-J26	EXP-N03-I/O Drawer (Note 1)
10		E01-S00-BH-J25	EXP-N04-I/O Drawer (Note 1)
10		E01-S00-BH-J9	EXP-N05-I/O Drawer (Note 1)
10		E01-S00-BH-J10	EXP-N06-I/O Drawer (Note 1)
10		E01-S00-BH-J24	EXP-N07-I/O Drawer (Note 1)
10		E01-S00-BH-J23	EXP-N08-I/O Drawer (Note 1)
10		E01-S00-BH-J31	EXP-N09-I/O Drawer (Note 1)
10		E01-S00-BH-J32	EXP-N10-I/O Drawer (Note 1)
10		E01-S00-BH-J18	EXP-N11-I/O Drawer (Note 1)
10		E01-S00-BH-J17	EXP-N12-I/O Drawer (Note 1)
10		E01-S00-BH-J33	EXP-N13-I/O Drawer (Note 1)
10		E01-S00-BH-J34	EXP-N14-I/O Drawer (Note 1)
10		E01-S00-BH-J16	EXP-N15-I/O Drawer (Note 1)
10		E01-S00-BH-J15	EXP-N16-I/O Drawer (Note 1)

Table A-3. SP-Attached Server switch-to-node cables (continued)

Length (m)	Cable s/n	Plug-from location	Plug-to location

Notes:

1. Connect the cable to port 0 on the switch adapter installed in:
   - M/T 7017 – slot 10 – primary I/O drawer
   - M/T 7026 – slot 5 – primary I/O drawer

   For two-plane configurations, connect a second cable to port 0 on the second plane switch adapter installed in:
   - M/T 7017 – slot 10 – ***secondary*** I/O drawer
   - M/T 7026 – slot 3 – primary I/O drawer
2. A Model 555 contains only one SP Switch. Plug-from locations are as shown in this table.
3. A Model 556 can optionally contain one to four SP Switch2s. Plug-from locations are indicated as S00 for the first switch, S01 for the second switch, S02 for the third, and S03 for the fourth.

SP Switch-8 (F/C 4008)

Switch-to-node cables - within the Model 500 frame

Table A-4. SP Switch-8 switch-to-node cables

Length (m)	Plug-from location	Plug-to location
2	E01-S00-BH-J7	E01-N(1)-BH-PA
2	E01-S00-BH-J8	E01-N(2)-BH-PA
2	E01-S00-BH-J26	E01-N(3)-BH-PA
2	E01-S00-BH-J25	E01-N(4)-BH-PA
2	E01-S00-BH-J9	E01-N(5)-BH-PA
2	E01-S00-BH-J10	E01-N(6)-BH-PA
2	E01-S00-BH-J24	E01-N(7)-BH-PA
2	E01-S00-BH-J23	E01-N(8)-BH-PA

Notes:

1. PA refers to the port 0 connector on the switch adapter.
2. N(n) refers to order of processor nodes starting from slot address 1.
3. Any dependent nodes attached to this SP switch are made in place of the corresponding node connection shown in the table.

Switch-to-node cables – Model 500 frame to expansion frame (F/C 1500)

Note: Switch nodes define a node number for each physical node, such that from the bottom-most node to the top-most node there will be no gap in switch node numbers. 8-port switch node numbers are assigned starting with the first node slot and increasing by one for each node until the highest numbered node slot which is populated with a node. This is opposed to the physical node numbering concept for the 16 port switch, where each node has a physical node number that corresponds to the node slot in which it resides.

Table A-5. SP Switch-8 switch-to-node cables (expansion frame)

Length (m)	Cable s/n	Plug-from location	Plug-to location
10		E01-S00-BH-J26	EXP-N(3)-BH-PA
10		E01-S00-BH-J25	EXP-N(4)-BH-PA
10		E01-S00-BH-J9	EXP-N(5)-BH-PA
10		E01-S00-BH-J10	EXP-N(6)-BH-PA
10		E01-S00-BH-J24	EXP-N(7)-BH-PA
10		E01-S00-BH-J23	EXP-N(8)-BH-PA

Notes:

1. EXP refers to expansion frame (**F/C 1500, 1027/1028/1029**)
2. N(#) refers to logical order of processor nodes starting from the logical frame 1, nodes 1 and 2.
3. PA refers to the port 0 connector on the switch adapter.
4. For systems with three or less nodes in the base frame, use the longest internal switch cable(s) to connect to the node(s) in the first expansion frame.
5. Any dependent node(s) attached to this SP switch are made in place of the corresponding node connection shown in the table.

Figure A-2 illustrates example node numbering for an SP Switch-8 in a 1.25 frame.

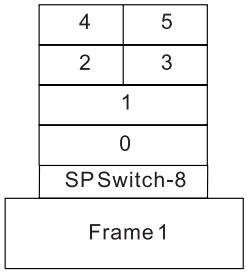

Figure A-2. Example switch node numbering for an SPS-8 (1.25 frame)

Switch-to-switch cable connections

1. Use the appropriate tables in this section based on the quantity of ***logical*** frames (containing a switch for the first switch plane) in the SP system. Some configurations have a greater quantity of physical frames due to the addition of non-switched expansion frames. Processor nodes in expansion frames are connected to the switch assembly in the Model 550 frame and any switched expansion frames; these frame sets are considered as one logical frame.

Two-plane installations

Switches for the second switch plane are installed in the first expansion frames of the Model 550 frame and of any switched expansion frames. You can use the tables in this section by duplicating the connections made for the first switch plane. Make the second switch plane connections between the second plane switches which are mounted in the first expansion frames.

2. Use the following table to record the frame ID numbers of the model frame and any expansion frames (F/C 1550, 1010, 1015).

Table A-6. Frame ID designations

Logical frame no.	**L01**	**L02**	**L03**	**L04**	**L05**	**L06**	**L07**	**L08**
Model or switched expansion frame ID								
Expansion frame IDs								

3. There are four different lengths of switch cables available for switch-to-switch connections.

Length (m)	**Cable p/n**
5	46H9698
10	46H9699
15	46H9700
20	46H9701

   The lengths shown in the cabling charts are based on typical assumptions; however, a system might use different cable lengths due to the floor plan layout. Different cable lengths do not adversly affect switch function.

4. After you install the cables, affix serial number labels and wrap the labels with mylar tape. Record the serial numbers in the “Cable S/N” column of the cabling charts. These cable serial numbers are used to track individual cables in the future.

   You might want to make a copy of the appropriate cabling charts and update the copy, in order to ease any future changes.

5. Routing switch cables:
   - For SP frames with processor nodes - All switch cables connected to switch bulkhead J3 through J17 should be routed through the exit (E1) closest to that side of the frame. Cables connected to switch bulkhead J19 through J33 should be routed through the other exit (E2). Refer to the “Locations” and “Service Procedures” chapters of *RS/6000 SP: SP Switch Service Guide* and *RS/6000 SP: SP Switch2 Service Guide* for more information.
   - For switch frames (F/C 2031, 2032) - Cables should be bundled in groups of four and routed in the raceways. By following this convention, future upgrades of the switch frame should be easier to perform. Cables should exit the frame through the hole in the bottom of the frame extension, then be routed to the appropriate frame. Most of excess cable length should be left near the other frames rather than near the switch frame.

Using the switch-to-switch cable connection tables

The tables in this section show the connections to the external switch ports which interconnect each switch in systems not containing a switch frame (F/C 2031, 2032). Use the appropriate table, according to the quantity of switches in the first switch plane:

- “Two-switch system” on page A-8
- “Three-switch system” on page A-8

- “Four-switch system” on page A-9
- “Five-switch system” on page A-10
- “Switch frame (F/C 2031, 2032) cable connections” on page A-12.

Two-switch system

Table A-7. Two-switch system

Length (m)	Cable s/n	External switch port	
		Frame 1	Frame 2
5		L01-S00-BH-J3	L02-S00-BH-J3
5		L01-S00-BH-J4	L02-S00-BH-J4
5		L01-S00-BH-J5	L02-S00-BH-J5
5		L01-S00-BH-J6	L02-S00-BH-J6
5		L01-S00-BH-J27	L02-S00-BH-J27
5		L01-S00-BH-J28	L02-S00-BH-J28
5		L01-S00-BH-J29	L02-S00-BH-J29
5		L01-S00-BH-J30	L02-S00-BH-J30
5		L01-S00-BH-J11	L02-S00-BH-J11
5		L01-S00-BH-J12	L02-S00-BH-J12
5		L01-S00-BH-J13	L02-S00-BH-J13
5		L01-S00-BH-J14	L02-S00-BH-J14
5		L01-S00-BH-J19	L02-S00-BH-J19
5		L01-S00-BH-J20	L02-S00-BH-J20
5		L01-S00-BH-J21	L02-S00-BH-J21
5		L01-S00-BH-J22	L02-S00-BH-J22

Three-switch system

Table A-8. Three-switch system - frame 1 to 2

Length (m)	Cable s/n	External switch port	
		Frame 1	Frame 2
5		L01-S00-BH-J3	L02-S00-BH-J3
5		L01-S00-BH-J5	L02-S00-BH-J5
5		L01-S00-BH-J27	L02-S00-BH-J27
5		L01-S00-BH-J29	L02-S00-BH-J29
5		L01-S00-BH-J11	L02-S00-BH-J11
5		L01-S00-BH-J13	L02-S00-BH-J13
5		L01-S00-BH-J19	L02-S00-BH-J19
5		L01-S00-BH-J21	L02-S00-BH-J21

Table A-9. Three-switch system - frame 2 to 3

Length (m)	Cable s/n	External switch port	
		Frame 2	Frame 3
5		L02-S00-BH-J4	L03-S00-BH-J4
5		L02-S00-BH-J6	L03-S00-BH-J6

Table A-9. Three-switch system - frame 2 to 3 (continued)

Length (m)	Cable s/n	External switch port	
		Frame 2	Frame 3
5		L02-S00-BH-J28	L03-S00-BH-J28
5		L02-S00-BH-J30	L03-S00-BH-J30
5		L02-S00-BH-J12	L03-S00-BH-J12
5		L02-S00-BH-J14	L03-S00-BH-J14
5		L02-S00-BH-J20	L03-S00-BH-J20
5		L02-S00-BH-J22	L03-S00-BH-J22

Table A-10. Three-switch system - frame 1 to 3

Length (m)	Cable s/n	External switch port	
		Frame 1	Frame 3
10		L01-S00-BH-J4	L03-S00-BH-J3
10		L01-S00-BH-J6	L03-S00-BH-J5
10		L01-S00-BH-J28	L03-S00-BH-J27
10		L01-S00-BH-J30	L03-S00-BH-J29
10		L01-S00-BH-J12	L03-S00-BH-J11
10		L01-S00-BH-J14	L03-S00-BH-J13
10		L01-S00-BH-J20	L03-S00-BH-J19
10		L01-S00-BH-J22	L03-S00-BH-J21

Four-switch system

Table A-11. Four-switch system - frame 1 to 2

Length (m)	Cable s/n	External switch port	
		Frame 1	Frame 2
5		L01-S00-BH-J3	L02-S00-BH-J3
5		L01-S00-BH-J6	L02-S00-BH-J6
5		L01-S00-BH-J29	L02-S00-BH-J29
5		L01-S00-BH-J12	L02-S00-BH-J12
5		L01-S00-BH-J19	L02-S00-BH-J19
5		L01-S00-BH-J22	L02-S00-BH-J22

Table A-12. Four-switch system - frame 2 to 3

Length (m)	Cable s/n	External switch port	
		Frame 2	Frame 3
5		L02-S00-BH-J4	L03-S00-BH-J4
5		L02-S00-BH-J27	L03-S00-BH-J27
5		L02-S00-BH-J30	L03-S00-BH-J30
5		L02-S00-BH-J13	L03-S00-BH-J13
5		L02-S00-BH-J20	L03-S00-BH-J20

Table A-13. Four-switch system - frame 3 to 4

Length (m)	Cable s/n	External switch port	
		Frame 3	Frame 4
5		L03-S00-BH-J5	L04-S00-BH-J5
5		L03-S00-BH-J28	L04-S00-BH-J28
5		L03-S00-BH-J11	L04-S00-BH-J11
5		L03-S00-BH-J14	L04-S00-BH-J14
5		L03-S00-BH-J21	L04-S00-BH-J21
5		L03-S00-BH-J22	L04-S00-BH-J22

Table A-14. Four-switch system - frame 1 to 3

Length (m)	Cable s/n	External switch port	
		Frame 1	Frame 3
10		L01-S00-BH-J4	L03-S00-BH-J3
10		L01-S00-BH-J27	L03-S00-BH-J6
10		L01-S00-BH-J30	L03-S00-BH-J29
10		L01-S00-BH-J13	L03-S00-BH-J12
10		L01-S00-BH-J20	L03-S00-BH-J19

Table A-15. Four-switch system - frame 2 to 4

Length (m)	Cable s/n	External switch port	
		Frame 2	Frame 4
10		L02-S00-BH-J5	L04-S00-BH-J4
10		L02-S00-BH-J28	L04-S00-BH-J27
10		L02-S00-BH-J11	L04-S00-BH-J30
10		L02-S00-BH-J14	L04-S00-BH-J13
10		L02-S00-BH-J21	L04-S00-BH-J20

Table A-16. Four-switch system - frame 1 to 4

Length (m)	Cable s/n	External switch port	
		Frame 1	Frame 4
10		L01-S00-BH-J5	L04-S00-BH-J3
10		L01-S00-BH-J28	L04-S00-BH-J6
10		L01-S00-BH-J11	L04-S00-BH-J29
10		L01-S00-BH-J14	L04-S00-BH-J12
10		L01-S00-BH-J21	L04-S00-BH-J19

Five-switch system

Table A-17. Five-switch system - frame 1 to 2

Length (m)	Cable s/n	External switch port	
		Frame 1	Frame 2
5		L01-S00-BH-J3	L02-S00-BH-J3

Table A-17. Five-switch system - frame 1 to 2 (continued)

Length (m)	Cable s/n	External switch port	
		Frame 1	Frame 2
5		L01-S00-BH-J27	L02-S00-BH-J27
5		L01-S00-BH-J11	L02-S00-BH-J11
5		L01-S00-BH-J19	L02-S00-BH-J19

Table A-18. Five-switch system - frame 1 to 3

Length (m)	Cable s/n	External switch port	
		Frame 1	Frame 3
10		L01-S00-BH-J4	L03-S00-BH-J3
10		L01-S00-BH-J28	L03-S00-BH-J27
10		L01-S00-BH-J12	L03-S00-BH-J11
10		L01-S00-BH-J20	L03-S00-BH-J19

Table A-19. Five-switch system - frame 1 to 4

Length (m)	Cable s/n	External switch port	
		Frame 1	Frame 4
10		L01-S00-BH-J5	L04-S00-BH-J3
10		L01-S00-BH-J29	L04-S00-BH-J27
10		L01-S00-BH-J13	L04-S00-BH-J11
10		L01-S00-BH-J21	L04-S00-BH-J19

Table A-20. Five-switch system - frame 1 to 5

Length (m)	Cable s/n	External switch port	
		Frame 1	Frame 5
10		L01-S00-BH-J6	L05-S00-BH-J3
10		L01-S00-BH-J30	L05-S00-BH-J27
10		L01-S00-BH-J14	L05-S00-BH-J11
10		L01-S00-BH-J22	L05-S00-BH-J19

Table A-21. Five-switch system - frame 2 to 3

Length (m)	Cable s/n	External switch port	
		Frame 2	Frame 3
5		L02-S00-BH-J4	L03-S00-BH-J4
5		L02-S00-BH-J28	L03-S00-BH-J28
5		L02-S00-BH-J12	L03-S00-BH-J12
5		L02-S00-BH-J20	L03-S00-BH-J20

Table A-22. Five-switch system - frame 2 to 4

Length (m)	Cable s/n	External switch port	
		Frame 2	Frame 4
10		L02-S00-BH-J5	L04-S00-BH-J4

Table A-22. Five-switch system - frame 2 to 4 (continued)

Length (m)	Cable s/n	External switch port	
		Frame 2	Frame 4
10		L02-S00-BH-J29	L04-S00-BH-J28
10		L02-S00-BH-J13	L04-S00-BH-J12
10		L02-S00-BH-J21	L04-S00-BH-J20

Table A-23. Five-switch system - frame 2 to 5

Length (m)	Cable s/n	External switch port	
		Frame 2	Frame 5
10		L02-S00-BH-J6	L05-S00-BH-J4
10		L02-S00-BH-J30	L05-S00-BH-J28
10		L02-S00-BH-J14	L05-S00-BH-J12
10		L02-S00-BH-J22	L05-S00-BH-J20

Table A-24. Five-switch system - frame 3 to 4

Length (m)	Cable s/n	External switch port	
		Frame 3	Frame 4
5		L03-S00-BH-J5	L04-S00-BH-J5
5		L03-S00-BH-J29	L04-S00-BH-J29
5		L03-S00-BH-J13	L04-S00-BH-J13
5		L03-S00-BH-J21	L04-S00-BH-J21

Table A-25. Five-switch system - frame 3 to 5

Length (m)	Cable s/n	External switch port	
		Frame 3	Frame 5
10		L03-S00-BH-J6	L05-S00-BH-J5
10		L03-S00-BH-J30	L05-S00-BH-J29
10		L03-S00-BH-J14	L05-S00-BH-J13
10		L03-S00-BH-J22	L05-S00-BH-J21

Table A-26. Five-switch system - frame 4 to 5

Length (m)	Cable s/n	External switch port	
		Frame 4	Frame 5
10		L04-S00-BH-J6	L05-S00-BH-J6
10		L04-S00-BH-J30	L05-S00-BH-J30
10		L04-S00-BH-J14	L05-S00-BH-J14
10		L04-S00-BH-J22	L05-S00-BH-J22

Switch frame (F/C 2031, 2032) cable connections

The tables in this section show the connections from the external switch ports in a switch frame with the switches in up to eight logical frames. Entries followed by an

asterisk (*) indicate that the cable connection is replaced by a wrap plug if the corresponding frame (logical frame L06, L07, or L08) is not present.

Two-plane installations

Switches for the second switch plane are installed in the first expansion frames of the Model 550 frame and any switched expansion frames. You can use the tables in this section by duplicating the connections made for the first switch plane. Make the second plane connections from the second plane switches which are mounted in the first expansion frames to the second plane switches in the switch frame.

Table A-27. Switch frame cable connections

Length (m)	Cable s/n	External switch port	
		Switch frame	**Logical frame**
		S01-S14-BH-J3	L01-S00-BH-J6
		S01-S10-BH-J3	L01-S00-BH-J5
		S01-S06-BH-J3	L01-S00-BH-J4
		S01-S02-BH-J3	L01-S00-BH-J3
		S01-S14-BH-J4	L02-S00-BH-J6
		S01-S10-BH-J4	L02-S00-BH-J5
		S01-S06-BH-J4	L02-S00-BH-J4
		S01-S02-BH-J4	L02-S00-BH-J3
		S01-S14-BH-J5	L03-S00-BH-J6
		S01-S10-BH-J5	L03-S00-BH-J5
		S01-S06-BH-J5	L03-S00-BH-J4
		S01-S02-BH-J5	L03-S00-BH-J3
		S01-S14-BH-J6	L04-S00-BH-J6
		S01-S10-BH-J6	L04-S00-BH-J5
		S01-S06-BH-J6	L04-S00-BH-J4
		S01-S02-BH-J6	L04-S00-BH-J3
		S01-S14-BH-J34	L05-S00-BH-J6
		S01-S10-BH-J34	L05-S00-BH-J5
		S01-S06-BH-J34	L05-S00-BH-J4
		S01-S02-BH-J34	L05-S00-BH-J3
		S01-S14-BH-J33*	L06-S00-BH-J6
		S01-S10-BH-J33*	L06-S00-BH-J5
		S01-S06-BH-J33*	L06-S00-BH-J4
		S01-S02-BH-J33*	L06-S00-BH-J3
		S01-S14-BH-J32 *	L07-S00-BH-J6
		S01-S10-BH-J32 *	L07-S00-BH-J5
		S01-S06-BH-J32 *	L07-S00-BH-J4
		S01-S02-BH-J32 *	L07-S00-BH-J3
		S01-S14-BH-J31*	L08-S00-BH-J6

Table A-27. Switch frame cable connections (continued)

Length (m)	Cable s/n	External switch port	
		Switch frame	**Logical frame**
		S01-S10-BH-J31*	L08-S00-BH-J5
		S01-S06-BH-J31*	L08-S00-BH-J4
		S01-S02-BH-J31*	L08-S00-BH-J3

Note: Entries followed by an asterisk (*) indicate that the cable connection is replaced by a wrap plug if the corresponding frame (logical frame L06, L07, or L08) is not present.

Table A-28. Switch frame cable connections - raceway W2

Length (m)	Cable s/n	External switch port	
		Switch frame	**Logical frame**
		S01-S14-BH-J27	L01-S00-BH-J30
		S01-S10-BH-J27	L01-S00-BH-J29
		S01-S06-BH-J27	L01-S00-BH-J28
		S01-S02-BH-J27	L01-S00-BH-J27
		S01-S14-BH-J28	L02-S00-BH-J30
		S01-S10-BH-J28	L02-S00-BH-J29
		S01-S06-BH-J28	L02-S00-BH-J28
		S01-S02-BH-J28	L02-S00-BH-J27
		S01-S14-BH-J29	L03-S00-BH-J30
		S01-S10-BH-J29	L03-S00-BH-J29
		S01-S06-BH-J29	L03-S00-BH-J28
		S01-S02-BH-J29	L03-S00-BH-J27
		S01-S14-BH-J30	L04-S00-BH-J30
		S01-S10-BH-J30	L04-S00-BH-J29
		S01-S06-BH-J30	L04-S00-BH-J28
		S01-S02-BH-J30	L04-S00-BH-J27
		S01-S14-BH-J10	L05-S00-BH-J30
		S01-S10-BH-J10	L05-S00-BH-J29
		S01-S06-BH-J10	L05-S00-BH-J28
		S01-S02-BH-J10	L05-S00-BH-J27
		S01-S14-BH-J9 *	L06-S00-BH-J30
		S01-S10-BH-J9 *	L06-S00-BH-J29
		S01-S06-BH-J9 *	L06-S00-BH-J28
		S01-S02-BH-J9 *	L06-S00-BH-J27
		S01-S14-BH-J8 *	L07-S00-BH-J30
		S01-S10-BH-J8 *	L07-S00-BH-J29
		S01-S06-BH-J8 *	L07-S00-BH-J28
		S01-S02-BH-J8 *	L07-S00-BH-J27
		S01-S14-BH-J7 *	L08-S00-BH-J30
		S01-S10-BH-J7 *	L08-S00-BH-J29

Table A-28. Switch frame cable connections - raceway W2 (continued)

Length (m)	Cable s/n	External switch port	
		Switch frame	**Logical frame**
		S01-S06-BH-J7 *	L08-S00-BH-J28
		S01-S02-BH-J7 *	L08-S00-BH-J27
Note: Entries followed by an asterisk (*) indicate that the cable connection is replaced by a wrap plug if the corresponding frame (logical frame L06, L07, or L08) is not present.			

Table A-29. Switch frame cable connections - raceway W3

Length (m)	Cable s/n	External switch port	
		Switch frame	**Logical frame**
		S01-S14-BH-J11	L01-S00-BH-J14
		S01-S10-BH-J11	L01-S00-BH-J13
		S01-S06-BH-J11	L01-S00-BH-J12
		S01-S02-BH-J11	L01-S00-BH-J11
		S01-S14-BH-J12	L02-S00-BH-J14
		S01-S10-BH-J12	L02-S00-BH-J13
		S01-S06-BH-J12	L02-S00-BH-J12
		S01-S02-BH-J12	L02-S00-BH-J11
		S01-S14-BH-J13	L03-S00-BH-J14
		S01-S10-BH-J13	L03-S00-BH-J13
		S01-S06-BH-J13	L03-S00-BH-J12
		S01-S02-BH-J13	L03-S00-BH-J11
		S01-S14-BH-J14	L04-S00-BH-J14
		S01-S10-BH-J14	L04-S00-BH-J13
		S01-S06-BH-J14	L04-S00-BH-J12
		S01-S02-BH-J14	L04-S00-BH-J11
		S01-S14-BH-J26	L05-S00-BH-J14
		S01-S10-BH-J26	L05-S00-BH-J13
		S01-S06-BH-J26	L05-S00-BH-J12
		S01-S02-BH-J26	L05-S00-BH-J11
		S01-S14-BH-J25 *	L06-S00-BH-J14
		S01-S10-BH-J25 *	L06-S00-BH-J13
		S01-S06-BH-J25 *	L06-S00-BH-J12
		S01-S02-BH-J25 *	L06-S00-BH-J11
		S01-S14-BH-J24 *	L07-S00-BH-J14
		S01-S10-BH-J24 *	L07-S00-BH-J13
		S01-S06-BH-J24 *	L07-S00-BH-J12
		S01-S02-BH-J24 *	L07-S00-BH-J11
		S01-S14-BH-J23 *	L08-S00-BH-J14
		S01-S10-BH-J23 *	L08-S00-BH-J13
		S01-S06-BH-J23 *	L08-S00-BH-J12

Table A-29. Switch frame cable connections - raceway W3 (continued)

Length (m)	Cable s/n	External switch port	
		Switch frame	**Logical frame**
		S01-S02-BH-J23 *	L08-S00-BH-J11
Note: Entries followed by an asterisk (*) indicate that the cable connection is replaced by a wrap plug if the corresponding frame (logical frame L06, L07, or L08) is not present.			

Table A-30. Switch frame cable connections - raceway W4

Length (m)	Cable s/n	External switch port	
		Switch frame	**Logical frame**
		S01-S14-BH-J19	L01-S00-BH-J22
		S01-S10-BH-J19	L01-S00-BH-J21
		S01-S06-BH-J19	L01-S00-BH-J20
		S01-S02-BH-J19	L01-S00-BH-J19
		S01-S14-BH-J20	L02-S00-BH-J22
		S01-S10-BH-J20	L02-S00-BH-J21
		S01-S06-BH-J20	L02-S00-BH-J20
		S01-S02-BH-J20	L02-S00-BH-J19
		S01-S14-BH-J21	L03-S00-BH-J22
		S01-S10-BH-J21	L03-S00-BH-J21
		S01-S06-BH-J21	L03-S00-BH-J20
		S01-S02-BH-J21	L03-S00-BH-J19
		S01-S14-BH-J22	L04-S00-BH-J22
		S01-S10-BH-J22	L04-S00-BH-J21
		S01-S06-BH-J22	L04-S00-BH-J20
		S01-S02-BH-J22	L04-S00-BH-J19
		S01-S14-BH-J18	L05-S00-BH-J22
		S01-S10-BH-J18	L05-S00-BH-J21
		S01-S06-BH-J18	L05-S00-BH-J20
		S01-S02-BH-J18	L05-S00-BH-J19
		S01-S14-BH-J17 *	L06-S00-BH-J22
		S01-S10-BH-J17 *	L06-S00-BH-J21
		S01-S06-BH-J17 *	L06-S00-BH-J20
		S01-S02-BH-J17 *	L06-S00-BH-J19
		S01-S14-BH-J16 *	L07-S00-BH-J22
		S01-S10-BH-J16 *	L07-S00-BH-J21
		S01-S06-BH-J16 *	L07-S00-BH-J20
		S01-S02-BH-J16 *	L07-S00-BH-J19
		S01-S14-BH-J15 *	L08-S00-BH-J22
		S01-S10-BH-J15 *	L08-S00-BH-J21
		S01-S06-BH-J15 *	L08-S00-BH-J20
		S01-S02-BH-J15 *	L08-S00-BH-J19

Table A-30. Switch frame cable connections - raceway W4 (continued)

Length (m)	Cable s/n	External switch port	
		Switch frame	Logical frame
Note: Entries followed by an asterisk (*) indicate that the cable connection is replaced by a wrap plug if the corresponding frame (logical frame L06, L07, or L08) is not present.			

Upgrading switch cabling

Use the tables in this section after adding additional ***logical*** (switched) frames to an existing SP system. Ensure that you use the correct procedure based on the quantity of logical frames in the original system versus the new quantity. Many systems have a greater quantity of physical frames due to the presence of non-switched expansion frames.

Two-plane installations

Switches for the second switch plane are installed in the first expansion frames of the Model 550 frame and of any switched expansion frames. You can use the tables in this section by duplicating the connections made for the first switch plane. Make the second plane connections from the second plane switches which are mounted in the first expansion frames.

This section contains cabling instructions for:

- “Upgrading from one frame to two frames”
- “Upgrading from one frame to three frames”
- “Upgrading from one frame to four frames”
- “Upgrading from one frame to five frames” on page A-18
- “Upgrading from two frames to three frames” on page A-18
- “Upgrading from two frames to four frames” on page A-18
- “Upgrading from two frames to five frames” on page A-20
- “Upgrading from three frames to four frames” on page A-21
- “Upgrading from three frames to five frames” on page A-22
- “Upgrading from four frames to five frames” on page A-24
- “Upgrading to a switch frame (F/C 2031, 2032)” on page A-25
- “Adding frames to a system with a switch frame” on page A-25

Upgrading from one frame to two frames

1. Remove wrap plugs from odd-numbered jacks (J3-J35) on all switch assemblies.
2. Install switch cables as listed in “Two-switch system” on page A-8.

Upgrading from one frame to three frames

1. Remove wrap plugs from odd-numbered jacks (J3-J35) on all switch assemblies.
2. Install switch cables as listed in “Three-switch system” on page A-8.

Upgrading from one frame to four frames

1. Remove wrap plugs from odd-numbered jacks (J3-J35) on all switch assemblies.
2. Install switch cables as listed in “Four-switch system” on page A-9.

Upgrading from one frame to five frames

1. Remove wrap plugs from odd-numbered jacks (J3-J35) on all switch assemblies.
2. Install switch cables as listed in “Five-switch system” on page A-10.

Upgrading from two frames to three frames

1. Change switch cable connections as indicated in the following table. The removed cables are to be labeled and plugged into the new locations.

Table A-31. Switch-to-switch cable changes for two-to-three frame upgrades

Length (m)	Cable s/n	Removed location		New location	
		From	To	From	To
5		L01-S00-BH-J4	L02-S00-BH-J4	L02-S00-BH-J4	L03-S00-BH-J4
5		L01-S00-BH-J6	L02-S00-BH-J6	L02-S00-BH-J6	L03-S00-BH-J6
5		L01-S00-BH-J28	L02-S00-BH-J28	L02-S00-BH-J28	L03-S00-BH-J28
5		L01-S00-BH-J30	L02-S00-BH-J30	L02-S00-BH-J30	L03-S00-BH-J30
5		L01-S00-BH-J12	L02-S00-BH-J12	L02-S00-BH-J12	L03-S00-BH-J12
5		L01-S00-BH-J14	L02-S00-BH-J14	L02-S00-BH-J14	L03-S00-BH-J14
5		L01-S00-BH-J20	L02-S00-BH-J20	L02-S00-BH-J20	L03-S00-BH-J20
5		L01-S00-BH-J22	L02-S00-BH-J22	L02-S00-BH-J22	L03-S00-BH-J22

2. Install new switch-to-switch cables as indicated in the following table.

Table A-32. Switch-to-switch additions for two-to-three frame upgrades

Length (m)	Cable s/n	From	To
10		L01-S00-BH-J4	L03-S00-BH-J3
10		L01-S00-BH-J6	L03-S00-BH-J5
10		L01-S00-BH-J28	L03-S00-BH-J27
10		L01-S00-BH-J30	L03-S00-BH-J29
10		L01-S00-BH-J12	L03-S00-BH-J11
10		L01-S00-BH-J14	L03-S00-BH-J13
10		L01-S00-BH-J20	L03-S00-BH-J19
10		L01-S00-BH-J22	L03-S00-BH-J21

Upgrading from two frames to four frames

1. Change switch cable connections as indicated in the following table. The removed cables are to be labeled and plugged into the new locations.

Table A-33. Switch-to-switch cable changes for two-to-four frame upgrades

Length (m)	Cable s/n	Removed location		New location	
		From	To	From	To
5		L01-S00-BH-J5	L02-S00-BH-J5	L03-S00-BH-J5	L04-S00-BH-J5
5		L01-S00-BH-J28	L02-S00-BH-J28	L03-S00-BH-J28	L04-S00-BH-J28
5		L01-S00-BH-J11	L02-S00-BH-J11	L03-S00-BH-J11	L04-S00-BH-J11
5		L01-S00-BH-J14	L02-S00-BH-J14	L03-S00-BH-J14	L04-S00-BH-J14
5		L01-S00-BH-J21	L02-S00-BH-J21	L03-S00-BH-J21	L04-S00-BH-J21
5		L01-S00-BH-J4	L02-S00-BH-J4	L02-S00-BH-J4	L03-S00-BH-J4
5		L01-S00-BH-J27	L02-S00-BH-J27	L02-S00-BH-J27	L03-S00-BH-J27
5		L01-S00-BH-J30	L02-S00-BH-J30	L02-S00-BH-J30	L03-S00-BH-J30
5		L01-S00-BH-J13	L02-S00-BH-J13	L02-S00-BH-J13	L03-S00-BH-J13
5		L01-S00-BH-J20	L02-S00-BH-J20	L02-S00-BH-J20	L03-S00-BH-J20

2. Install new external switch cables as indicated in the following table.

Table A-34. Switch-to-switch cable additions for two-to-four frame upgrades

Length (m)	Cable s/n	From	To
5		L03-S00-BH-J22	L04-S00-BH-J22
10		L01-S00-BH-J4	L03-S00-BH-J3
10		L01-S00-BH-J27	L03-S00-BH-J6
10		L01-S00-BH-J30	L03-S00-BH-J29
10		L01-S00-BH-J13	L03-S00-BH-J12
10		L01-S00-BH-J20	L03-S00-BH-J19
10		L01-S00-BH-J5	L04-S00-BH-J3
10		L01-S00-BH-J28	L04-S00-BH-J6
10		L01-S00-BH-J11	L04-S00-BH-J29
10		L01-S00-BH-J14	L04-S00-BH-J12
10		L01-S00-BH-J21	L04-S00-BH-J19
10		L02-S00-BH-J5	L04-S00-BH-J4
10		L02-S00-BH-J28	L04-S00-BH-J27
10		L02-S00-BH-J11	L04-S00-BH-J30
10		L02-S00-BH-J14	L04-S00-BH-J13
10		L02-S00-BH-J21	L04-S00-BH-J20

Upgrading from two frames to five frames

1. Remove switch cable connections as indicated in the following table. These cables will not be reused in this system.

Table A-35. Switch-to-switch cable removals for two-to-five frame upgrades

Length (m)	Cable s/n	From	To
5		L01-S00-BH-J6	L02-S00-BH-J6
5		L01-S00-BH-J30	L02-S00-BH-J30
5		L01-S00-BH-J14	L02-S00-BH-J14
5		L01-S00-BH-J22	L02-S00-BH-J22

2. Change switch cable connections as indicated in the following table. The removed cables are to be labeled and plugged into the new locations.

Table A-36. Switch-to-switch cable changes for two-to-five frame upgrades

Length (m)	Cable s/n	Removed location		New location	
		From	To	From	To
5		L01-S00-BH-J5	L02-S00-BH-J5	L03-S00-BH-J5	L04-S00-BH-J5
5		L01-S00-BH-J29	L02-S00-BH-J29	L03-S00-BH-J29	L04-S00-BH-J29
5		L01-S00-BH-J13	L02-S00-BH-J13	L03-S00-BH-J13	L04-S00-BH-J13
5		L01-S00-BH-J21	L02-S00-BH-J21	L03-S00-BH-J21	L04-S00-BH-J21
5		L01-S00-BH-J4	L02-S00-BH-J4	L02-S00-BH-J4	L03-S00-BH-J4
5		L01-S00-BH-J28	L02-S00-BH-J28	L02-S00-BH-J28	L03-S00-BH-J28
5		L01-S00-BH-J12	L02-S00-BH-J12	L02-S00-BH-J12	L03-S00-BH-J12
5		L01-S00-BH-J20	L02-S00-BH-J20	L02-S00-BH-J20	L03-S00-BH-J20

3. Install new external switch cables as indicated in the following table.

Table A-37. Switch-to-switch cable additions for two-to-five frame upgrades

Length (m)	Cable s/n	From	To
10		L01-S00-BH-J4	L03-S00-BH-J3
10		L01-S00-BH-J28	L03-S00-BH-J27
10		L01-S00-BH-J12	L03-S00-BH-J11
10		L01-S00-BH-J20	L03-S00-BH-J19
10		L01-S00-BH-J5	L04-S00-BH-J3
10		L01-S00-BH-J29	L04-S00-BH-J27
10		L01-S00-BH-J13	L04-S00-BH-J11
10		L01-S00-BH-J21	L04-S00-BH-J19
10		L01-S00-BH-J6	L05-S00-BH-J3
10		L01-S00-BH-J30	L05-S00-BH-J27

Table A-37. Switch-to-switch cable additions for two-to-five frame upgrades (continued)

Length (m)	Cable s/n	From	To
10		L01-S00-BH-J14	L05-S00-BH-J11
10		L01-S00-BH-J22	L05-S00-BH-J19
10		L02-S00-BH-J5	L04-S00-BH-J4
10		L02-S00-BH-J29	L04-S00-BH-J28
10		L02-S00-BH-J13	L04-S00-BH-J12
10		L02-S00-BH-J21	L04-S00-BH-J20
10		L02-S00-BH-J6	L05-S00-BH-J4
10		L02-S00-BH-J30	L05-S00-BH-J28
10		L02-S00-BH-J14	L05-S00-BH-J12
10		L02-S00-BH-J22	L05-S00-BH-J20
10		L03-S00-BH-J6	L05-S00-BH-J5
10		L03-S00-BH-J30	L05-S00-BH-J29
10		L03-S00-BH-J14	L05-S00-BH-J13
10		L03-S00-BH-J22	L05-S00-BH-J21
10		L04-S00-BH-J6	L05-S00-BH-J6
10		L04-S00-BH-J30	L05-S00-BH-J30
10		L04-S00-BH-J14	L05-S00-BH-J14
10		L04-S00-BH-J22	L05-S00-BH-J22

Upgrading from three frames to four frames

1. Change switch cable connections as indicated in the following table. The removed cables are to be labeled and plugged into the new locations.

Table A-38. Switch-to-switch cable changes for three-to-four frame upgrades

Length (m)	Cable s/n	Removed location		New location	
		From	To	From	To
5		L01-S00-BH-J5	L02-S00-BH-J5	L03-S00-BH-J5	L04-S00-BH-J5
5		L01-S00-BH-J11	L02-S00-BH-J11	L03-S00-BH-J11	L04-S00-BH-J11
5		L01-S00-BH-J21	L02-S00-BH-J21	L03-S00-BH-J21	L04-S00-BH-J21
5		L02-S00-BH-J28	L03-S00-BH-J28	L03-S00-BH-J28	L04-S00-BH-J28
5		L02-S00-BH-J14	L03-S00-BH-J14	L03-S00-BH-J14	L04-S00-BH-J14
5		L02-S00-BH-J22	L03-S00-BH-J22	L02-S00-BH-J22	L01-S00-BH-J22
10		L01-S00-BH-J6	L03-S00-BH-J5	L01-S00-BH-J5	L04-S00-BH-J3
10		L01-S00-BH-J28	L03-S00-BH-J27	L01-S00-BH-J28	L04-S00-BH-J6

Table A-38. Switch-to-switch cable changes for three-to-four frame upgrades (continued)

Length (m)	Cable s/n	Removed location		New location	
		From	To	From	To
10		L01-S00-BH-J12	L03-S00-BH-J11	L01-S00-BH-J13	L03-S00-BH-J12
10		L01-S00-BH-J14	L03-S00-BH-J13	L01-S00-BH-J14	L04-S00-BH-J12
10		L01-S00-BH-J22	L03-S00-BH-J21	L01-S00-BH-J21	L04-S00-BH-J19
5		L01-S00-BH-J27	L02-S00-BH-J27	L02-S00-BH-J27	L03-S00-BH-J27
5		L01-S00-BH-J13	L02-S00-BH-J13	L02-S00-BH-J13	L03-S00-BH-J13
5		L02-S00-BH-J12	L03-S00-BH-J12	L02-S00-BH-J12	L01-S00-BH-J12
5		L02-S00-BH-J6	L03-S00-BH-J6	L02-S00-BH-J6	L01-S00-BH-J6

2. Install new external switch cables as indicated in the following table.

Table A-39. Switch-to-switch cable additions for three-to-four frame upgrades

Length (m)	Cable s/n	From	To
5		L03-S00-BH-J22	L04-S00-BH-J22
10		L01-S00-BH-J27	L03-S00-BH-J6
10		L02-S00-BH-J11	L04-S00-BH-J30
10		L02-S00-BH-J28	L04-S00-BH-J27
10		L02-S00-BH-J5	L04-S00-BH-J4
10		L01-S00-BH-J11	L04-S00-BH-J29
10		L02-S00-BH-J14	L04-S00-BH-J13
10		L02-S00-BH-J21	L04-S00-BH-J20

Upgrading from three frames to five frames

1. Remove switch cable connections as indicated in the following table. These cables will not be reused in this system.

Table A-40. Switch-to-switch cable removals for two-to-five frame upgrades

Length (m)	Cable s/n	From	To
5		L02-S00-BH-J6	L03-S00-BH-J6
5		L02-S00-BH-J30	L03-S00-BH-J30
5		L02-S00-BH-J14	L03-S00-BH-J14
5		L02-S00-BH-J22	L03-S00-BH-J22

2. Change switch cable connections as indicated in the following table. The removed cables are to be labeled and plugged into the new locations.

Table A-41. Switch-to-switch cable changes for three-to-five frame upgrades

Length (m)	Cable s/n	Removed location		New location	
		From	To	From	To
5		L01-S00-BH-J5	L02-S00-BH-J5	L03-S00-BH-J5	L04-S00-BH-J5
5		L01-S00-BH-J29	L02-S00-BH-J29	L03-S00-BH-J29	L04-S00-BH-J29
5		L01-S00-BH-J13	L02-S00-BH-J13	L03-S00-BH-J13	L04-S00-BH-J13
5		L01-S00-BH-J21	L02-S00-BH-J21	L03-S00-BH-J21	L04-S00-BH-J21
10		L01-S00-BH-J6	L03-S00-BH-J5	L01-S00-BH-J6	L05-S00-BH-J3
10		L01-S00-BH-J30	L03-S00-BH-J29	L01-S00-BH-J30	L05-S00-BH-J27
10		L01-S00-BH-J14	L03-S00-BH-J13	L01-S00-BH-J14	L05-S00-BH-J11
10		L01-S00-BH-J22	L03-S00-BH-J21	L01-S00-BH-J22	L05-S00-BH-J19

3. Install new external switch cables as indicated in the following table.

Table A-42. Switch-to-switch cable additions for three-to-five frame upgrades

Length (m)	Cable s/n	From	To
10		L01-S00-BH-J5	L04-S00-BH-J3
10		L01-S00-BH-J29	L04-S00-BH-J27
10		L01-S00-BH-J13	L04-S00-BH-J11
10		L01-S00-BH-J21	L04-S00-BH-J19
10		L02-S00-BH-J5	L04-S00-BH-J4
10		L02-S00-BH-J29	L04-S00-BH-J28
10		L02-S00-BH-J13	L04-S00-BH-J12
10		L02-S00-BH-J21	L04-S00-BH-J20
10		L02-S00-BH-J6	L05-S00-BH-J4
10		L02-S00-BH-J30	L05-S00-BH-J28
10		L02-S00-BH-J14	L05-S00-BH-J12
10		L02-S00-BH-J22	L05-S00-BH-J20
10		L03-S00-BH-J6	L05-S00-BH-J5
10		L03-S00-BH-J30	L05-S00-BH-J29
10		L03-S00-BH-J14	L05-S00-BH-J13
10		L03-S00-BH-J22	L05-S00-BH-J21
10		L04-S00-BH-J6	L05-S00-BH-J6
10		L04-S00-BH-J30	L05-S00-BH-J30
10		L04-S00-BH-J14	L05-S00-BH-J14
10		L04-S00-BH-J22	L05-S00-BH-J22

Upgrading from four frames to five frames

1. Remove switch cable connections as indicated in the following table. These cables will not be reused in this system.

Table A-43. Switch-to-switch cable removals for two-to-five frame upgrades

Length (m)	Cable s/n	From	To
5		L01-S00-BH-J29	L02-S00-BH-J29
5		L01-S00-BH-J12	L02-S00-BH-J12
5		L02-S00-BH-J30	L03-S00-BH-J30
5		L03-S00-BH-J11	L04-S00-BH-J11
5		L03-S00-BH-J22	L04-S00-BH-J22

2. Change switch cable connections as indicated in the following table. The removed cables are to be labeled and plugged into the new locations.

Table A-44. Switch-to-switch cable changes for four-to-five frame upgrades

		Removed location		New location	
Length (m)	Cable s/n	From	To	From	To
10		L01-S00-BH-J30	L03-S00-BH-J29	L01-S00-BH-J30	L05-S00-BH-J27
5		L02-S00-BH-J27	L03-S00-BH-J27	L02-S00-BH-J28	L03-S00-BH-J28
5		L02-S00-BH-J13	L03-S00-BH-J13	L02-S00-BH-J12	L03-S00-BH-J12
5		L01-S00-BH-J6	L02-S00-BH-J6	L01-S00-BH-J27	L02-S00-BH-J27
5		L03-S00-BH-J28	L04-S00-BH-J28	L03-S00-BH-J29	L04-S00-BH-J29
5		L03-S00-BH-J14	L04-S00-BH-J14	L03-S00-BH-J13	L04-S00-BH-J13
10		L01-S00-BH-J27	L03-S00-BH-J6	L01-S00-BH-J12	L03-S00-BH-J11
10		L01-S00-BH-J13	L03-S00-BH-J12	L01-S00-BH-J28	L03-S00-BH-J27
10		L02-S00-BH-J28	L04-S00-BH-J27	L02-S00-BH-J13	L04-S00-BH-J12
10		L02-S00-BH-J11	L04-S00-BH-J30	L02-S00-BH-J29	L04-S00-BH-J28
10		L01-S00-BH-J28	L04-S00-BH-J6	L01-S00-BH-J29	L04-S00-BH-J27
10		L01-S00-BH-J11	L04-S00-BH-J29	L01-S00-BH-J13	L04-S00-BH-J11
10		L01-S00-BH-J14	L04-S00-BH-J12	L01-S00-BH-J14	L05-S00-BH-J11
10		L02-S00-BH-J14	L04-S00-BH-J13	L02-S00-BH-J14	L05-S00-BH-J12
5		L01-S00-BH-J22	L02-S00-BH-J22	L01-S00-BH-J11	L02-S00-BH-J11

3. Install new external switch cables as indicated in the following table.

Table A-45. Switch-to-switch cable additions for four-to-five frame Upgrades

Length (m)	Cable s/n	From	To
10		L01-S00-BH-J6	L05-S00-BH-J3
10		L01-S00-BH-J22	L05-S00-BH-J19
10		L02-S00-BH-J6	L05-S00-BH-J4
10		L02-S00-BH-J30	L05-S00-BH-J28
10		L02-S00-BH-J22	L05-S00-BH-J20
10		L03-S00-BH-J6	L05-S00-BH-J5
10		L03-S00-BH-J30	L05-S00-BH-J29
10		L03-S00-BH-J14	L05-S00-BH-J13
10		L03-S00-BH-J22	L05-S00-BH-J21
10		L04-S00-BH-J6	L05-S00-BH-J6
10		L04-S00-BH-J30	L05-S00-BH-J30
10		L04-S00-BH-J14	L05-S00-BH-J14
10		L04-S00-BH-J22	L05-S00-BH-J22

Upgrading to a switch frame (F/C 2031, 2032)

1. Remove all existing switch-to-switch data cables or wrap plugs on odd-numbered jacks (J3-J35) on all switch assemblies.
2. Install switch cables as listed in “Switch frame (F/C 2031, 2032) cable connections” on page A-12.

Adding frames to a system with a switch frame

1. Referring to tables in “Switch frame (F/C 2031, 2032) cable connections” on page A-12, remove wrap plugs on entries marked by an asterisk (*) which correspond to the new frame(s) being added.
2. Install additional switch cables on the appropriate jacks per tables “Switch frame (F/C 2031, 2032) cable connections” on page A-12.

Appendix B. Installing cables for RS/6000 SP optional features

Use this section for the physical installation of cabling for RS/6000 SP optional features.

Note: When you attach external and internal cables to POWER3 High Nodes, ensure that you leave a 610-mm (2-ft.) service loop in the cables so that the node can be moved to the service position, seeFigure 1-17 on page 1-26.

Installing cables for PCI and Micro Channel Adapters

Use the information in this section to route I/O adapter cables.

Note: For additional I/O adapter cabling information, see the following:

- PCI – *Adapters, Devices and Cable Information for Multiple Bus Systems*, SA38-0516
- MCA – *Adapters, Devices and Cable Information for Micro Channel Bus Systems*, SA38-0533

Routing I/O adapter cables

Figure B-1 (1.93 m) and Figure B-2 on page B-2 (1.25 m and 2.01 m) are back views of the frames, showing the horizontal and vertical paths for routing cables from connector-to-connector. The depth dimension in the figures appears greater than it actually is.

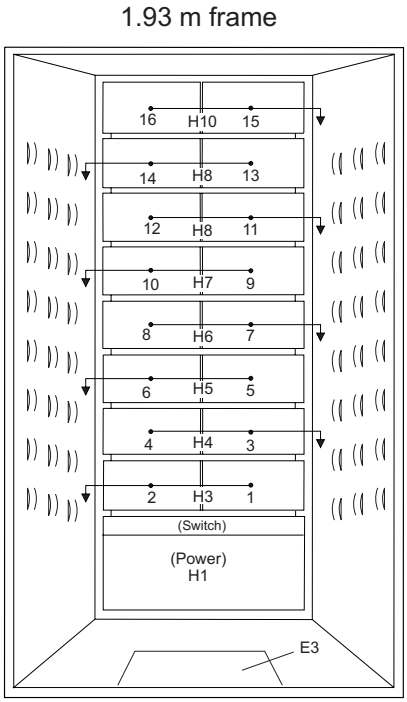

Figure B-1. Rear view of 1.93 m frames showing cable routing paths

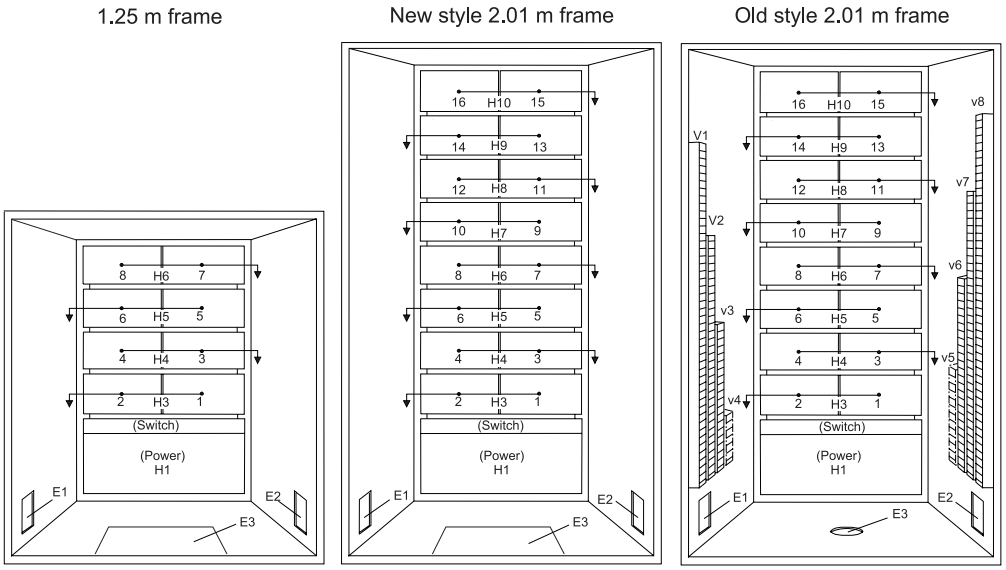

Figure B-2. Rear view of 1.25 m and 2.01 m frames showing cable routing paths

Table B-1. External cable routing

To Slot:	Cable Budget millimeters (inches)	Frame Entrance:	Vertical Routing:	Horizontal Routing:
1	1800 (71)	E3	V4	H3
2	1500 (59)	E3	V4	H3
3	1680 (66)	E3	V5	H4
4	1980 (78)	E3	V5	H4
5	2160 (85)	E3	V3	H5
6	1850 (73)	E3	V3	H5
7	2030 (80)	E3	V6	H6
8	2340 (92)	E3	V6	H6
9	2510 (99)	E3	V2	H7
10	2210 (87)	E3	V2	H7
11	2390 (94)	E3	V7	H8
12	2690 (106)	E3	V7	H8
13	2870 (113)	E3	V1	H9
14	2570 (101)	E3	V1	H9
15	2740 (108)	E3	V8	H10
16	3050 (120)	E3	V8	H10

Installing cables for the Block Multiplexer Channel Adapter (BMCA)

Refer to *Block Multiplexer Channel Adapter Feature Summary* (SA23-2483), for the BMCA requirements, configurations, and restrictions before installing this feature.

Due to cable restraints, processor nodes on a single channel string should be positioned next to one another, side by side, or one above the other. (See note 3 below.)

Notes:

1. If you experience difficulty in installing all of the cables exiting the frame through the frame cable exit hole, contact the next level of support.
2. There is a limit of 16 BMCA cables exiting each frame.
3. If your configuration requires that you space the adapters a greater distance apart, but are daisy chaining them on the same channel, **F/C 2753** can be used. This feature contains a Y-cable with one longer end that normally exits the SP2® frame.

   Using this feature will leave you with an extra bus-and-tag terminator and bus-and-tag cable.

Perform one of the following cabling procedures:

Cabling the BMCA feature to a single processor node

Follow this procedure to cable the BMCA feature to a single processor node in a RS/6000 SP frame:

1. Connect cable part number 54G3361 to the BMCA adapter card that you installed in the processor node as shown in Figure B-3.
2. Connect terminator part number 6473048 to the short end of this cable.
3. Connect cable 68F7211 to the long end of this same cable.
4. Connect the other end of cable part number 68F7211 to the standard I/O bus and tag that connects to the Customer's System/370™ or System/390®.

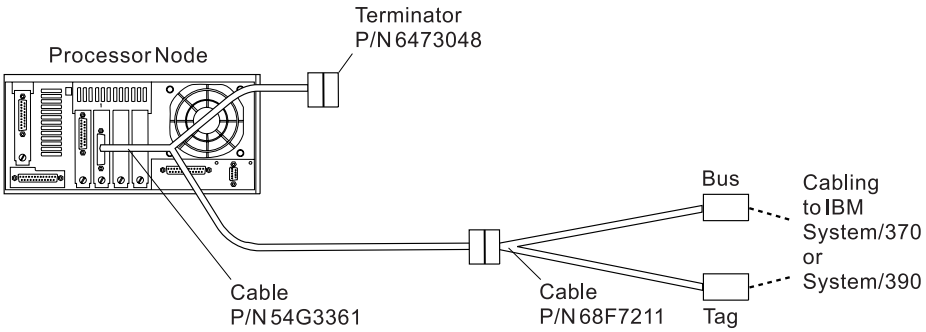

Figure B-3. BMCA cabling to a single processor node

Cabling the BMCA feature to multiple processor nodes

Follow this procedure to cable the BMCA feature to multiple processor nodes in a RS/6000 SP frame:

1. Determine which processor node will be the first in the string and then connect cable part number 54G3361 to the BMCA adapter card in that node as shown in Figure B-4 on page B-4.
2. The second processor node and each succeeding node receives cable 54G3360.
3. The cables attached to the second processor node, and all succeeding nodes are then connected together to form a daisy chain.
4. The loose end in the last cable on the daisy chain string receives terminator 6473048.
5. The free end of cable part number 54G3360 on the second node is connected to the short end of the first node cable part number 54G3361.

6. Connect cable part number 68F7211 to the long end of cable part number 54G3361 that you already connected to the first processor node in the string.
7. Connect the other end of cable part number 68F7211 to the standard I/O bus and tag that connects to the Customer's System/370 or System/390.
8. Ensure all S/B switches are set to the 'select' position.
9. Verify that the IOCDS for new channel devices have been completed, if required.
10. Cables should be run through the cable raceways where possible. If there is insufficient space in the raceways, cables should be run along outside of raceways, then ty-wrapped to provide strain relief from weight of cables.

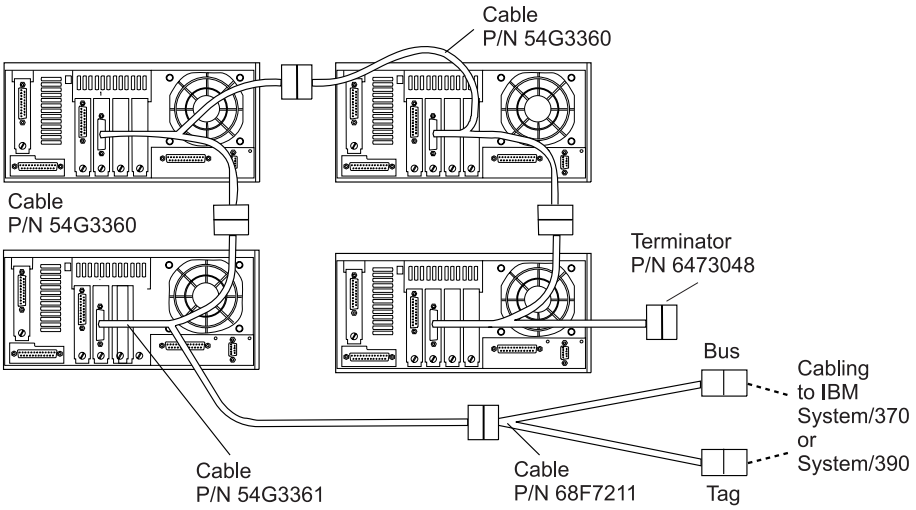

Figure B-4. BMCA cabling to a multiple processor nodes

Notices

This information was developed for products and services offered in the U.S.A.

IBM may not offer the products, services, or features discussed in this document in other countries. Consult your local IBM representative for information on the products and services currently available in your area. Any reference to an IBM product, program, or service is not intended to state or imply that only that IBM product, program, or service may be used. Any functionally equivalent product, program, or service that does not infringe any IBM intellectual property right may be used instead. However, it is the user's responsibility to evaluate and verify the operation of any non-IBM product, program, or service.

IBM may have patents or pending patent applications covering subject matter described in this document. The furnishing of this document does not give you any license to these patents. You can send license inquiries, in writing, to:

IBM Director of Licensing
IBM Corporation
North Castle Drive
Armonk, NY 10504-1785
U.S.A.

The following paragraph does not apply to the United Kingdom or any other country where such provisions are inconsistent with local law:

INTERNATIONAL BUSINESS MACHINES CORPORATION PROVIDES THIS PUBLICATION "AS IS" WITHOUT WARRANTY OF ANY KIND, EITHER EXPRESS OR IMPLIED, INCLUDING, BUT NOT LIMITED TO, THE IMPLIED WARRANTIES OF NON-INFRINGEMENT, MERCHANTABILITY OR FITNESS FOR A PARTICULAR PURPOSE. Some states do not allow disclaimer of express or implied warranties in certain transactions, therefore, this statement may not apply to you.

This information could include technical inaccuracies or typographical errors. Changes are periodically made to the information herein; these changes will be incorporated in new editions of the publication. IBM may make improvements and/or changes in the product(s) and/or the program(s) described in this publication at any time without notice.

IBM may use or distribute any of the information you supply in any way it believes appropriate without incurring any obligation to you.

Trademarks

The following terms are trademarks of the International Business Machines Corporation in the United States, other countries, or both:

AIX
@server
ESCON
Electronic Service Agent
IBM
IBMLink
Micro Channel
pSeries

RS/6000
Service Director
SP
TURBOWAYS

UNIX is a registered trademark in the United States and other countries licensed exclusively through X/Open Company Limited.

Other company, product, and service names may be the trademarks or service marks of others.

Electronic emissions notices

Federal Communications Commission (FCC) statement

This equipment has been tested and found to comply with the limits for a Class A digital device, pursuant to Part 15 of the FCC Rules. These limits are designed to provide reasonable protection against harmful interference when the equipment is operated in a commercial environment. This equipment generates, uses, and can radiate radio frequency energy and, if not installed and used in accordance with the instruction manual, may cause harmful interference to radio communications. Operation of this equipment in a residential area is likely to cause harmful interference, in which case the user will be required to correct the interference at his own expense.

Properly shielded and grounded cables and connectors must be used in order to meet FCC emission limits. IBM is not responsible for any radio or television interference caused by using other than recommended cables and connectors or by unauthorized changes or modifications to this equipment. Unauthorized changes or modifications could void the user's authority to operate the equipment.

This device complies with Part 15 of the FCC Rules. Operation is subject to the following two conditions: (1) this device may not cause harmful interference, and (2) this device must accept any interference received, including interference that may cause undesired operation.

European Union (EU) statement

This product is in conformity with the protection requirements of EU Council Directive 89/336/EEC on the approximation of the laws of the Member States relating to electromagnetic compatibility. The manufacturer cannot accept responsibility for any failure to satisfy the protection requirements resulting from a non-recommended modification of the product, including the fitting of option cards supplied by third parties. Consult with your dealer or sales representative for details on your specific hardware.

This product has been tested and found to comply with the limits for Class A Information Technology Equipment according to CISPR 22 / European Standard EN 55022. The limits for Class A equipment were derived for commercial and industrial environments to provide reasonable protection against interference with licensed communication equipment.

Attention: This is a Class A product. In a domestic environment this product may cause radio interference in which case the user may be required to take adequate measures.

United Kingdom telecommunications safety requirements

Notice to customers

This apparatus is approved under approval number NS/G/1234/J/100003 for indirect connection to public telecommunications systems in the United Kingdom.

Industry Canada compliance statement

This Class A digital apparatus meets the requirements of the Canadian Interference-Causing Equipment Regulations.

Cet appareil numérique de la classe A respecte toutes les exigences du Règlement sur le matériel brouilleur du Canada.

For installations in Japan:

この装置は、情報処理装置等電波障害自主規制協議会（ＶＣＣＩ）の基準に基づくクラスＡ情報技術装置です。この装置を家庭環境で使用すると電波妨害を引き起こすことがあります。この場合には使用者が適切な対策を講ずるよう要求されることがあります。

The following is a summary of the VCCI Japanese statement in the box above:

This is a Class A product based on the standard of the Voluntary Control Council for Interference by Information Technology Equipment (VCCI). If this equipment is used in a domestic environment, radio disturbance may arise. When such trouble occurs, the user may be required to take corrective actions.

Electromagnetic interference (EMI) statement - Taiwan

警告使用者:

這是甲類的資訊產品，在居住的環境中使用時，可能會造成射頻干擾，在這種情況下，使用者會被要求採取某些適當的對策。

The following is a summary of the EMI Taiwan statement above:

Warning: This is a Class A product. In a domestic environment this product may cause radio interference in which case the user will be required to take adequate measures.

Radio protection for Germany

Dieses Gerät ist berechtigt in Übereinstimmung mit Dem deutschen EMVG vom 9.Nov.92 das EG–Konformitätszeichen zu führen.

Der Aussteller der Konformitätserklärung ist die IBM Germany.

Dieses Gerät erfüllt die Bedingungen der EN 55022 Klasse A. Für diese von Geräten gilt folgende Bestimmung nach dem EMVG:

Geräte dürfen an Orten, für die sie nicht ausreichend entstört sind, nur mit besonderer Genehmigung des Bundesministers für Post und Telekommunikation oder des Bundesamtes für Post und Telekommunikation betrieben werden. Die Genehmigung wird erteilt, wenn keine elektromagnetischen Störungen zu erwarten sind.

(Auszug aus dem EMVG vom 9.Nov.92, Para.3, Abs.4)

Hinweis

Dieses Genehmigungsverfahren ist von der Deutschen Bundespost noch nicht veröffentlicht worden.

Glossary

A

ACL. Access Control List. A list that defines who has permission to access certain services; that is, for whom a server may perform certain tasks. This is usually a list of principals with the type of access assigned to each.

adapter. An adapter is a mechanism for attaching parts. For example, an adapter could be a part that electrically or physically connects a device to a computer or to another device. In the SP system, network connectivity is supplied by various adapters, some optional, that can provide connection to I/O devices, networks of workstations, and mainframe networks. Ethernet, FDDI, token-ring, HiPPI, SCSI, FCS, and ATM are examples of adapters that can be used as part of an SP system.

address. A character or group of characters that identifies a register, a device, a particular part of storage, or some other data source or destination.

AFS. A distributed file system that provides authentication services as part of its file system creation.

AIX. Abbreviation for Advanced Interactive Executive, IBM's licensed version of the UNIX operating system. AIX is particularly suited to support technical computing applications, including high function graphics and floating point computations.

Amd. Berkeley Software Distribution automount daemon.

API. Application Programming Interface. A set of programming functions and routines that provide access between the Application layer of the OSI seven-layer model and applications that want to use the network. It is a software interface.

application. The use to which a data processing system is put; for example, a payroll application, an airline reservation application.

application data. The data that is produced using an application program.

ARP. Address Resolution Protocol.

ATM. Asynchronous Transfer Mode. (See *TURBOWAYS 100 ATM Adapter*.)

authentication. The process of validating the identity of either a user of a service or the service itself. The process of a principal proving the authenticity of its identity.

authorization. The process of obtaining permission to access resources or perform tasks. In SP security services, authorization is based on the principal identifier. The granting of access rights to a principal.

authorization file. A type of ACL (access control list) used by the IBM AIX remote commands and the IBM PSSP Sysctl and Hardmon components.

B

batch processing. * (1) The processing of data or the accomplishment of jobs accumulated in advance in such a manner that each accumulation thus formed is processed or accomplished in the same run. * (2) The processing of data accumulating over a period of time. * (3) Loosely, the execution of computer programs serially. (4) Computer programs executed in the background.

BMCA. Block Multiplexer Channel Adapter. The block multiplexer channel connection allows the RS/6000 to communicate directly with a host System/370 or System/390; the host operating system views the system unit as a control unit.

BOS. The AIX Base Operating System.

C

call home function. The ability of a system to call the IBM support center and open a PMR to have a repair scheduled.

CDE. Common Desktop Environment. A graphical user interface for UNIX.

charge feature. An optional feature for either software or hardware for which there is a charge.

CLI. Command Line Interface.

client. * (1) A function that requests services from a server and makes them available to the user. * (2) A term used in an environment to identify a machine that uses the resources of the network.

Client Input/Output Sockets (CLIO/S). A software package that enables high-speed data and tape access between SP systems, AIX systems, and ES/9000 mainframes.

CLIO/S. Client Input/Output Sockets.

CMI. Centralized Management Interface provides a series of SMIT menus and dialogues used for defining and querying the SP system configuration.

Concurrent Virtual Shared Disk. A virtual shared disk that can be concurrently accessed by more than one server.

connectionless. A communication process that takes place without first establishing a connection.

connectionless network. A network in which the sending logical node must have the address of the receiving logical node before information interchange can begin. The packet is routed through nodes in the network based on the destination address in the packet. The originating source does not receive an acknowledgment that the packet was received at the destination.

control workstation. A single point of control allowing the administrator or operator to monitor and manage the SP system using the IBM AIX Parallel System Support Programs.

credentials. A protocol message, or part thereof, containing a ticket and an authenticator supplied by a client and used by a server to verify the client's identity.

css. Communication subsystem.

D

daemon. A process, not associated with a particular user, that performs system-wide functions such as administration and control of networks, execution of time-dependent activities, line printer spooling and so forth.

DASD. Direct Access Storage Device. Storage for input/output data.

DCE. Distributed Computing Environment.

DFS. distributed file system. A subset of the IBM Distributed Computing Environment.

DNS. Domain Name Service. A hierarchical name service which maps high level machine names to IP addresses.

E

Error Notification Object. An object in the SDR that is matched with an error log entry. When an error log entry occurs that matches the Notification Object, a user-specified action is taken.

ESCON. Enterprise Systems Connection. The ESCON channel connection allows the RS/6000 to communicate directly with a host System/390; the host operating system views the system unit as a control unit.

Ethernet. (1) Ethernet is the standard hardware for TCP/IP local area networks in the UNIX marketplace. It is a 10-megabit per second baseband type LAN that allows multiple stations to access the transmission medium at will without prior coordination, avoids contention by using carrier sense and deference, and resolves contention by collision detection (CSMA/CD). (2) A passive coaxial cable whose interconnections contain devices or components, or both, that are all active. It uses CSMA/CD technology to provide a best-effort delivery system.

Ethernet network. A baseband LAN with a bus topology in which messages are broadcast on a coaxial cabling using the carrier sense multiple access/collision detection (CSMA/CD) transmission method.

event. In Event Management, the notification that an expression evaluated to true. This evaluation occurs each time an instance of a resource variable is observed.

expect. Programmed dialogue with interactive programs.

expression. In Event Management, the relational expression between a resource variable and other elements (such as constants or the previous value of an instance of the variable) that, when true, generates an event. An example of an expression is `X < 10` where X represents the resource variable `IBM.PSSP.aixos.PagSp.%totalfree` (the percentage of total free paging space). When the expression is true, that is, when the total free paging space is observed to be less than 10%, the Event Management subsystem generates an event to notify the appropriate application.

F

failover. Also called fallover, the sequence of events when a primary or server machine fails and a secondary or backup machine assumes the primary workload. This is a disruptive failure with a short recovery time.

fall back. Also called fallback, the sequence of events when a primary or server machine takes back control of its workload from a secondary or backup machine.

FDDI. Fiber Distributed Data Interface.

FFDC. First Failure Data Capture.

Fiber Distributed Data Interface (FDDI). An American National Standards Institute (ANSI) standard for 100-megabit-per-second LAN using optical fiber cables. An FDDI local area network (LAN) can be up to 100 km (62 miles) and can include up to 500 system units. There can be up to 2 km (1.24 miles) between system units and concentrators.

file. * A set of related records treated as a unit, for example, in stock control, a file could consist of a set of invoices.

file name. A CMS file identifier in the form of 'filename filetype filemode' (like: TEXT DATA A).

file server. A centrally located computer that acts as a storehouse of data and applications for numerous users of a local area network.

File Transfer Protocol (FTP). The Internet protocol (and program) used to transfer files between hosts. It is an application layer protocol in TCP/IP that uses TELNET and TCP protocols to transfer bulk-data files between machines or hosts.

First Failure Data Capture (FFDC). A set of utilities used for recording persistent records of failures and significant software incidents. It provides a means of associating failures to one another, thus allowing software to link effects of a failure to their causes and thereby facilitating discovery of the root cause of a failure.

foreign host. Any host on the network other than the local host.

FTP. File transfer protocol.

G

gateway. An intelligent electronic device interconnecting dissimilar networks and providing protocol conversion for network compatibility. A gateway provides transparent access to dissimilar networks for nodes on either network. It operates at the session presentation and application layers.

H

HACMP. High Availability Cluster Multi-Processing for AIX.

HACWS. High Availability Control Workstation function, based on HACMP, provides for a backup control workstation for the SP system.

HAL. Hardware Abstraction Layer, a communication device interface that provides communication channels for processes.

Hashed Shared Disk (HSD). The data striping device for the IBM Virtual Shared Disk. The device driver lets application programs stripe data across physical disks in multiple IBM Virtual Shared Disks, thus reducing I/O bottlenecks.

help key. In the SP graphical interface, the key that gives you access to the SP graphical interface help facility.

High Availability Cluster Multi-Processing. An IBM facility to cluster nodes or components to provide high availability by eliminating single points of failure.

HiPPI. High Performance Parallel Interface. RS/6000 units can attach to a HiPPI network as defined by the ANSI specifications. The HiPPI channel supports burst rates of 100 Mbps over dual simplex cables; connections can be up to 25 km in length as defined by the standard and can be extended using third-party HiPPI switches and fiber optic extenders.

home directory. The directory associated with an individual user.

host. A computer connected to a network, and providing an access method to that network. A host provides end-user services.

I

instance vector. Obsolete term for resource identifier.

Intermediate Switch Board. Switches mounted in the switch expansion frame.

Internet. A specific inter-network consisting of large national backbone networks such as APARANET, MILNET, and NSFnet, and a myriad of regional and campus networks all over the world. The network uses the TCP/IP protocol suite.

Internet Protocol (IP). (1) A protocol that routes data through a network or interconnected networks. IP acts as an interface between the higher logical layers and the physical network. This protocol, however, does not provide error recovery, flow control, or guarantee the reliability of the physical network. IP is a connectionless protocol. (2) A protocol used to route data from its source to it destination in an Internet environment.

IP address. A 32-bit address assigned to devices or hosts in an IP internet that maps to a physical address. The IP address is composed of a network and host portion.

ISB. Intermediate Switch Board.

K

Kerberos. A service for authenticating users in a network environment.

kernel. The core portion of the UNIX operating system which controls the resources of the CPU and allocates them to the users. The kernel is memory-resident, is said to run in "kernel mode" and is protected from user tampering by the hardware.

Kernel Low-Level Application Programming Interface (KLAPI). KLAPI provides transport service for communication using the SP Switch.

L

LAN. (1) Acronym for Local Area Network, a data network located on the user's premises in which serial transmission is used for direct data communication among data stations. (2) Physical network technology that transfers data a high speed over short distances. (3) A network in which a set of devices is connected to another for communication and that can be connected to a larger network.

local host. The computer to which a user's terminal is directly connected.

log database. A persistent storage location for the logged information.

log event. The recording of an event.

log event type. A particular kind of log event that has a hierarchy associated with it.

logging. The writing of information to persistent storage for subsequent analysis by humans or programs.

M

mask. To use a pattern of characters to control retention or elimination of portions of another pattern of characters.

menu. A display of a list of available functions for selection by the user.

Motif. The graphical user interface for OSF, incorporating the X Window System. Also called OSF/Motif.

MTBF. Mean time between failure. This is a measure of reliability.

MTTR. Mean time to repair. This is a measure of serviceability.

N

naive application. An application with no knowledge of a server that fails over to another server. Client to server retry methods are used to reconnect.

network. An interconnected group of nodes, lines, and terminals. A network provides the ability to transmit data to and receive data from other systems and users.

NFS. Network File System. NFS allows different systems (UNIX or non-UNIX), different architectures, or vendors connected to the same network, to access remote files in a LAN environment as though they were local files.

NIM. Network Installation Management is provided with AIX to install AIX on the nodes.

NIM client. An AIX system installed and managed by a NIM master. NIM supports three types of clients:
- Standalone
- Diskless
- Dataless

NIM master. An AIX system that can install one or more NIM clients. An AIX system must be defined as a NIM master before defining any NIM clients on that system. A NIM master managers the configuration database containing the information for the NIM clients.

NIM object. A representation of information about the NIM environment. NIM stores this information as objects in the NIM database. The types of objects are:
- Network
- Machine
- Resource

NIS. Network Information System.

node. In a network, the point where one or more functional units interconnect transmission lines. A computer location defined in a network. The SP system can house several different types of nodes for both serial and parallel processing. These node types can include thin nodes, wide nodes, 604 high nodes, as well as other types of nodes both internal and external to the SP frame.

Node Switch Board. Switches mounted on frames that contain nodes.

NSB. Node Switch Board.

NTP. Network Time Protocol.

O

ODM. Object Data Manager. In AIX, a hierarchical object-oriented database for configuration data.

P

parallel environment. A system environment where message passing or SP resource manager services are used by the application.

Parallel Environment. A licensed IBM program used for message passing applications on the SP or RS/6000 platforms.

parallel processing. A multiprocessor architecture which allows processes to be allocated to tightly coupled multiple processors in a cooperative processing environment, allowing concurrent execution of tasks.

parameter. * (1) A variable that is given a constant value for a specified application and that may denote

the application. * (2) An item in a menu for which the operator specifies a value or for which the system provides a value when the menu is interpreted. * (3) A name in a procedure that is used to refer to an argument that is passed to the procedure. * (4) A particular piece of information that a system or application program needs to process a request.

partition. See system partition.

Perl. Practical Extraction and Report Language.

perspective. The primary window for each SP Perspectives application, so called because it provides a unique view of an SP system.

pipe. A UNIX utility allowing the output of one command to be the input of another. Represented by the | symbol. It is also referred to as filtering output.

PMR. Problem Management Report.

POE. Formerly Parallel Operating Environment, now Parallel Environment for AIX.

port. (1) An end point for communication between devices, generally referring to physical connection. (2) A 16-bit number identifying a particular TCP or UDP resource within a given TCP/IP node.

predicate. Obsolete term for expression.

Primary node or machine. (1) A device that runs a workload and has a standby device ready to assume the primary workload if that primary node fails or is taken out of service. (2) A node on the switch that initializes, provides diagnosis and recovery services, and performs other operations to the switch network. (3) In IBM Virtual Shared Disk function, when physical disks are connected to two nodes (twin-tailed), one node is designated as the primary node for each disk and the other is designated the secondary, or backup, node. The primary node is the server node for IBM Virtual Shared Disks defined on the physical disks under normal conditions. The secondary node can become the server node for the disks if the primary node is unavailable (off-line or down).

Problem Management Report. The number in the IBM support mechanism that represents a service incident with a customer.

process. * (1) A unique, finite course of events defined by its purpose or by its effect, achieved under defined conditions. * (2) Any operation or combination of operations on data. * (3) A function being performed or waiting to be performed. * (4) A program in operation. For example, a daemon is a system process that is always running on the system.

protocol. A set of semantic and syntactic rules that defines the behavior of functional units in achieving communication.

R

RAID. Redundant array of independent disks.

rearm expression. In Event Management, an expression used to generate an event that alternates with an original event expression in the following way: the event expression is used until it is true, then the rearm expression is used until it is true, then the event expression is used, and so on. The rearm expression is commonly the inverse of the event expression (for example, a resource variable is on or off). It can also be used with the event expression to define an upper and lower boundary for a condition of interest.

rearm predicate. Obsolete term for rearm expression.

remote host. *See foreign host*.

resource. In Event Management, an entity in the system that provides a set of services. Examples of resources include hardware entities such as processors, disk drives, memory, and adapters, and software entities such as database applications, processes, and file systems. Each resource in the system has one or more attributes that define the state of the resource.

resource identifier. In Event Management, a set of elements, where each element is a name/value pair of the form `name=value`, whose values uniquely identify the copy of the resource (and by extension, the copy of the resource variable) in the system.

resource monitor. A program that supplies information about resources in the system. It can be a command, a daemon, or part of an application or subsystem that manages any type of system resource.

resource variable. In Event Management, the representation of an attribute of a resource. An example of a resource variable is `IBM.AIX.PagSp.%totalfree`, which represents the percentage of total free paging space. `IBM.AIX.PagSp` specifies the resource name and `%totalfree` specifies the resource attribute.

RISC. Reduced Instruction Set Computing (RISC), the technology for today's high performance personal computers and workstations, was invented in 1975. Uses a small simplified set of frequently used instructions for rapid execution.

rlogin (remote LOGIN). A service offered by Berkeley UNIX systems that allows authorized users of one machine to connect to other UNIX systems across a network and interact as if their terminals were connected directly. The rlogin software passes information about the user's environment (for example, terminal type) to the remote machine.

RPC. Acronym for Remote Procedure Call, a facility that a client uses to have a server execute a procedure call. This facility is composed of a library of procedures plus an XDR.

RSH. A variant of RLOGIN command that invokes a command interpreter on a remote UNIX machine and passes the command line arguments to the command interpreter, skipping the LOGIN step completely. See also *rlogin*.

S

SCSI. Small Computer System Interface.

Secondary node. In IBM Virtual Shared Disk function, when physical disks are connected to two nodes (twin-tailed), one node is designated as the primary node for each disk and the other is designated as the secondary, or backup, node. The secondary node acts as the server node for the IBM Virtual Shared disks defined on the physical disks if the primary node is unavailable (off-line or down).

server. (1) A function that provides services for users. A machine may run client and server processes at the same time. (2) A machine that provides resources to the network. It provides a network service, such as disk storage and file transfer, or a program that uses such a service. (3) A device, program, or code module on a network dedicated to providing a specific service to a network. (4) On a LAN, a data station that provides facilities to other data stations. Examples are file server, print server, and mail server.

shell. The shell is the primary user interface for the UNIX operating system. It serves as command language interpreter, programming language, and allows foreground and background processing. There are three different implementations of the shell concept: Bourne, C and Korn.

Small Computer System Interface (SCSI). An input and output bus that provides a standard interface for the attachment of various direct access storage devices (DASD) and tape drives to the RS/6000.

Small Computer Systems Interface Adapter (SCSI Adapter). An adapter that supports the attachment of various direct-access storage devices (DASD) and tape drives to the RS/6000.

SMIT. The System Management Interface Toolkit is a set of menu driven utilities for AIX that provides functions such as transaction login, shell script creation, automatic updates of object database, and so forth.

SNMP. Simple Network Management Protocol. (1) An IP network management protocol that is used to monitor attached networks and routers. (2) A TCP/IP-based protocol for exchanging network management information and outlining the structure for communications among network devices.

socket. (1) An abstraction used by Berkeley UNIX that allows an application to access TCP/IP protocol functions. (2) An IP address and port number pairing. (3) In TCP/IP, the Internet address of the host computer on which the application runs, and the port number it uses. A TCP/IP application is identified by its socket.

standby node or machine. A device that waits for a failure of a primary node in order to assume the identity of the primary node. The standby machine then runs the primary's workload until the primary is back in service.

subnet. Shortened form of subnetwork.

subnet mask. A bit template that identifies to the TCP/IP protocol code the bits of the host address that are to be used for routing for specific subnetworks.

subnetwork. Any group of nodes that have a set of common characteristics, such as the same network ID.

subsystem. A software component that is not usually associated with a user command. It is usually a daemon process. A subsystem will perform work or provide services on behalf of a user request or operating system request.

SUP. Software Update Protocol.

switch capsule. A group of SP frames consisting of a switched frame and its companion non-switched frames.

Sysctl. Secure System Command Execution Tool. An authenticated client/server system for running commands remotely and in parallel.

syslog. A BSD logging system used to collect and manage other subsystem's logging data.

System Administrator. The user who is responsible for setting up, modifying, and maintaining the SP system.

system partition. A group of nonoverlapping nodes on a switch chip boundary that act as a logical SP system.

T

tar. Tape ARchive, is a standard UNIX data archive utility for storing data on tape media.

TaskGuides. SP TaskGuides are a form of advanced online assistance designed to walk you through complex or infrequently performed tasks. Each TaskGuide does not simply list the required steps. It actually performs the steps for you, automating the steps to the highest degree possible and prompting you for input only when absolutely necessary. You might recognize them as *wizards*.

Tcl. Tool Command Language.

TclX. Tool Command Language Extended.

TCP. Acronym for Transmission Control Protocol, a stream communication protocol that includes error recovery and flow control.

TCP/IP. Acronym for Transmission Control Protocol/Internet Protocol, a suite of protocols designed to allow communication between networks regardless of the technologies implemented in each network. TCP provides a reliable host-to-host protocol between hosts in packet-switched communications networks and in interconnected systems of such networks. It assumes that the underlying protocol is the Internet Protocol.

Telnet. Terminal Emulation Protocol, a TCP/IP application protocol that allows interactive access to foreign hosts.

ticket. An encrypted protocol message used to securely pass the identity of a user from a client to a server.

Tk. Tcl-based Tool Kit for X Windows.

TMPCP. Tape Management Program Control Point.

token-ring. (1) Network technology that controls media access by passing a token (special packet or frame) between media-attached machines. (2) A network with a ring topology that passes tokens from one attaching device (node) to another. (3) The IBM Token-Ring LAN connection allows the RS/6000 system unit to participate in a LAN adhering to the IEEE 802.5 Token-Passing Ring standard or the ECMA standard 89 for Token-Ring, baseband LANs.

transaction. An exchange between the user and the system. Each activity the system performs for the user is considered a transaction.

transceiver (transmitter-receiver). A physical device that connects a host interface to a local area network, such as Ethernet. Ethernet transceivers contain electronics that apply signals to the cable and sense collisions.

transfer. To send data from one place and to receive the data at another place. Synonymous with move.

transmission. * The sending of data from one place for reception elsewhere.

TURBOWAYS 100 ATM Adapter. An IBM high-performance, high-function intelligent adapter that provides dedicated 100 Mbps ATM (asynchronous transfer mode) connection for high-performance servers and workstations.

U

UDP. User Datagram Protocol.

UNIX operating system. An operating system developed by Bell Laboratories that features multiprogramming in a multiuser environment. The UNIX operating system was originally developed for use on minicomputers, but has been adapted for mainframes and microcomputers. **Note:** The AIX operating system is IBM's implementation of the UNIX operating system.

user. Anyone who requires the services of a computing system.

User Datagram Protocol (UDP). (1) In TCP/IP, a packet-level protocol built directly on the Internet Protocol layer. UDP is used for application-to-application programs between TCP/IP host systems. (2) A transport protocol in the Internet suite of protocols that provides unreliable, connectionless datagram service. (3) The Internet Protocol that enables an application programmer on one machine or process to send a datagram to an application program on another machine or process.

user ID. A nonnegative integer, contained in an object of type *uid_t*, that is used to uniquely identify a system user.

V

Virtual Shared Disk, IBM. The function that allows application programs executing at different nodes of a system partition to access a raw logical volume as if it were local at each of the nodes. In actuality, the logical volume is local at only one of the nodes (the server node).

W

workstation. * (1) A configuration of input/output equipment at which an operator works. * (2) A terminal or microcomputer, usually one that is connected to a mainframe or to a network, at which a user can perform applications.

X

X Window System. A graphical user interface product.

Bibliography

This bibliography helps you find product documentation related to the RS/6000 SP hardware and software products.

You can find most of the IBM product information for RS/6000 SP products on the World Wide Web. Formats for both viewing and downloading are available.

PSSP documentation is shipped with the PSSP product in a variety of formats and can be installed on your system. The man pages for public code that PSSP includes are also available online.

Finally, this bibliography contains a list of non-IBM publications that discuss parallel computing and other topics related to the RS/6000 SP.

Information formats

Documentation supporting RS/6000 SP software licensed programs is no longer available from IBM in hardcopy format. However, you can view, search, and print documentation in the following ways:

- On the World Wide Web
- Online from the product media or the SP Resource Center

Finding documentation on the World Wide Web

You can view a book or download a Portable Document Format (PDF) version of it. At the time this manual was published, the Web address of the ″RS/6000 SP Hardware and Software Books″ page was:

http://www.ibm.com/servers/eserver/pseries/library/sp_books/index.html.

However, the structure of the RS/6000 Web site can change over time.

Accessing PSSP documentation online

On the same medium as the PSSP product code, IBM ships PSSP man pages, HTML files, and PDF files. In order to use these publications, you must first install the **ssp.docs** file set.

To view the PSSP HTML publications, you need access to an HTML document browser such as Netscape. The HTML files and an index that links to them are installed in the **/usr/lpp/ssp/html** directory. Once installed, you can also view the HTML files from the RS/6000 SP Resource Center.

If you have installed the SP Resource Center on your SP system, you can access it by entering the **/usr/lpp/ssp/bin/resource_center** command. If you have the SP Resource Center on CD-ROM, see the **readme.txt** file for information about how to run it.

To view the PSSP PDF publications, you need access to the Adobe Acrobat Reader. The Acrobat Reader is shipped with the AIX Version 4.3 Bonus Pack and is also freely available for downloading from the Adobe Web site at:

http://www.adobe.com

To successfully print a large PDF file (approximately 300 or more pages) from the Adobe Acrobat reader, you may need to select the “Download Fonts Once” button on the Print window.

Manual pages for public code

The following manual pages for public code are available in this product:

SUP /usr/lpp/ssp/man/man1/sup.1

Perl (Version 4.036)

/usr/lpp/ssp/perl/man/perl.man

/usr/lpp/ssp/perl/man/h2ph.man

/usr/lpp/ssp/perl/man/s2p.man

/usr/lpp/ssp/perl/man/a2p.man

Manual pages and other documentation for **Tcl**, **TclX**, **Tk**, and **expect** can be found in the compressed **tar** files located in the **/usr/lpp/ssp/public** directory.

RS/6000 SP planning publications

This section lists the IBM product documentation for planning for the IBM RS/6000 SP hardware and software.

IBM RS/6000 SP:

- *Planning, Volume 1, Hardware and Physical Environment*, GA22-7280
- *Planning, Volume 2, Control Workstation and Software Environment*, GA22-7281

RS/6000 SP hardware publications

This section lists the IBM product documentation for the IBM RS/6000 SP hardware.

IBM RS/6000 SP:

- *Planning, Volume 1, Hardware and Physical Environment*, GA22-7280
- *Planning, Volume 2, Control Workstation and Software Environment*, GA22-7281
- *Installation and Relocation*, GA22-7441
- *System Service Guide*, GA22-7442
- *SP Switch Service Guide*, GA22-7443
- *SP Switch2 Service Guide*, GA22-7444
- *Uniprocessor Node Service Guide*, GA22-7445
- *604 and 604e SMP High Node Service Guide*, GA22-7446
- *SMP Thin and Wide Node Service Guide*, GA22-7447
- *POWER3 SMP High Node Service Guide*, GA22-7448
- *Safety Information*, GA22-7467

RS/6000 SP standard ship group publications

- *RS/6000 SP: Installation and Relocation*, GA22-7441
- *RS/6000 SP: Safety Information*, GA22-7467
- *RS/6000 SP and @serverCluster 1600: Hardware Manuals*, GK3T-4268 (CD)
- *Service Director for RS/6000 Information Guide Code Version 3.1*, SA38-0383
- *Electronic Service Agent for pSeries and RS/6000 User's Guide*, SC38-7105

RS/6000 SP Switch Router publications

The RS/6000 SP Switch Router is based on the Ascend GRF switched IP router product from Lucent Technologies. You can order the SP Switch Router as the IBM 9077.

The following publications are shipped with the SP Switch Router. You can also order these publications from IBM using the order numbers shown.

- *Ascend GRF GateD Manual*, GA22-7327
- *Ascend GRF 400/1600 Getting Started*, GA22-7368
- *Ascend GRF Configuration and Management*, GA22-7366
- *Ascend GRF Reference Guide*, GA22-7367
- *SP Switch Router Adapter Guide*, GA22-7310

Adapter publications

- *SP Switch Router Adapter Guide*, GA22-7310
- *FDDI Introduction and Planning Guide*, GA27-3892
- *FDDI User's Guide and Programming Reference*, SC28-2823
- *Planning for Fiber Optic Channel Links*, GA23-0367
- *IBM Token-Ring Network Introduction and Planning Guide*, GA27-3677
- *RS/6000 Token Ring Adapter Card*, G511-1681
- *HIPPI User's Guide and Programmer's Reference*, SA23-0369 and SA23-2488
- *AIX Parallel and ESCON Channel Tape Attachment/6000 Installation and User's Guide*, GA32-0311
- *9334 SCSI Expansion Units Operator Guide*, GA33-3232
- *9334 Models 010 and 011 SCSI Expansion Units: Installation and Service Guide*, SY33-0165
- *9334 Models 500 and 501 SCSI Expansion Units: Installation and Service Guide*, SY33-0167
- *SCSI-2 Fast/Wide Adapter*, SC23-2646
- *IBM SCSI-2 Fast/Wide Adapter/A Technical Reference*, S83G-7545
- *Turboways 100 User's Guide ATM*, GA27-4057
- *9333 Model 010 and 011 High-Performance Disk-Drive Subsystem Operator Guide*, GA33-3208
- *9333 Model 010 and 011 High-Performance Disk-Drive Subsystem Installation and Service Guide*, SY33-0161
- *9333 Model 010 and 011 High-Performance Disk-Drive Subsystem Hardware Technical Information*, SA33-3209
- *9333 Model 500 and 501 High-Performance Disk-Drive Subsystem Operator Guide*, GA33-3234

- *9333 Model 500 and 501 High-Performance Disk-Drive Subsystem Installation and Service Guide*, SY33-0168
- *9333 Model 500 and 501 High-Performance Disk-Drive Subsystem Hardware Technical Information*, SA33-3235
- *IBM SCSI Tape Drive, Medium Changer, and Library Device Drivers Installation and User's Guide*, GC35-0154

Network connectivity

- *IBM LAN Cabling System Planning and Installation Guide*, GA27-3361
- *IBM Cabling System Optical Fiber Planning and Installation Guide*, GA27-3943
- *IBM 8250/8260/8285 Planning and Site Preparation Guide*, GA33-0285
- *IBM 6611 Network Processor: Introduction and Planning Guide*, GK2T-0334

Other service publications

- *IBM AIX Version 3.2 Problem Solving Guide and Reference*, SC23-2204
- *IBM AIX Version 4 Problem Solving Guide and Reference*, SC23-2606
- *IBM AIX Version 4.3 Problem Solving Guide and Reference*, SC23-4123
- *7012 300 Series Operator Guide*, SA23-2623
- *7012 300 Series Installation and Service Guide*, SA23-2624
- *7013 500 Series Operator Guide*, SA38-0530
- *7013 500 Series Installation and Service Guide*, SA38-0531
- *Electrical Safety for IBM Customer Engineers*, S229-8124
- *7015 Model R30 CPU Enclosure Operator Guide*, SA23-2742
- *7015 Model R30 CPU Enclosure Installation and Service Guide*, SA23-2743
- *RS/6000 7017 S Series Installation and Service Guide*, SA38-0548
- *Supplement for RS/6000 7017 S Series Installation and Service*, SN32-9059
- *RS/6000 7017 S Series User's Guide* , SA38-0549
- *IBM General Information Manual: Installation Manual-Physical Planning*, GC22–7072

Related hardware publications

For publications on the latest IBM @server pSeries and RS/6000 hardware products, see the Web site:

http://www.ibm.com/servers/eserver/pseries/library/hardware_docs/

That site includes links to the following:

- General service documentation
- Guides by system (pSeries and RS/6000)
- Installable options
- Hardware Management Console for pSeries guides

RS/6000 SP software publications

This section lists the IBM product documentation for software products related to the IBM RS/6000 SP. These products include:

- IBM Parallel System Support Programs for AIX (PSSP)
- IBM LoadLeveler for AIX 5L (LoadLeveler)
- IBM Parallel Environment for AIX (Parallel Environment)
- IBM General Parallel File System for AIX (GPFS)
- IBM Engineering and Scientific Subroutine Library (ESSL) for AIX
- IBM Parallel ESSL for AIX
- IBM High Availability Cluster Multi-Processing for AIX (HACMP)
- IBM Client Input Output/Sockets (CLIO/S)
- IBM Network Tape Access and Control System for AIX (NetTAPE)

PSSP publications

IBM RS/6000 SP:

- *Planning, Volume 2, Control Workstation and Software Environment*, GA22-7281

PSSP:

- *Installation and Migration Guide*, GA22-7347
- *Administration Guide*, SA22-7348
- *Managing Shared Disks*, SA22-7349
- *Diagnosis Guide*, GA22-7350
- *Command and Technical Reference*, SA22-7351
- *Messages Reference*, GA22-7352
- *Implementing a Firewalled RS/6000 SP System*, GA22-7874

RS/6000 Cluster Technology (RSCT):

- *Event Management Programming Guide and Reference*, SA22-7354
- *Group Services Programming Guide and Reference*, SA22-7355
- *First Failure Data Capture Programming Guide and Reference*, SA22-7454

LoadLeveler publications

LoadLeveler:

- *Using and Administering*, SA22-7881
- *Diagnosis and Messages Guide*, GA22-7882
- *Install Memo*, GI11-2816

GPFS publications

GPFS:

- *Problem Determination Guide*, GA22-7434
- *Administration and Programming Reference*, SA22-7452
- *Concepts, Planning, and Installation*, GA22-7453

Parallel Environment publications

Parallel Environment:

- *Installation Guide*, GA22-7418
- *Messages*, GA22-7419
- *DPCL Programming Guide*, SA22-7420
- *DPCL Class Reference*, SA22-7421
- *MPI Programming Guide*, SA22-7422
- *MPI Subroutine Reference*, SA22-7423
- *Hitchhiker's Guide*, SA22-7424
- *Operation and Use, Volume 1*, SA22-7425
- *Operation and Use, Volume 2*, SA22-7426
- *MPL Programming and Subroutine Reference*, GC23-3893

Parallel ESSL and ESSL publications

- *ESSL Products: General Information*, GC23-0529
- *Parallel ESSL: Guide and Reference*, SA22-7273
- *ESSL: Guide and Reference*, SA22-7272

HACMP publications

HACMP:

- *Concepts and Facilities*, SC23-4276
- *Planning Guide*, SC23-4277
- *Installation Guide*, SC23-4278
- *Administration Guide*, SC23-4279
- *Troubleshooting Guide*, SC23-4280
- *Programming Locking Applications*, SC23-4281
- *Programming Client Applications*, SC23-4282
- *Master Index and Glossary*, SC23-4285
- *HANFS for AIX Installation and Administration Guide*, SC23-4283
- *Enhanced Scalability Installation and Administration Guide, Volume 1*, SC23-4284
- *Enhanced Scalability Installation and Administration Guide, Volume 2*, SC23-4306

AIX publications

You can find links to the latest AIX publications on the Web at:

http://www.ibm.com/servers/aix/library/techpubs.html

You can view the common file information at:

sh2n06.pok.ibm.com/afs/aix/u/spbooks/drafts/pssp/am0xxmst.pdf

DCE publications

The DCE library consists of the following books:

- *IBM DCE 3.1 for AIX: Administration Commands Reference*
- *IBM DCE 3.1 for AIX: Administration Guide—Introduction*
- *IBM DCE 3.1 for AIX: Administration Guide—Core Components*
- *IBM DCE 3.1 for AIX: DFS Administration Guide and Reference*

- *IBM DCE 3.1 for AIX: Application Development Guide—Introduction and Style Guide*
- *IBM DCE 3.1 for AIX: Application Development Guide—Core Components*
- *IBM DCE 3.1 for AIX: Application Development Guide—Directory Services*
- *IBM DCE 3.1 for AIX: Application Development Reference*
- *IBM DCE 3.1 for AIX: Problem Determination Guide*
- *IBM DCE 3.1 for AIX: Release Notes*

You can view a DCE book or download a Portable Document Format (PDF) version of it from the IBM DCE Web site at:

http://www.ibm.com/software/network/dce/library

Redbooks

IBM's International Technical Support Organization (ITSO) has published a number of redbooks related to the RS/6000 SP. For a current list, see the ITSO Web site at:

http://www.ibm.com/redbooks

Non-IBM publications

Here are some non-IBM publications that you may find helpful.

- Almasi, G., Gottlieb, A., *Highly Parallel Computing*, Benjamin-Cummings Publishing Company, Inc., 1989.
- Foster, I., *Designing and Building Parallel Programs*, Addison-Wesley, 1995.
- Gropp, W., Lusk, E., Skjellum, A., *Using MPI*, The MIT Press, 1994.
- Message Passing Interface Forum, *MPI: A Message-Passing Interface Standard, Version 1.1*, University of Tennessee, Knoxville, Tennessee, June 6, 1995.
- Message Passing Interface Forum, *MPI-2: Extensions to the Message-Passing Interface, Version 2.0*, University of Tennessee, Knoxville, Tennessee, July 18, 1997.
- Ousterhout, John K., *Tcl and the Tk Toolkit*, Addison-Wesley, Reading, MA, 1994, ISBN 0-201-63337-X.
- Pfister, Gregory, F., *In Search of Clusters*, Prentice Hall, 1998.
- Barrett, D., Silverman, R., *SSH The Secure Shell The Definitive Guide*, O'Reilly, 2001.

Index

Numerics

A

C

E

F

H

I

M

N

P

R

S

T

U

V

W

Reader's comments – We'd like to hear from you

RS/6000 SP
Installation and Relocation

Publication No. GA22-7441-05

Overall, how satisfied are you with the information in this book?

	Very Satisfied	Satisfied	Neutral	Dissatisfied	Very Dissatisfied
Overall satisfaction	☐	☐	☐	☐	☐

How satisfied are you that the information in this book is:

	Very Satisfied	Satisfied	Neutral	Dissatisfied	Very Dissatisfied
Accurate	☐	☐	☐	☐	☐
Complete	☐	☐	☐	☐	☐
Easy to find	☐	☐	☐	☐	☐
Easy to understand	☐	☐	☐	☐	☐
Well organized	☐	☐	☐	☐	☐
Applicable to your tasks	☐	☐	☐	☐	☐

Please tell us how we can improve this book:

Thank you for your responses. May we contact you? ☐ Yes ☐ No

When you send comments to IBM, you grant IBM a nonexclusive right to use or distribute your comments in any way it believes appropriate without incurring any obligation to you.

Name

Address

Company or Organization

Phone No.

Readers' Comments — We'd Like to Hear from You
GA22-7441-05

Cut or Fold
Along Line

Fold and Tape | **Please do not staple** | Fold and Tape

NO POSTAGE
NECESSARY
IF MAILED IN THE
UNITED STATES

BUSINESS REPLY MAIL

FIRST-CLASS MAIL PERMIT NO. 40 ARMONK, NEW YORK

POSTAGE WILL BE PAID BY ADDRESSEE

IBM Corporation
Department 55JA, Mail Station P384
2455 South Road
Poughkeepsie NY 12601-5400

Fold and Tape | **Please do not staple** | Fold and Tape

GA22-7441-05

Cut or Fold
Along Line

Part Number: 44P1158

Printed in U.S.A.

(1P) P/N: 44P1158

GA22-7441-05