Supplement to the
RS/6000 7043 43P Series

Service Guide and User's Guide

Note to Printer.

1. Cover to be self cover, no graphics.
2. Book trim size to be 7 3/8" x 9" (saddle stitched).
3. Discard this page and the following blank page.

SN32-9080-00

Supplement to the
RS/6000 7043 43P Series

Service Guide and User's Guide

SN32-9080-00

Note

Before using this information and the product it supports, be sure to read the general information under "Product Warranties and Notices" included with your system unit.

First Edition (May 2000)

The following paragraph does not apply to the United Kingdom or any country where such provisions are inconsistent with local law: THIS PUBLICATION IS PROVIDED “AS IS” WITHOUT WARRANTY OF ANY KIND, EITHER EXPRESS OR IMPLIED, INCLUDING, BUT NOT LIMITED TO, THE IMPLIED WARRANTIES OF MERCHANTABILITY OR FITNESS FOR A PARTICULAR PURPOSE. Some states do not allow disclaimer of express or implied warranties in certain transactions, therefore, this statement may not apply to you.

This publication could include technical inaccuracies or typographical errors. Changes are periodically made to the information herein; these changes will be incorporated in new editions of the publication. The manufacturer may make improvements and/or changes in the product(s) and/or the program(s) described in this publication at any time, without notice.

It is possible that this publication may contain reference to, or information about, products (machines and programs), programming, or services that are not announced in your country. Such references or information must not be construed to mean that these products, programming, or services will be announced in your country. Any reference to a specific licensed program in this publication is not intended to state or imply that you can use only that licensed program. You can use any functionally equivalent program instead.

Requests for technical information about products should be made to your authorized reseller or marketing representative.

© **International Business Machines Corporation May, 2000. All rights reserved.**
Note to U.S. Government Users -- Documentation related to restricted rights -- Use, duplication or disclosure is subject to restrictions set forth is GSA ADP Schedule Contract with IBM Corp.

Contents

About This Book v
ISO 9000 v
Trademarks v
Model 150 System Features 1
Setting the SCSI Security Jumpers 3
System Board Locations (for Model 150) 4
System Board, Cables, and Accessories 6

About This Book

This supplement provides updates to:

- *RS/6000 7043 43P Series User's Guide*, SA38-0511
- *RS/6000 7043 43P Series Service Guide*, SA38-0512

ISO 9000

ISO 9000 registered quality systems were used in the development and manufacturing of this product.

Trademarks

AIX is a registered trademark of International Business Machines corporation.

System Features

This supplement contains information specific to the 250MHz option for the Model 150. All other information is consistent with the system books.

Model 150 System Features

Bus Architecture

Five 32-bit PCI adapter slots are available:

- Slots 2 and 3, primary
- Slots 1, 4, and 5, secondary

Microprocessor

- PowerPC 604e 250 MHz with 1MB parity synchronous L2 cache
- PowerPC 604e 375 MHz with 1MB parity synchronous L2 cache

Memory

- 64MB-1GB
- 4 memory module sockets for 64MB, 128MB, or 256MB dual inline memory-module kit with ECC SDRAM EDO (extended data out)

Diskette Drive

- Standard: 3.5-inch, 1.44MB

Drives

Hard Disk Drives

- 4.5GB, 9.1GB, and 18.2GB Ultra SCSI drives
- Maximum supported: 3 internal

CD-ROM drive

- 32x speed 5.25-inch, with sliding tray (no caddy required)

Other Drives

- Drive bays can accommodate 5.25-inch or 3.5-inch drives such as hard disk drives, CD-ROM drives, tape drives or other removable media drives.

Power Supply

- Autoranging 250 watt, usable with 115 V ac or 230 V ac (Supports Wakeup–on–LAN)

Keyboard and Mouse

- Standard: 101 key Enhanced keyboard
- Optional: 101/102 or 106 Enhanced Keyboard
- Standard: 3-button mouse

Front-Panel Display

- 4-digit LED diagnostics display

Input/Output Ports

- 25-pin Parallel
- 9-pin Serial (2)
- 8-pin Tablet
- Keyboard
- Mouse
- Ultra SCSI (16-bit)
- 100/10 Base 5 Ethernet
- 100/10 Base T Ethernet
- Audio Line-in and Audio Line-out
- Microphone
- Headphone

Security Features

- Cover lock
- Tie-down (optional)
- Power-on password
- Privileged-access password
- SCSI security jumpers on system board

Setting the SCSI Security Jumpers

Before you begin:

Carefully read and follow the safety guidelines detailed in this same section of the *RS/6000 7043 43P Series User's Guide*, SA38-0511.

To increase system unit security, the external SCSI connector can be disabled by changing jumpers inside the system unit.

1. Locate the SCSI security jumpers in the following figure.

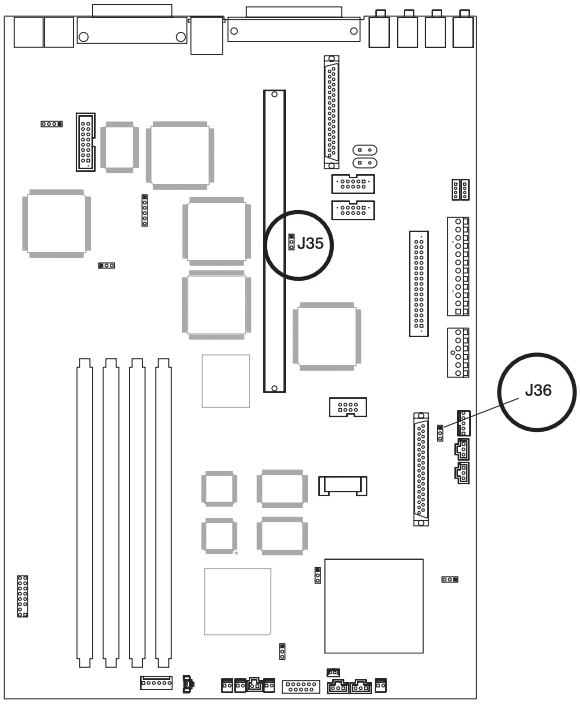

2. To disable the external SCSI connector, move the jumper on J35 to the front two pins, and move the jumper on J36 to the rear two pins.

System Board Locations (for Model 150)

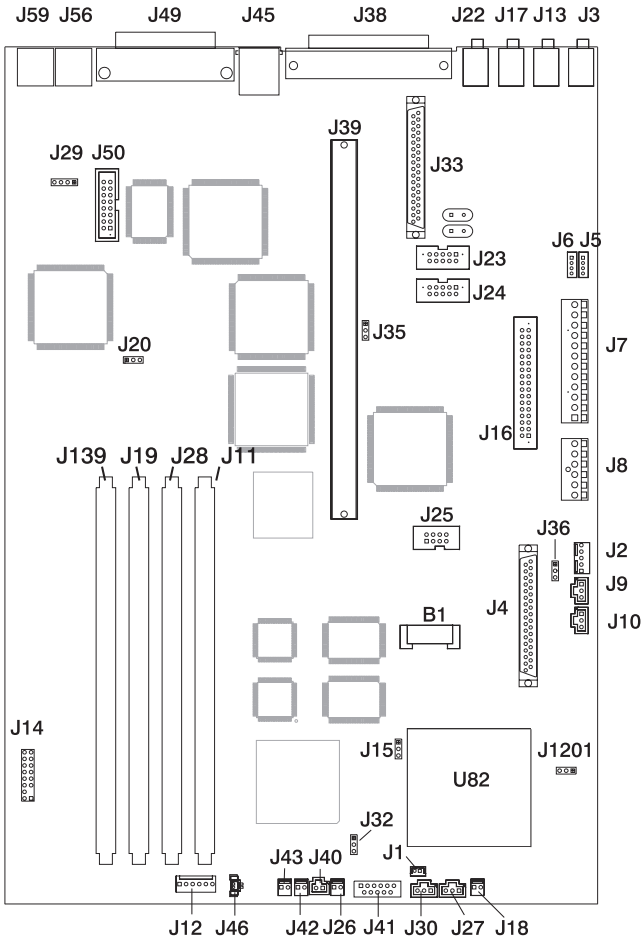

B1 Battery connector

J1 Wakeup-on-LAN jumper

J2 5x5 Auxiliary 5v connector

J3 Audio input connector

J4 Internal SCSI connector #2

J5 CD-ROM audio connector

J6 CD-ROM audio connector

J7 Power connector

J8 Power connector

J10 Media Fan connector

J11 Memory Connector 1

J13 Audio output connector

J15 Remote Power-up Jumper

J16 Diskette drive connector

J17 Microphone jack

J18 Reset Connector

J19 Memory Connector 3

J20 Power-on Password jumper

J22 Headphone jack

J23 Serial port connector 2

J24 Serial port connector 1

J25 Tablet port connector

J26 CPU fansink connector

J27 System fan connector

J28 Memory Connector 2

J30 System fan connector

J32 Privileged-Access Password jumper

J33 Internal SCSI 16-bit connector

J35 SCSI security jumper

J36 SCSI security jumper

J38 External SCSI connector

J39 Riser card connector

J40 Power Switch connector

J41 Op Panel Connector

J42 Power Indicator LED connector

J43 Hard disk activity LED connector

J45 Ethernet twisted pair connector

J46 Internal Speaker connector

J49 Parallel port connector

J50 Ethernet AUI

J56 Mouse port connector

J59 Keyboard port connector

J139 Memory Connector 4

System Board, Cables, and Accessories

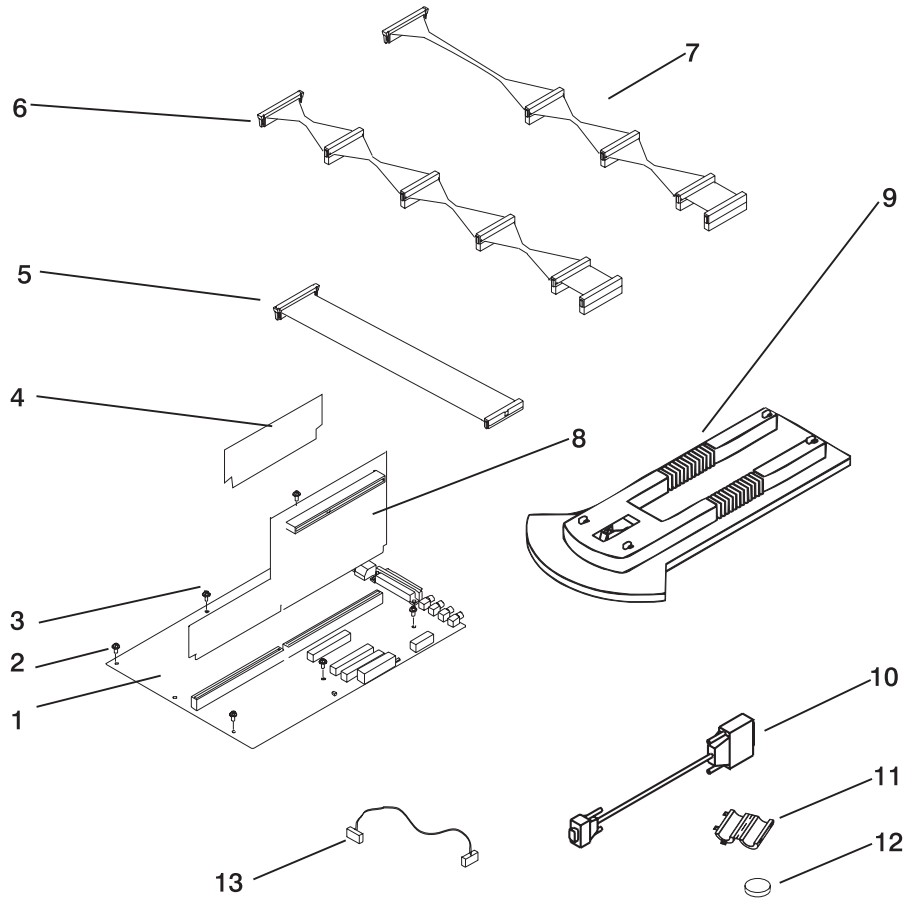

Index Number	FRU Number	Units Per Assy	Description
1	09P0168	1	System Board (250 MHz)
2	27F4212	6	Screw
3	39H8697	1	Hex Standoff
4	19L1808	1-4	64MB DIMM
	19L1809	1-4	128MB DIMM
	29L3302	1-4	256MB DIMM
5	93H1821	1	Diskette Cable Assembly
6	40H7572	1	SCSI Cable Assembly
7	93H6151	1	Ultra SCSI Cable Assembly (Optional)
8	08L1417	1	Riser Card
9	07L9115	1	Vertical Stand
10	40H6328	2	9-pin to 25-pin Serial Port Converters
11	11H2168	1	Display Cable Toroid Kit
12	15F8409	1	Battery
13	65G8850	1	CD-ROM drive audio cable

Part Number: 00P2196

Printed in the United States of America
on recycled paper containing 10%
recovered post-consumer fiber.

00P2196

SN32-9080-00