SG24-4592-00

International Technical Support Organization

The IBM Personal Computer and ThinkPad Power Series

January 1996

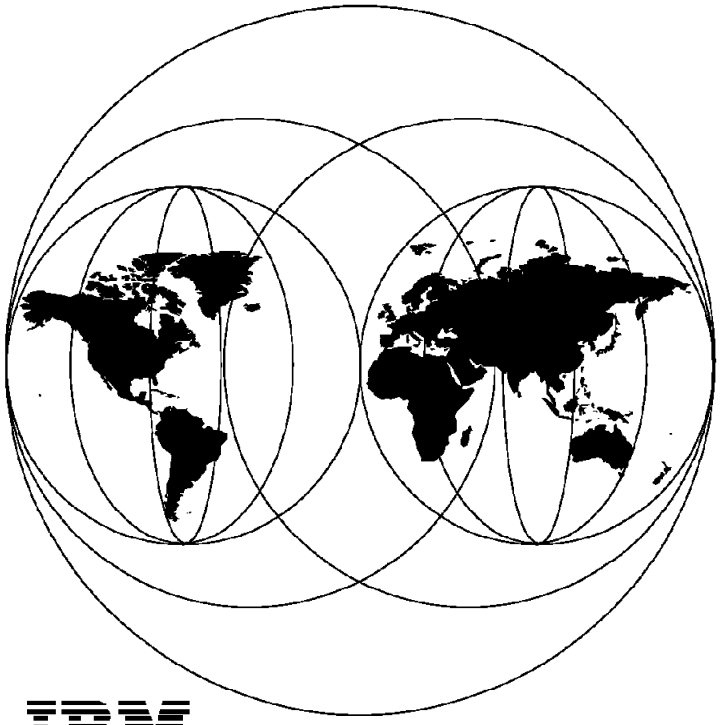

IBM
International Technical Support Organization
Boca Raton Center

SG24-4592-00

International Technical Support Organization

The IBM Personal Computer and ThinkPad Power Series

January 1996

Take Note!

Before using this information and the product it supports, be sure to read the general information under “Special Notices” on page xiii.

First Edition (January 1996)

This edition applies to the IBM Power Series hardware and software products currently announced at the date of publication.

Order publications through your IBM representative or the IBM branch office serving your locality. Publications are not stocked at the address given below.

An ITSO Technical Bulletin Evaluation Form for reader’s feedback appears facing Chapter 1. If the form has been removed, comments may be addressed to:

IBM Corporation, International Technical Support Organization
Dept. JLPC Building 014 Internal Zip 5220
1000 NW 51st Street
Boca Raton, Florida 33431-1328

When you send information to IBM, you grant IBM a non-exclusive right to use or distribute the information in any way it believes appropriate without incurring any obligation to you.

© **Copyright International Business Machines Corporation 1996. All rights reserved.**
Note to U.S. Government Users — Documentation related to restricted rights — Use, duplication or disclosure is subject to restrictions set forth in GSA ADP Schedule Contract with IBM Corp.

Abstract

This document provides detailed information about the new IBM Personal Computer and ThinkPad Power Series systems as well as an introduction to the underlaying PowerPC architecture on which these systems are based. It provides details on the functionality as well as on the architecture of the systems.

This document was written for all those who are interested in IBM's first Personal Computers based on PowerPC technology.

(195 pages)

© Copyright IBM Corp. 1996

Contents

Abstract iii

Figures ix

Tables xi

Special Notices xiii

Preface xvii
How This Document Is Organized xvii
Related Publications xviii
International Technical Support Organization Publications xix
ITSO Redbooks on the World Wide Web (WWW) xix
Acknowledgments xx

Chapter 1. PowerPC Introduction 1
1.1 PowerPC Architecture Design Aims 1
1.2 Layers of the PowerPC Architecture 1
1.2.1 User Instruction Set 2
1.2.2 Virtual Environment 2
1.2.3 Operating Environment 3
1.2.4 Chip Implementation 3
1.3 The Basic Processor Model 3
1.4 General Architecture Concepts 4
1.4.1 Pipelining and Superscalar Architecture 4
1.5 The PowerPC Processor Family 7
1.5.1 The PowerPC 601 Processor 8
1.5.2 The PowerPC 603 and 603e Processors 9
1.5.3 The PowerPC 604 Processor 9
1.5.4 The PowerPC 620 Processor 10
1.5.5 PowerPC Processor Features 10

Chapter 2. IBM Personal Computer and ThinkPad Power Series 13
2.1 Overview 13
2.2 IBM Personal Computer Power Series 14
2.2.1 Technical Details 15
2.2.2 Product Positioning 18
2.3 The IBM ThinkPad Power Series 18
2.3.1 The IBM Personal Computer ThinkPad 820 19
2.3.2 Product Positioning 20

© Copyright IBM Corp. 1996

2.3.3 The IBM Personal Computer ThinkPad 850 21
2.3.4 Product Positioning 23
2.4 Technical Details 23
2.4.1 Power Series Systems Matrix 23
2.4.2 Video Support 24
2.4.3 System Status Indicators 31
2.4.4 Audio Support 33
2.5 Operating Systems and Applications 36
2.5.1 Windows NT 37
2.5.2 IBM AIX (UNIX) 39
2.5.3 Demo Applications 39

Chapter 3. The IBM Power Series System Architecture 41
3.1 IBM Personal Computer and ThinkPad Power Series System Boards 45
3.1.1 The IBM Personal Computer Power Series System Boards . . . 45
3.1.2 IBM ThinkPad Power Series System Board 52
3.2 Bus Architecture 57
3.2.1 Bus History 59
3.2.2 The Industry Standard Architecture Bus 59
3.2.3 Local Bus Architecture 60
3.2.4 Bus Comparison 68
3.2.5 IBM PC Power Series Bus Implementation 69
3.3 Memory Subsystem 75
3.3.1 Personal Computer Power Series System 830 and 850 75
3.3.2 ThinkPad Power Series 820 and 850 Systems 77
3.4 Disk Subsystems 79
3.4.1 Disk Subsystem Topology 79
3.4.2 Seagate Technology ST506 82
3.4.3 Enhanced Small Device Interface 83
3.4.4 Integrated Drive Electronics (IDE and E-IDE) 83
3.4.5 Small Computer Systems Interface (SCSI) 88
3.4.6 Personal Computer and ThinkPad Power Series Disk Subsystems 94
3.5 CD-ROM Drives 96
3.5.1 Personal Computer Power Series 830 and 850 Systems 96
3.5.2 Power Series ThinkPad 820 and 850 96
3.5.3 Available CD-ROM Drives for the Power Series Systems 100
3.6 Video Subsystem 101
3.6.1 Video Subsystem for the PC Power Series 101
3.6.2 Video Subsystem for ThinkPad Power Series 102
3.7 Input/Output Subsystem 105
3.7.1 Personal Computer Power Series 830 and 850 105
3.7.2 ThinkPad Power Series System 820 and 850 106
3.8 Firmware 110

3.8.1 Structure of Firmware 111
3.8.2 Operation 112
3.8.3 Initial Program Load 114
3.8.4 Boot Record 115
3.9 Power Management Subsystem 118
3.10 Security 126
3.10.1 Passwords 126
3.10.2 Locking Features 128
3.11 Easy Setup and System Management Services 129
3.11.1 Extended System Management Services 132
3.11.2 Network-Based System Management 132

Appendix A. System Details by Model Type 133
A.1 US Systems Details 133
A.2 European (EMEA) Systems Details 135
A.3 Japanese Systems Details 137

Appendix B. POST and Diagnostic Error Codes 139
B.1 POST Error Codes for ThinkPad Power Series Systems 139
B.2 Diagnostic Error Codes for ThinkPad Power Series Systems 141
B.3 Error Codes for Personal Computer Power Series Systems 144
B.4 SCSI Device FRU Code Information for Personal Computer Power Series Systems 150

Appendix C. Power Specifications 153
C.1 Power Specifications for the Personal Computer Power Series Systems 153
C.1.1 Personal Computer Power Series 830 Power Supply Ratings . . 154
C.1.2 Personal Computer Power Series 850 Power Supply Ratings . . 155
C.1.3 Personal Computer Power Series Adapter Slot Power Allocation 155
C.2 Power Specifications For the ThinkPad Power Series Systems . . . 156

Appendix D. Adapters and Features 157
D.1 Adapters and Features for US Systems 157
D.2 Adapters and Features for Japanese Systems 160

Appendix E. IRQ and DMA-Channel Assignments 165
E.1 IRQ Assignments for the IBM Personal Computer Power Series Systems 165
E.2 DMA-Channel Assignments for the IBM Personal Computer Power Series Systems 166
E.3 System Registers for the IBM Personal Computer Power Series Systems 167

Appendix F. Connector Layout and Pin Assignments 169
F.1 Keyboard Connector 169
F.2 Mouse Connector 170
F.3 Serial Port Connector 170
F.4 Parallel Port Connector 171
F.5 Video Connector 173
F.6 PCI Connector 173
F.7 ISA Connector 176

Glossary 179

List of Abbreviations 187

Index 191

Figures

1. The PowerPC Architecture Layers 2
2. Basic Processor Model 3
3. Instruction Execution Process (No-Pipelining) 5
4. The Basic Pipelining Process 6
5. Pipelining with Superscalar Instruction Dispatch 7
6. The PowerPC Processor Family Roadmap 8
7. The IBM Power Series Boot Logo 14
8. The IBM Personal Computer Power Series 830 and 850 17
9. The IBM ThinkPad Power Series 820 and 850 with Mounted Video Camera 21
10. Status LED Indicator for ThinkPad Power Series 850 and 820 31
11. Hardware Block Diagram of the Personal Computer Power Series Systems 42
12. Hardware Block Diagram of the ThinkPad Power Series 820 System 44
13. System Board of the Personal Computer Power Series 830 and 850 46
14. System Board Block Diagram of the IBM ThinkPad Power Series 850 52
15. Standard PowerPC Reference Platform Specification Bus Topology 58
16. Traditional Bus Architecture 60
17. Local Bus Architecture 61
18. Typical PCI Local Bus Architecture 63
19. PCMCIA Components 65
20. Power Series ThinkPad 820 Memory Subsystem Block Diagram . . 78
21. Disk Subsystem Topology 80
22. Device Level Interface 81
23. Bus Level Interface 82
24. IDE Overview 84
25. E-IDE Overview 86
26. SCSI Interface Overview 89
27. SCSI Device Addressing 90
28. SCSI Cable with Five Drops 92
29. CD-ROM Drive SCSI ID Jumper Location for the ThinkPad Power Series System 820 97
30. CD-ROM Drive SCSI ID Jumper Location for ThinkPad Power Series System 850 98
31. Auxiliary User Input Device Block Diagram 109
32. Power Management Control Register 0 110
33. High-Level Block Diagram for the Firmware 112
34. General Flow of the Firmware Operation for the Personal Computer and ThinkPad Power Series 113
35. Boot Process Overview of the Power Series 115

© Copyright IBM Corp. 1996

36. Boot Record for the Personal Computer and ThinkPad Power Series Systems 116
37. Power Management Mode State Transitions for Personal Computer Power Series Systems 119
38. Power Management Mode State Transitions for ThinkPad Power Series Systems 123
39. The Easy Setup Screen of an IBM Personal Computer ThinkPad . 131
40. Layout of the Keyboard Connector 169
41. Layout of the Mouse Port 170
42. Layout of the Serial Port Connector 171
43. Layout of the Parallel Port Connector 172
44. Layout of the Video Port Connector 173
45. Layout of the PCI connector 174
46. Layout of the ISA Connector 176

Tables

1. Processor Features 10
2. PC Power Series Overview 23
3. Color TFT Display Specifications 25
4. The Motion Video Adapter 25
5. System Status Indicator for ThinkPad Power Series 850/820 31
6. L2 Cache on ThinkPad Power Series 53
7. Bus Comparison 68
8. Personal Computer Power Series Bus Specifications 71
9. ThinkPad Power Series Bus Specifications 74
10. IDE I/O Addressing 87
11. SCSI Cables 93
12. Different SCSI Modes 93
13. ATA Modes 94
14. Available Harddisks for the Power Series 830 and 850 95
15. Available Harddisks for the ThinkPad 820 and 850 95
16. ID Jumpers for the CD-ROM Drive 98
17. CD-ROM Functional Jumpers 99
18. CD-ROM Drive Specifications 100
19. S3 864 Video Mode 101
20. Video Modes 103
21. Power Management 124
22. Easy Setup and System Management Overview 131
23. US Systems by Model Type 133
24. European Systems by Model Type 135
25. Japanese Systems by Model Type 137
26. POST Error Codes 140
27. Diagnostic Error Codes 141
28. Error Codes 144
29. SCSI Device FRU 150
30. Power Supply Input Voltage Range for the Personal Computer Power Series 154
31. 100 Watts Power Supply Output 154
32. 200 Watts Power Supply Output 155
33. Personal Computer Power Series Adapter-Slot Power Allocation . 155
34. Options and Features Supported in the Personal Computer Power Series (US) 157
35. Options and Features for the ThinkPad Power Series (US) 159
36. Options and Features Supported in the Personal Computer Power Series (Japan) 160

© Copyright IBM Corp. 1996

37. Options and Features Supported in the ThinkPad Power Series (Japan) 162
38. IRQ Assignments 165
39. DMA-Channel Assignment 166
40. System Registers 167
41. Keyboard Connector Pin Assignments 169
42. Mouse Connector Pin Assignment 170
43. Serial Port Connector Pin Assignments 171
44. Parallel Port Connector Pin Assignments 172
45. Video Port Connector Pin Assignments 173
46. PCI Connector Pin Assignments 174
47. ISA Connector Pin Assignments 176

Special Notices

This publication is intended to help IBM customers, dealers, system engineers and consultants to understand the first IBM Personal Computer and ThinkPad systems based on PowerPC technology. The information in this publication is not intended as the specification of any programming interfaces that are provided by OS/2, OS/2 LAN Server, NetWare, Windows NT or any other products mentioned in this publication. See the PUBLICATIONS section of the IBM Programming Announcement for these products for more information about what publications are considered to be product documentation.

References in this publication to IBM products, programs or services do not imply that IBM intends to make these available in all countries in which IBM operates. Any reference to an IBM product, program, or service is not intended to state or imply that only IBM′s product, program, or service may be used. Any functionally equivalent program that does not infringe any of IBM′s intellectual property rights may be used instead of the IBM product, program or service.

Information in this book was developed in conjunction with use of the equipment specified, and is limited in application to those specific hardware and software products and levels.

IBM may have patents or pending patent applications covering subject matter in this document. The furnishing of this document does not give you any license to these patents. You can send license inquiries, in writing, to the IBM Director of Licensing, IBM Corporation, 500 Columbus Avenue, Thornwood, NY 10594 USA.

The information contained in this document has not been submitted to any formal IBM test and is distributed AS IS. The information about non-IBM (VENDOR) products in this manual has been supplied by the vendor and IBM assumes no responsibility for its accuracy or completeness. The use of this information or the implementation of any of these techniques is a customer responsibility and depends on the customer′s ability to evaluate and integrate them into the customer′s operational environment. While each item may have been reviewed by IBM for accuracy in a specific situation, there is no guarantee that the same or similar results will be obtained elsewhere. Customers attempting to adapt these techniques to their own environments do so at their own risk.

© Copyright IBM Corp. 1996

Any performance data contained in this document was determined in a controlled environment, and therefore, the results that may be obtained in other operating environments may vary significantly. Users of this document should verify the applicable data for their specific environment.

The following document contains examples of data and reports used in daily business operations. To illustrate them as completely as possible, the examples contain the names of individuals, companies, brands, and products. All of these names are fictitious and any similarity to the names and addresses used by an actual business enterprise is entirely coincidental.

Reference to PTF numbers that have not been released through the normal distribution process does not imply general availability. The purpose of including these reference numbers is to alert IBM customers to specific information relative to the implementation of the PTF when it becomes available to each customer according to the normal IBM PTF distribution process.

The following terms are trademarks of the International Business Machines Corporation in the United States and/or other countries:

AIX
Micro Channel
OS/2
POWER Architecture
Power Series 800
Power Series 830
PowerOpen
PowerPC Architecture
PowerPC 601
PowerPC 603e
POWER2 Architecture
RISC System/6000
RT PC
RT
System/360
TrackPoint II
Workplace Shell
IBM
Operating System/2
Personal System/2
Power Series
Power Series 820
Power Series 850
PowerPC
PowerPC Reference Platform
PowerPC 603
PowerPC 604
PS/2
RS/6000
RT Personal Computer
S/370
ThinkPad
TrackPoint

The following terms are trademarks of other companies:

C-bus is a trademark of Corollary, Inc.

PC Direct is a trademark of Ziff Communications Company and is used by IBM Corporation under license.

UNIX is a registered trademark in the United States and other countries licensed exclusively through X/Open Company Limited.

Windows is a trademark of Microsoft Corporation.

Other trademarks are trademarks of their respective companies.

C++ is a trademark of American Telephone and Telegraph Company, Incorporated
Canon is a trademark of Canon Kabushiki Kaisha
C-bus is a trademark of Corollary, Inc.
Centronics is a trademark of Centronics Data Computer Corporation
DeskSet, Solaris, Sun, Sun Microsystems, SonOS, SunSoft and Wabi are trademarks of Sun Microsystems, Incorporated
Direct Access is a trademark of Fifth Generation Systems, Incorporated
Framework is a trademark of Ashton-Tate, Incorporated
Hewlett-Packard and HP are trademarks of Hewlett-Packard Company
Intel,Pentium, and 486 are trademarks of Intel Corporation
Kodak is a trademark of Eastman Kodak Company
Lotus is a trademark of Lotus Development Corporation
Microsoft, Windows, MS, MS-DOS, Windows NT, and Win32 are trademarks of Microsoft Corporation
Motorola is a trademark of Motorola, Incorporated
PC Direct is a trademark of Ziff Communications Company and is used by IBM Corporation under license.
S3 is a trademark of S3 Incorporated
UNIX is a registered trademark in the United States and other countries licensed exclusively through X/Open Company Limited.
UNIX System V is a trademark of AT&T Bell Laboratories Incorporated
VESA is a trademark of Video Electronics Standards Association
VL-Bus is a trademark of Video Electronics Standards Association
Western Digital is a trademark of Western Digital Corporation

Preface

This document is intended to provide an technical overview on the IBM Personal Computer Power Series and the IBM ThinkPad Power Series. It describes the specifications as well as the architecture of both product lines.

This document is intended to help IBM customers, dealers, system engineers, and consultants to understand the first IBM Personal Computer and ThinkPad products based on PowerPC technology.

How This Document Is Organized

The document is organized as follows:

- Chapter 1, “PowerPC Introduction”

  The first chapter provides an introduction to the PowerPC architecture and an overview of the available PowerPC processors.

- Chapter 2, “IBM Personal Computer and ThinkPad Power Series”

  This chapter describes the available line of Personal Computers and ThinkPads based on the PowerPC microprocessor, the IBM Personal Computer and ThinkPad Power Series.

- Chapter 3, “The IBM Power Series System Architecture”

  This chapter describes the IBM Personal Computer and ThinkPad Power Series system architecture.

- Appendix A, “System Details by Model Type”

  This appendix lists the available IBM Personal Computer and ThinkPad Power Series systems by model type.

- Appendix B, “POST and Diagnostic Error Codes”

  This appendix lists the diagnostic and error codes for the IBM Personal Computer and ThinkPad Power Series systems.

- Appendix C, “Power Specifications”

  This appendix lists the power requirements for the IBM Personal Computer and ThinkPad Power Series systems.

- Appendix D, “Adapters and Features”

  This appendix lists adapters and features for the IBM Personal Computer and ThinkPad Power Series systems.

© Copyright IBM Corp. 1996

- Appendix E, “IRQ and DMA-Channel Assignments”

  This appendix lists the IRQ and DMA assignments for the IBM Personal Computer and ThinkPad Power Series systems.

- Appendix F, “Connector Layout and Pin Assignments”

  This appendix lists the connector layout and pin assignments for the IBM Personal Computer and ThinkPad Power Series systems.

Related Publications

The publications listed in this section are considered particularly suitable for a more detailed discussion of the topics covered in this document.

- *PowerPC - Reference Platform Specification V1.0*, IBM, INC.
- *PowerPC 603/604 Reference Design Technical Specification Release 2.0*, IBM, INC., Document No: MPRH01TSU-01
- *The PowerPC Architecture: A Specification For a New Family of RISC Processors*, IBM, INC. PN SR28-5124-01
- *Insider's Guide to PowerPC Computing: Behind the Scenes of the New PowerPC System Architecture*, Jerry L.Young, Que Corp, ISBN: 1-56529-625-7
- *PowerPC - Concepts, Architecture, and Design*, Dipto Chakravarty & Casey Cannon, McGraw-Hill, Inc. ISBN 0-07-011192-8, IBM PN SR28-5599-00
- *PowerPC and POWER2 - Technical Aspects of the New IBM RISC System/6000*, IBM, INC. PN SA23-2737-00
- *PowerPC - A Practical Companion*, Steve Heath, Butterworth-Heinemann, ISBN 0-7506-1801-9
- *Interfacing to the PowerPC Microprocessor*, Ron and Dan Rahmel SAMS Publishing, ISBN 0-672-30548-8
- *Exploring the PowerPC Revolution*, Jim Hoskins and Jack Blackledge, Maximum Press, ISBN 1-885068-02-6, IBM PN S246-0099-00
- *PowerPC 601 RISC Microprocessor User's Manual*, IBM Microelectronics PN 52G7484.
- *PowerPC 603 RISC Microprocessor User's Manual*, IBM Microelectronics PN MPR603UMU-01
- *PowerPC Microprocessor Hardware Reference Platform*, Morgan Kaufmann Publisher, ISBN 1-55860-394-8

- *PowerPC: An Internal View*, Michael Koerner Prentice Hall, ISBN 0-13-255753-3

International Technical Support Organization Publications

A complete list of International Technical Support Organization publications, known as redbooks, with a brief description of each, may be found in:

International Technical Support Organization Bibliography of Redbooks, GG24-3070.

To get a catalog of ITSO redbooks, VNET users may type:

```
TOOLS SENDTO WTSCPOK TOOLS REDBOOKS GET REDBOOKS CATALOG
```

A listing of all redbooks, sorted by category, may also be found on MKTTOOLS as ITSOCAT TXT. This package is updated monthly.

How to Order ITSO Redbooks

IBM employees in the USA may order ITSO books and CD-ROMs using PUBORDER. Customers in the USA may order by calling 1-800-879-2755 or by faxing 1-800-445-9269. Most major credit cards are accepted. Outside the USA, customers should contact their local IBM office. Guidance may be obtained by sending a PROFS note to BOOKSHOP at DKIBMVM1 or E-mail to bookshop@dk.ibm.com.

Customers may order hardcopy ITSO books individually or in customized sets, called BOFs, which relate to specific functions of interest. IBM employees and customers may also order ITSO books in online format on CD-ROM collections, which contain redbooks on a variety of products.

ITSO Redbooks on the World Wide Web (WWW)

Internet users may find information about redbooks on the ITSO World Wide Web home page. To access the ITSO Web pages, point your Web browser to the following URL:

```
http://www.redbooks.ibm.com/redbooks
```

IBM employees may access LIST3820s of redbooks as well. The internal redbooks may be found at the following URL:

```
http://w3.itsc.pok.ibm.com/redbooks/redbooks.html
```

Acknowledgments

This project was designed and managed by:

Michael Koerner
International Technical Support Organization, Boca Raton Center

The authors of this document are:

Michael Koerner
International Technical Support Organization, Boca Raton Center

Jacques Janse van Rensburg
IBM South Africa

Tetsuro Tada
IBM Japan

Andre Widmer
IBM Switzerland

Jürgen Sauter
IBM Germany

This publication is the result of a residency conducted at the International Technical Support Organization, Boca Raton Center.

Thanks to the following people for the invaluable advice and guidance provided in the production of this document:

Ricardo Aranda
IBM Austin

Carmen Myers
IBM Raleigh

Chapter 1. PowerPC Introduction

This book describes the first IBM personal computers based on the PowerPC technology, the IBM PC Power Series and the IBM ThinkPad Power Series.

The PowerPC microprocessor is a Reduced Instruction Set Computer (RISC) processor which has evolved from IBM's Performance Optimization With Enhanced RISC (POWER) architecture.

1.1 PowerPC Architecture Design Aims

The PowerPC processor designers had several aims when developing the architecture explained in this section. The successful implementation of these aims provide us with the following PowerPC architecture features:

- **Support for 32-bit and 64-bit instructions:** The architecture supports upward compatibility for 32-bit instructions and complies with future 64-bit instruction sets.
- **Binary compatibility:** The architecture is compatible with binary applications implemented by the POWER architecture. This means that the instruction set and programming models are similar to those used by the RISC/6000 applications.
- **Support for uniprocessor and multiprocessor systems:** The architecture provides support for single and multi-processor systems. The storage control subsystem is designed to support multiprocessing.
- **Flexibility:** The architecture allows for flexibility in order to utilize the processor in many different environments and target markets. A platform was created for various implementations, from laptop systems to high-end servers.

1.2 Layers of the PowerPC Architecture

The PowerPC architecture consists of four layers. The following section illustrates and defines these layers to emphasize the varying degrees of compatibility from an application perspective.

© Copyright IBM Corp. 1996

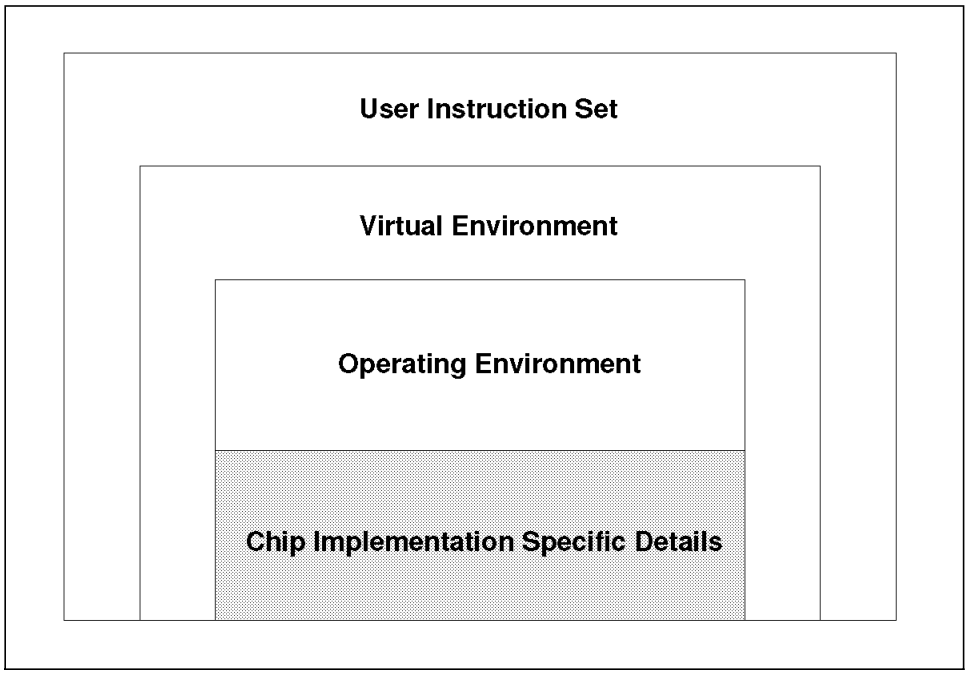

Figure 1. The PowerPC Architecture Layers

Figure 1 shows the different layers of the PowerPC architecture as it is implemented from an application point of view.

1.2.1 User Instruction Set

The PowerPC instruction set architecture defines the base user-level instruction set, registers, memory models, floating-point exception model and data types for a single processor environment. This layer is common to all PowerPC processors.

1.2.2 Virtual Environment

The PowerPC virtual environment architecture describes the cache model and the virtual storage model. It also describes the shared storage model for a multi-processor environment. This layer is common to all PowerPC processors. Implementations that conform to the virtual environment specification also adhere to the user instruction set architecture, but not necessarily to the operating environment architecture.

1.2.3 Operating Environment

The PowerPC operating environment architecture defines the supervisor-level registers (privileged facilities not available to the application developer), synchronization requirements, memory management model and the exception model. Implementations that conform to the operating environment architecture also adhere to the user instruction set architecture and the virtual environment specification.

1.2.4 Chip Implementation

Beneath the operating environment architecture is the PowerPC architecture that is unique to individual processors, therefore the implementation details are not described in the general definition of the PowerPC architecture.

1.3 The Basic Processor Model

Figure 2 explains the basic internal processor operations of the PowerPC microprocessor.

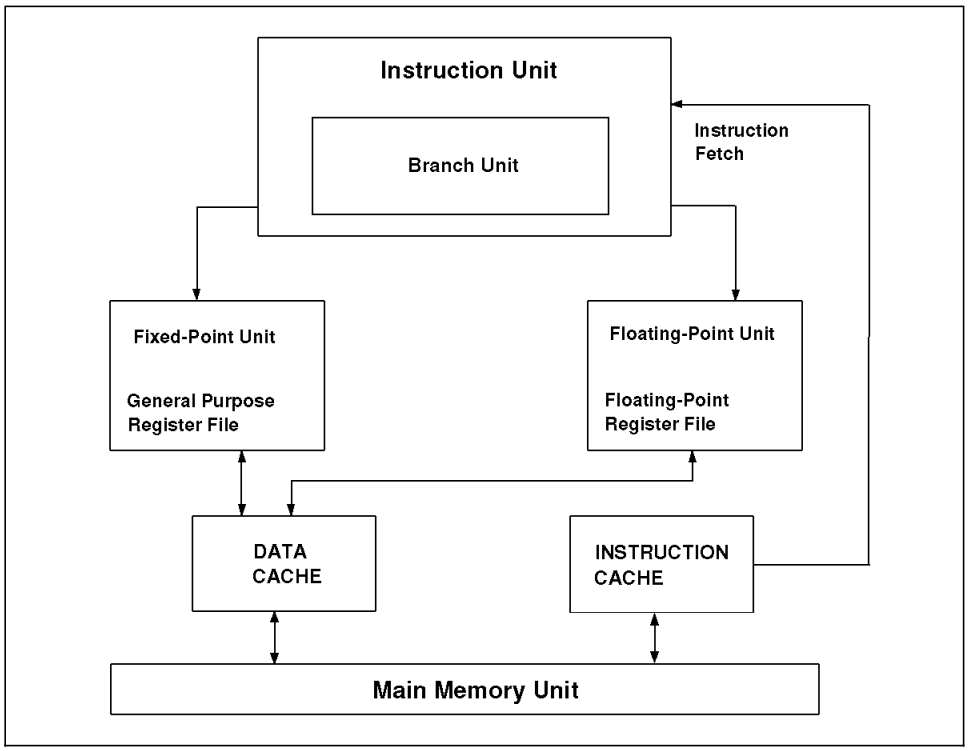

Figure 2. Basic Processor Model

The processor model shows three major units which can execute instructions simultaneously. The following are:

- **The Branch Unit:** Securely connected to the instruction unit in order to provide for branch look-ahead facilities to help achieve zero-cycle branching. The architecture also provides branch prediction implementation facilities.
- **The floating-point unit (FPU):** Responsible for processing the floating point instructions. The floating point registers (FPRs) are incorporated in the FPU because they contain the operands for the floating point instructions. The FPRs can, however, be implemented outside the FPU in the case where multiple FPUs are used.
- **The Fixed-Point Unit (FXU):** Responsible for handling the more conventional integer processing operations and address interpretation. The general purpose registers (GPRs) are incorporated in the FXU. The GPRs are used for calculating addresses in the address translation process.

  The model shows the FPU and FXU as interconnected units but they can also be implemented in a very flexible manner. Additional FXUs and FPUs can be used to provide for higher performance in high-end machines. The FPU can also be emulated in software instead of using a hardware unit.

1.4 General Architecture Concepts

The following section will describe some basic concepts of the PowerPC architecture that distinguishes it from other known architectures. Explaining these concepts is of great importance as it will highlight the key features for implementation of the architecture.

1.4.1 Pipelining and Superscalar Architecture

Execution of computing instructions normally requires the following four-stage process:

1. **Instruction Fetch:** Responsible for fetching the instruction from the main memory unit.
2. **Dispatch:** Involves decoding the instruction and getting the operands described in the instruction and providing the information to the execution unit.
3. **Execution:** The actual computation of the instruction.

4. **Store:** Involves storing the result of the execution back into memory.

This process is commonly known as the no-pipelining method. It is important to notice that each of these stages can take up more than one clock cycle to complete. Figure 3 shows the no-pipelining process.

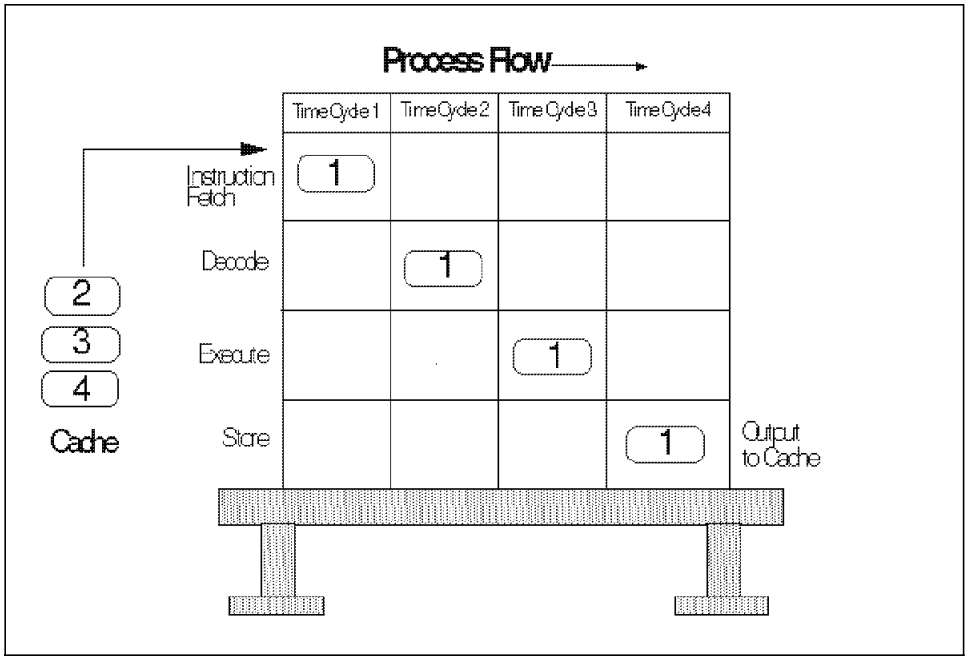

Figure 3. Instruction Execution Process (No-Pipelining)

We can see that this method is not efficient, as three of the stages are idle while one stage is executing. The method can be improved by a process called pipelining. While one stage is busy processing an instruction, the other previously idle stages, can move on to the next instruction in the line. The result is that we can now have a potential output of one instruction per clock cycle. It can be compared to a simple assembly line. Figure 4 on page 6 shows the pipelining method.

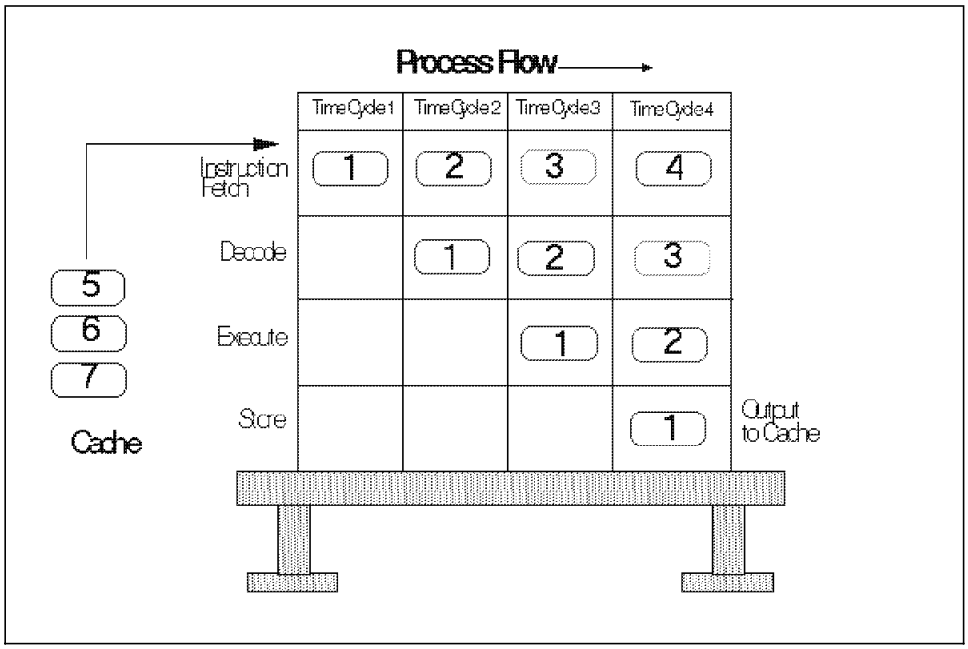

Figure 4. The Basic Pipelining Process

The PowerPC architecture has the ability to improve the performance of pipelining even further with a process called superscalar instruction dispatch. This process enables the system to have multiple execution units. Figure 5 on page 7 shows an example where three instructions are issued every clock cycle. Each of these instructions then goes to one of the three execution units where they are executed in parallel. Such a system then has a potential throughput of more than one instruction per clock cycle.

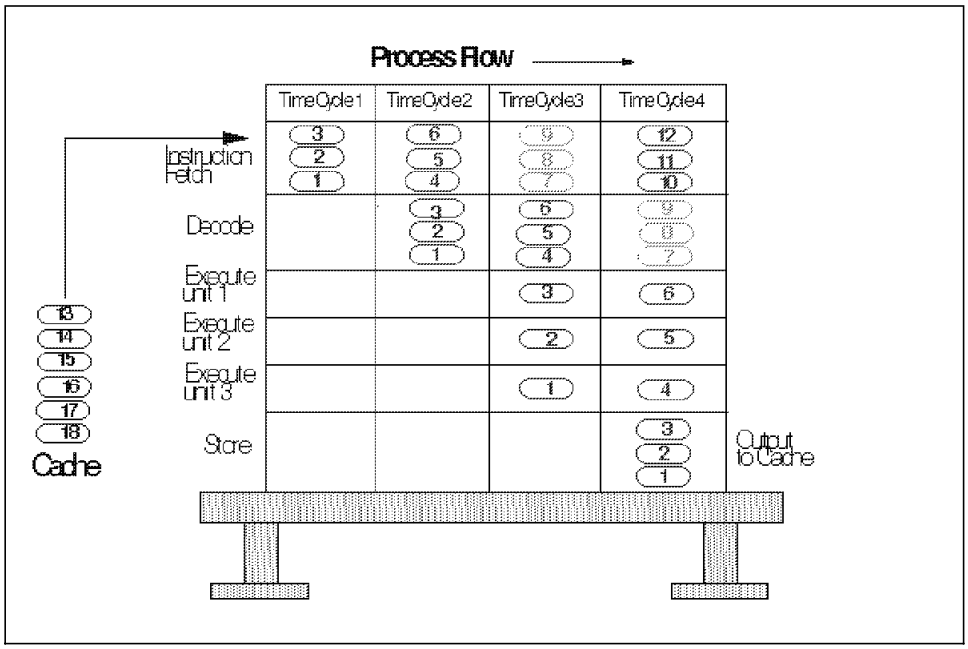

Figure 5. Pipelining with Superscalar Instruction Dispatch

1.5 The PowerPC Processor Family

The PowerPC processor was designed and manufactured to meet the standards set by the IBM, Apple and Motorola alliance. Figure 6 on page 8 shows the processor family in relation to its performance and planned release dates for the future.

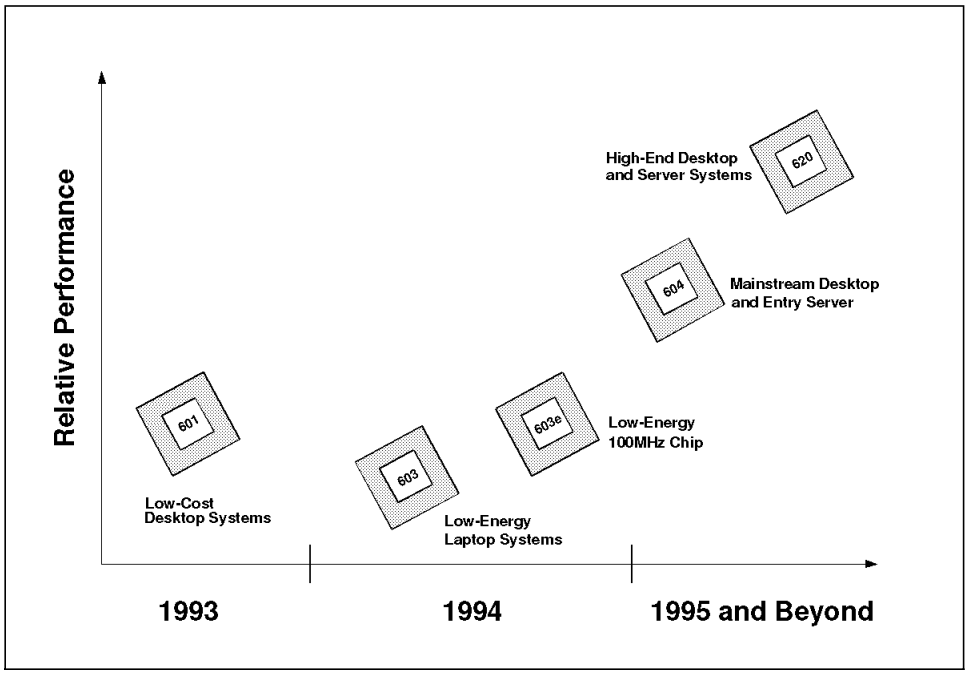

Figure 6. The PowerPC Processor Family Roadmap

1.5.1 The PowerPC 601 Processor

The PowerPC 601 processor is the first member of the PowerPC family. One could say that it was the pioneer processor that brought the PowerPC technology to the marketplace. The PowerPC 601 processor is also called the bridge processor between the POWER and the PowerPC technology. It achieves its performance through concurrent execution of up to three instructions per clock cycle in the following three execution units:

- Branch processing unit
- Fixed-point processing unit
- Floating-point processing unit

The PowerPC 601 processor is available in different clock speeds: 50 MHz, 66 MHz and 100 MHz.

1.5.2 The PowerPC 603 and 603e Processors

The PowerPC 603 and 603e processors are intended for use in notebooks and low-end desktop computers. They achieve their performance through concurrent execution of up to three instructions per clock cycle in the following five execution units:

- Branch processing unit
- Fixed-point processing unit
- Floating-point processing unit
- System unit
- Load/store unit

The PowerPC 603 and 603e processors also offer a wide range of power management features and have a low-power design which makes it ideal for the portable and low-cost machines. The PowerPC 603 processor is available in two different clock speeds: 66 MHz and 80 MHz. The PowerPC 603e processor is designed to run at 100 Mhz.

1.5.3 The PowerPC 604 Processor

The PowerPC 604 processor is designed for use in high performance high-end desktop machines, midrange server systems and high performance graphic workstations. It achieves its performance through concurrent execution of up to four instructions per clock cycle in the following six execution units:

- Three fixed-point units
  - Two single cycle fixed-point units
  - One multiple cycle integer unit
- Branch processing unit
- Load/store processing unit
- Floating-point processing unit

The PowerPC 604 offers the user the ability to easily handle graphic oriented software packages, multimedia applications and software packages driven by floating point operations. There will be no need for expensive add-on hardware as this system has tremendous performance capabilities. The PowerPC 604 processor is available in three different clock speeds: 100 MHz, 120 MHz and 133 MHz.

1.5.4 The PowerPC 620 Processor

The PowerPC 620 processor implements the full 64-bit PowerPC architecture and has a L2 cache controller embedded in the microprocessor that interfaces with the standard SRAM chips. It achieves its performance through concurrent execution of up to four instructions per clock cycle in the following six execution units:

- Three integer units
  - Two single cycle integer units
  - One multiple cycle integer unit
- Branch processing unit
- Load/store processing unit
- Floating-point processing unit

The PowerPC 620 is targeted at the high-end desktop systems, servers and transaction processing-based machines. The PowerPC 620 processor will be available in one model that runs at a clock speed of 133 MHz.

1.5.5 PowerPC Processor Features

Table 1 shows the chip size, type of technology used, power usage and other features of the different PowerPC processors.

Table 1 (Page 1 of 2). Processor Features

Processor	MHz	Watts	Bus width (bit)	Data width (bit)	L1 Cache (KB) 1	Transistors (millions)	Technology	Chip size mm^2
601	50	5.6	32	64	32	2.8	0.65 µ CMOS	120
	60	6	32	64	32	2.8	0.65 µ CMOS	120
	66	7	32	64	32	2.8	0.65 µ CMOS	120
	80	8	32	64	32	2.8	0.65 µ CMOS	120
	100	4	32	64	32	2.8	0.5 µ CMOS	74
603	66	2.5	32	32	8/8	1.6	0.5 µ CMOS	85
	80	3	32	32/64	8/8	1.6	0.5 µ CMOS	85

Table 1 (Page 2 of 2). Processor Features

Processor	MHz	Watts	Bus width (bit)	Data width (bit)	L1 Cache (KB) [1]	Transistors (millions)	Technology	Chip size mm^2
603e	100	3	32	32/64	16/16	2.6	0.5 µ CMOS	98
604	100	14	32	64	16/16	3.6	0.5 µ CMOS	196
	120	17	32	64	16/16	3.6	0.5 µ CMOS	196
	133	20	32	64	16/16	3.6	0.5 µ CMOS	196
620	133	33	64	64	32/32	6.9	0.5 µ CMOS	311

Note:

[1] A single figure indicates that there is just one cache unit. Two figures separated by a / indicates the amount of cache for the data cache unit and the instruction cache unit respectively.

Chapter 2. IBM Personal Computer and ThinkPad Power Series

The following chapter provides a detailed description of the general technical specifications as well as of the functionality of both the IBM Personal Computer Power Series and the IBM ThinkPad Power Series.

2.1 Overview

Several models of computers are available from IBM that feature the new PowerPC technology. They can be divided into two product lines, the workstation-type of computers of the RS/6000 line, and the personal computers of the Power Series line. The latter is the subject of this book.

The following are basically the two different types of personal computer available that are based on PowerPC technology:

- The IBM Personal Computer Power Series 830 and 850 are desktop type machines that extend the performance limit of the previously available desktop computers. They can cope with the increased performance needs of today's as well as tomorrow's applications.
- The IBM ThinkPad Power Series 820 and 850 are the lines of portable notebooks that add the increaced performance of the PowerPC technology as well as stunning multi-media features, such as video-conferencing and leading-edge audio support, to the mobile world.

Figure 7 on page 14 shows the new logo that appears upon power-on of any IBM Personal Computer that features the new PowerPC technology. It gives a visual clue to IBM's direction for a new, more intuitive way of working with computers.

The icons on the bottom show the changed approach to display the status of a PC during the critical period of power-on rather than displaying cryptic and meaningless characters and figures.

© Copyright IBM Corp. 1996

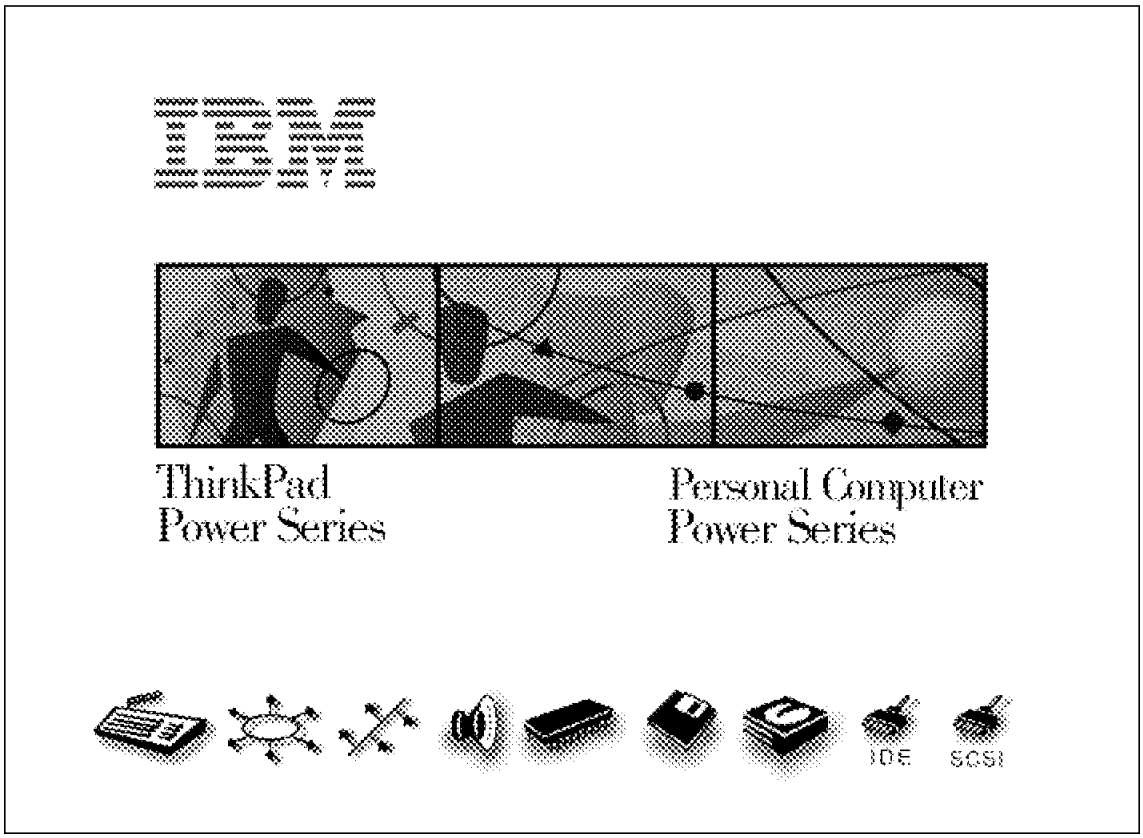

Figure 7. The IBM Power Series Boot Logo

2.2 IBM Personal Computer Power Series

The IBM Personal Computer Power Series product line has redefined how we think of and use personal computers. They offer the following:

- Combines the *power* of the PowerPC 604 microprocessor with the *affordability* of the personal computer.
- Gives your company the power to develop solutions that put you ahead of your competition:
  - Reengineering your information system with client/server designs
  - Taking advantage of sophisticated floating-point-intensive applications
- Offers a choice of the following preloaded operating systems:

  - AIX Version 4 for Clients
  - Windows NT Workstation 3.51 (PowerPC Edition)
- Uses PCI/ISA bus architectures (Token-ring and Ethernet) for access to industry-standard adapters.
- Includes:
  - 3-slot, 3-bay Personal Computer Power Series 830 (100 MHz)
  - 5-slot, 5-bay Personal Computer Power Series 850 (100 MHz, 120 MHz, or 133 MHz)
- Offers a choice of 540 MB, 728 MB, or 1 GB IDE hard drive, and up to 3 GB in the Power Series 850

The IBM Personal Computer Power Series 800 line offers, are the first computers from IBM with the blazingly fast performance of the PowerPC microprocessor in a personal computer. This high performance will give you application options such as speech dictation withou the use of special adapters.The Power Series 800 line gives commercial users the competitive edge they demand in an affordable desktop system. The ability to choose operating systems allows different groups within your company, such as engineers and business managers, to use the operating system that best runs their applications, all on one hardware architecture. Openness is no accident, these systems are designed to adhere to industry-standard specifications. A quad-speed CD-ROM, business-audio sound system and Ethernet connection come standard.

2.2.1 Technical Details

The following are the system details:

- Microprocessor
  - Power Series 830 - PowerPC 604, 100 MHz with standard 256 KB L2 cache
  - Power Series 850 - PowerPC 604, 100 or 120 MHz with standard 256 KB L2 cache or 133 MHz with standard 512 KB L2 cache
- Hardfile: 540 MB, 728 MB, or 1 GB IDE files
- Memory - 16 MB parity standard, expandable to 192 MB
- Superior expansion capability with the 5-slot and 5-bay chassis and integrated disk, graphics, audio, and network controllers
- High-performance SVGA PCI local bus graphics
- Support for up to four Enhanced IDE devices

- PCI local bus 10BaseT Ethernet
- Standard Business Audio including enhanced audio ports (line-in, line-out, microphone, speaker, joystick/midi)
- One 1.44 MB, 3.5-inch diskette drive
- One CD-ROM-4X XA drive
- Two high-speed serial ports (nine-pin) and one high-speed parallel port
- Keyboard and pointing device ports
- Advanced power management-capable
- Power, Performance, Potential multimedia presentation (in English)

The following are the technology details:

- 100 Mhz, 120 MHz, 133 MHz PowerPC 604 Processors

  The PowerPC microprocessors introduce reduced instruction set computing (RISC) to the desktop. This technology has been the choice for users who demanded high performance from their systems and are willing to pay for it. Now, with the PowerPC architecture, this performance is affordable to everyone.

- L2 Cache

  The IBM Personal Computer Power Series 830 100 MHz model and the IBM Personal Computer Power Series 850 100 MHz and 120 MHz models come with 256 KB L2 cache standard; the Power Series 850 133 MHz model comes with 512 KB L2 cache standard. This L2 cache improves performance by holding currently executing instructions in higher speed memory.

- Enhanced IDE Hard File Controller

  Advances in IDE controller design allow up to four devices to be controlled and increase the speed of operation

- CD-ROM-4X Drive Standard

  A CD-ROM-4X drive comes with each system. This helps eliminate the diskette shuffle when loading software and allows you to gain access to reference material and programs distributed on CD.

- PCI Local Bus-attached 10 Base T Ethernet
- Business Audio Standard

  Business Audio provides support for the emerging technologies of command/control, text-to-speech, and voice dictation.

- PCI Local Bus Graphics Controller

  A PCI bus standard graphics controller provides exceptional graphics performance, supporting multiple modes and video playback in a window or fullscreen.

Advanced Industrial Design

- Three-slot, three-bay (830) and five-slot, five-bay (850) designs, both with integrated graphics, audio, and Ethernet
- Vertical and Horizontal Positioning

  All components have been designed to operate in either the vertical or horizontal position. The Power Series 850 models come with a stand for the vertical position.
- Access Door

  The Power Series 830 and 850 models have a lockable sliding door that protects the media bays and power switch.

Figure 8 shows the desktop systems. Both models can be actually used either in horizontal or vertical position. The 850 model comes standard with a stand.

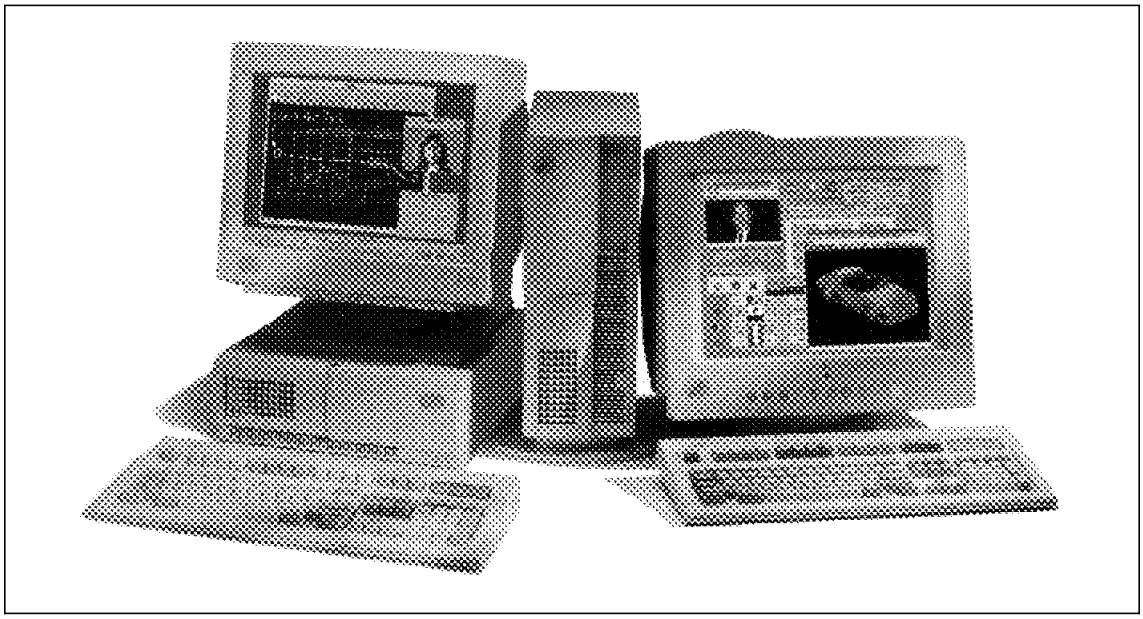

Figure 8. The IBM Personal Computer Power Series 830 and 850

2.2.2 Product Positioning

The IBM Personal Computer Power Series 830 and 850 systems are positioned as high-function, high-performance personal computers for the commercial desktop. These systems are ideal for the following:

- Customers looking for the competitive advantage of a superior performing desktop system:
  - Operating as a stand-alone or as a client in a client/server architecture.
  - Leveraging the performance to get work done faster or to embed new technologies like video conferencing and voice-enabled applications to make users more productive.
- Customers looking for an affordable entry system to run sophisticated floating-point-intensive applications:
  - Applications used in modeling and design work.
  - 2D mechanical CAD and 3D CAD applications like Professional CADAM.
- Customers who want to re-engineer their information technology processes:
  - Interested in adopting a multi-OS hardware platform that can be used across multiple departments, reducing the problems encountered by supporting various hardware platforms.

2.3 The IBM ThinkPad Power Series

The IBM ThinkPad Power Series product line has redefined how we think of and use mobile personal computers.

- Puts the power of the PowerPC 603e microprocessor into a computer to go.
- Offers a choice of preloaded operating systems on a system that fits into your suitcase:
  - AIX Version 4 for Clients
  - Windows NT Workstation 3.51 (PowerPC Edition)
- How about a video conference with a business partner or a chess game with a friend while sitting on a park bench? See below for details.

2.3.1 The IBM Personal Computer ThinkPad 820

Do you need power and portability? You can have both. This powerful notebook provides world-class performance with a PowerPC 603e (100 MHz) microprocessor, in a small lightweight system that can be battery or AC powered. Multitasking capability and the choice of high-performance, 32-bit operating systems, make the IBM ThinkPad Power Series 820 an ideal general business solution for mobile, field, and office professionals. The system is well-suited for extremely demanding computer uses. Its innovative design offers palm-rest space, built-in stereo speakers and integrated CD-ROM. Models of the IBM ThinkPad Power Series 820 with the optional G10 Graphics with Motion Video Adapter can send and receive composite video. Motion video input can be from a NTSC or PAL camcorder, displayed on a NTSC television monitor, or recorded on a NTSC VCR. In addition to motion video I/O capabilities, the IBM ThinkPad Power Series 820 has full multimedia support with built-in audio and integrated CD-ROM capability. All this capability comes in a sleek seven-pound system that meets the requirements for U.S. Energy Star compliance.

The following are the system details:

- New generation PowerPC technology, PowerPC 603e microprocessor (running at 100 MHz clockspeed) with integrated:
  - 32 KB Level 1 cache
  - Floating-point unit
  - Power management
- 256 KB level 2 cache
- 32-bit memory controller
- Large standard memory 16 MB or 32 MB, expandable to 48 MB
- PCI local bus G10 graphics, with optional motion video capability
- Integrated 16-bit business audio
- Built-in microphone and stereo speakers
- High-capacity, SCSI-2, customer-removable hard files, 540 MB, 810 MB, or 1.2 GB
- Built-in 2X-CD-ROM drive, user removable and exchangeable with diskette drive
- External 3.5-inch diskette drive
- Expandability:

  - Two PCMCIA slots, two type I/II, or one type III
  - Additional DIMM memory sockets, two available
  - User-removable hard disk drive
  - User-removable CD-ROM drive
  - ISA expansion port
- Usability:
  - Large 10.4-inch, picture measured diagonally, displays, active matrix TFT color with Black Matrix, 640x480 or 800x600 resolution
  - Familiar IBM 84, 85, or 89-key keyboard with integrated TrackPoint-III.
  - Efficient power management, operating system dependent
- Preloaded operating systems can be selected

2.3.2 Product Positioning

The IBM ThinkPad Power Series 820 is the compact mobile member of the IBM Power Series family. It is positioned as a price-performance leader of IBM's very successful ThinkPad family of mobile systems. In addition to protecting your investment in application software, the IBM ThinkPad Power Series 820 sets a new price-performance standard with its performance and multimedia features in a compact size.

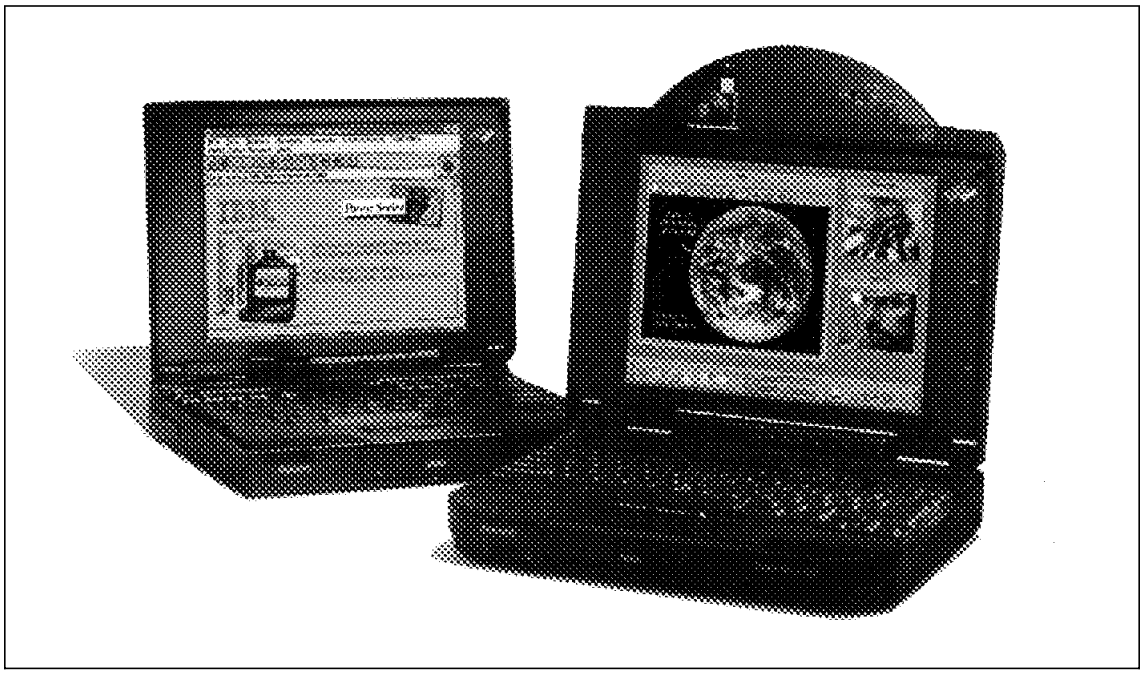

Figure 9. The IBM ThinkPad Power Series 820 and 850 with Mounted Video Camera

2.3.3 The IBM Personal Computer ThinkPad 850

With the body of a ThinkPad and the soul of a PowerPC, the IBM ThinkPad Power Series 850 allows you to carry collaborative and conversational computing wherever you go. This premium-function mobile product extends IBM's ThinkPad family with advanced features and blazing performance provided by its PowerPC 603e 100MHz processor. All models of IBM ThinkPad Power Series 850 take mobile productivity one step further by offering a standard G10 Graphics with Motion Video Adapter for video I/O, a snap-in video camera option, and voice-over-data capability using standard modems, plus the floating point unit of the PowerPC 603e microprocessor. Imagine having video conferences from your hotel room! These features, plus additional built-in functions like a multi-session CD-ROM, and audio I/O with microphone and stereo speakers, provide a system that is ideal for advanced collaboration and multimedia applications. Combine these features with those that have made the ThinkPad world class, brilliant active matrix 800x600 Black Matrix displays, the TrackPoint-III pointing device, PCMCIA expandability, and user-removable 1.2 GB hard disk drives, and you have a product that is ready for your applications today and in the future. All this

capability is wrapped in an award-winning, sleek, eight-pound system that meets the requirements for U.S. Energy Star compliance.

The following are the system details:

- New generation PowerPC technology - fast PowerPC 603e microprocessor, running at 100 MHz clockspeed with integrated:
  - 32 KB cache.
  - Floating-point unit
  - Power management
- 256 KB Level 2 cache
- 64-bit memory controller
- Large standard memory 16 MB or 32 MB, expandable to 80 MB or 96 MB
- PCI local bus G10 graphics with motion video
- IBM ThinkPad Power Series 850 video camera option
- Integrated 16-bit business audio
- Built-in microphone and stereo speakers
- High-capacity, SCSI-2, user removable hard files, 540 MB, 810 MB, or 1.2 GB
- Built-in 2X-CD-ROM, user removable and exchangeable with diskette drive
- External 3.5-inch diskette drive
- Expandability:
  - Two PCMCIA slots, two type I/II or one type III
  - Two IC DRAM memory slots
  - User removable hard disk
  - User removable CD-ROM
  - ISA expansion port
- Usability:
  - Large 10.4-inch, maximum viewable area when measured diagonally, active matrix color displays, with black matrix for reduced reflectivity, and 640x480 and 800x600 resolutions
  - Familiar IBM 84, 85, or 89-key keyboard with integrated TrackPoint-III
  - Efficient power management, operating system dependent

- Preloaded operating systems can be selected

2.3.4 Product Positioning

The IBM ThinkPad Power Series 850 is positioned as highest performance full-function member of the IBM Personal Computer and ThinkPad Power Series mobile family. At the same time, it is also positioned as the top of IBM's very successful ThinkPad family of mobile systems because of its collaborative power.

We can expect to see a rapid growing number and variety of different models and types of IBM Power Series computers soon in the marketplace.

2.4 Technical Details

This section takes a closer look at the technical details of the Power Series systems.

2.4.1 Power Series Systems Matrix

Table 2. PC Power Series Overview

	830	**850**	**TP 820**	**TP 850**
Type-Model	6050-xxx	6070-xxx	6040-xxx	6042-xxx
PowerPC 604 (100 MHz)	X	X		
PowerPC 604 (120 MHz)		X		
PowerPC 604 (133 MHz)		X		
PowerPC 603e (100 MHz)			X	X
Main memory (16 or 32 MB std. - 48 MB max.)			X	
Main memory (16 or 32 MB std. - 80 or 96 MB max.)				X
Main memory (16 or 32 MB std. - 192 MB max.)	X	X		
Harddisk (IDE; 540 or 728 or 1000 MB; 3000 MB max.)	X	X		
Harddisk (SCSI; 540 or 810 or 1200 MB)			X	X
CD-ROM (2-X)			X	X
CD-ROM (4-X)	X	X		

There is quite a variety of sizes of default installed main memory and hard disk due to the worldwide availability of the systems. Also due to rapidly

emerging and changing markets there might be an even broader range of systems that became available only after this book was published.

2.4.2 Video Support

One of the most obvious features of a computer, besides storing and processing data, is the capability to display data. The data can be text, graphics, pictures, animated graphics or even a movie. In the early days of computing due to the slow performance of the CPU, there was not much need for a high sophisticated video subsystem. The ability to print the data was most important. With powerful CPUs like the PowerPC 604, it is now possible to cope with the enormous amount of data that needs to be processed when displaying a movie. Keep in mind that there is a basic difference in how a television and a computer handle a picture. A television set has the relatively simple task of displaying the information contained in a picture in analog form. A computer deals with digital data. That is why it has to process the position and content of each tiny piece of a picture called a pixel in a digital calculation. Usually it is the cooperation of the CPU and a dedicated set of chips called the graphics subsystem that accomplish this task.

In the current line of Power Series computers we find different sets of chips that form the graphics subsystems to balance two major issues: one being performance the other being cost. The following list shows the currently available selection:

- G10, Western Digital WD90C24A2 chip set, is standard for the Power Series ThinkPad 820 and 850 systems
- E15, S3 Vision864 chip set, is standard for most of the Power Series 830 and 850 systems
- GXT150P graphics adapter
- S15, Weitek P9100 chip set, high performance graphics adapter
- H10, Weitek P9100 chip set, high performance graphics adapter

2.4.2.1 G10 Graphics

G10 graphics is standard in all ThinkPad models. It's integrated onto the system board featuring a WD 90C24A2 video controller chip and attaches to the the system via PCI local bus. Equipped with 1 MB of VRAM, it features a 640x480 or 800x600 resolution depending on the TFT (Thin Film Transistor) display of the ThinkPad and additionally 800x600 (in case of a the 640x480 TFT display) and 1024x768 if an external monitor is attached. In the latter case the TFT display is turned off, whereas when using the lower resolutions

both the TFT and the external display can be used simultaneously. Table 3 on page 25 shows the TFT display specification.

Table 3. Color TFT Display Specifications

Display	**640x480**	**800x600**
Panel size (inch)	10.4	10.4
Pixel pitch (mm)	0.3285x0.33	0.3285x0.33
Brightness (candela/m sq.)	110	90
Half brightness (candela/m sq.)	45	45
Typical contrast (factor)	100:1	110:1
Number of colors 1	256 K	256 K
Response time (ms)	30	30

Note:

1 Number of colors supported by the TFT display. Please note, that the number of actually displayed colors depends on the amount of memory of the display adapter.

To further enhance the already very powerful multimedia capability, the G10 graphics is available with an added motion video adapter. G10 Graphics with motion video adapter supports NTSC composite video (input and output), and PAL composite video (input only). The motion video adapter is a factory installed feature so you have to order it with the machine if it is not already standard for the specific model (the motion video adapter is standard for all ThinkPad 850 models). Table 4 shows some details of the G10 Graphics with the motion video adapter.

Table 4. The Motion Video Adapter

Graphics Modes	**640x480**	**800x600**	**1024x768**
NTSC comp. output 1	Yes	Yes	No
64K colors	Yes	Yes	No
256 colors (out of 256K)	Yes	Yes	Yes
Window panning support	n.a.	Yes	Yes
Motion Video supported	Yes	Yes	No

Note:

1 Level for video input PAL and input/output NTSC is 1 V peek-to-peek (CVBS Composite Video Biased Signal), negative sync. with an impedance of 75 Ohm. Video input and output resolution is 400 TV lines. Video frame buffer: 5.3 Mb; D/A converter 6 or 8 bit.

2.4.2.2 E15 Graphics

E15 graphics provides low-cost, medium-performance DRAM-based graphics on PowerPC systems with the PCI system bus. Integrated E15 graphics employs the 64-bit S3 Vision864 graphical user interface (GUI) accelerator, and the 16-bit 135MHz S3 SDAC. The Integrated E15 graphics come standard with a 2 MB frame buffer, providing for up to 1280 x 1024 resolution. The integrated E15 graphics supports multisync monitors having at least a 64 KHz horizontal scan capability, standard 15-pin D-shell (DB-15) monitor cable.
The GUI accelerator chip provides the following functions:

- Host (PCI) bus access of DRAM, GUI accelerator and CRT controller registers, and the RAMDAC
- Linear frame-buffer addressing
- 64-bit frame-buffer interface and internal data flow
- DRAM memory refresh and access control
- 16-bit pixel stream for screen refresh to the RAMDAC, via a 16-deep 8-byte-wide FIFO
- CRT controller (CRTC) functions
- GUI drawing functions, including BitBLTs and rectangle fills
- VGA compatibility
- Hardware cursor support

The RAMDAC performs the following functions:

- 16-bit pixel port throughput at up to 135 MHz, 8-bit pixel rate
- Pixel color translation through triple 256x6-Color LookUp Tables (CLUTs)
- 18 or 24-bit digital-to-analog RGB conversion through triple 8-bit DACs (Digital-to-Analog-Converter)
- CLUT bypass for 24-bit color modes
- Dual integrated phase-locked loops (PLLs) provide MCLK and DCLK to the GUI accelerator chip

The following resolutions and color depths can be supported by the integrated E15 graphics:

- 1280 x 1024 x 8-bpp (bit per pixel)
- 1024 x 768 x 8-bpp, 16-bpp
- 800 x 600 x 8-bpp, 16-bpp, 24-bpp
- 640 x 480 x 8-bpp, 16-bpp, 24-bpp

In general the operating system device driver, in concert with the user and application, is free to choose the resolution from the above list. The size of the attached monitor will determine optimum resolution and vertical refresh rate. The resolution is operating system dependent. Not all of the above resolutions are offered by all operating systems.

2.4.2.3 The GXT150P Graphics Adapter

The GXT150P graphics adapter is an 8-bit, 256-color adapter that attaches to the PCI local bus interface. The GXT150P is designed for mainly 2D applications including desktop publishing, X-window applications, 2D mechanical drafting, CASE, chemical and biological applications, and electrical CAD. When used with the AIX Softgraphics software, the GXT150P provides a cost-effective 3D platform. The GXT150P is available for the AIX and Windows NT environments. The following are characteristics of the GXT150:

- Hardware acceleration for:
  - Points
  - Lines
  - Triangles
  - Rectangles
  - Quadrilaterals
  - Bit block transfer
  - Pattern fill support
  - Rectangular and non-rectangular clipping
- 60 Hz to 77 Hz monitor refresh rates
- 256 colors from a palette of 16.7 million
- Meets ISO 9241 Part 3 on appropriate displays
- 3 MB of VRAM
- Hardware window support, four window ID bits
- Three hardware color maps
- 1024 x 768 and 1280 x 1024 resolution monitor support
- Occupies one PCI slot

Remember that the available resolutions depend on the video driver used.

2.4.2.4 The S15 Graphics Adapter

The S15 graphics adapter is a high-performance VRAM-based PCI graphics adapter with integrated video co-processor for use as a premium graphics solution. It comes in a 2 MB VRAM (fixed) version. The S15 graphics adapter supports multisync monitors having at least a 64 KHz horizontal scan capability, standard 15-pin D-shell (DB-15) monitor cable. The S15 graphics adapter consists of the Weitek P9100 GUI accelerator chip, the 170 MHz IBM RGB525 RAMDAC, Weitek 9130 video accelerator, the ICD2061A clock generator with 14.31818 MHz reference crystal, and 2 MB of VRAM frame-buffer memory. The S15 GUI accelerator chip provides the following functions:

- Host (PCI) bus access of VRAM, GUI accelerator and CRT controller registers, RAMDAC, 9130 Video Co-processor, and clock generator
- Linear frame-buffer addressing
- Frame-buffer arbitration for video co-processor support
- VRAM memory refresh and access control
- CRT controller functions
- GUI drawing functions, including BitBLTs and quadrilateral polygon draws and fills
- Clipping and raster options during blits and draw/fills
- VGA compatibility
- VESA DPMS power management support

The RAMDAC performs the following functions:

- 64-bit pixel port throughput at up to 170 MHz pixel rate supports display modes up to 1600 x 1280 at a refresh rate of 60 Hz
- Pixel color translation through triple 256 x 8 CLUTS
- 24-bit digital-to-analog RGB conversion through triple 8-bit DACs
- Hardware cursor support
- Integrated digital phase-locked loop provides serial clock and divided dot clock from a 50 MHz reference clock

The following resolutions and color depths can be supported by the S15 Graphics Adapter, at up to 170 MHz pixel rate (PIXCLK):

- 1280 x 1024 x 8-bpp
- 1024 x 768 x 8-bpp, 16-bpp
- 800 x 600 x 8-bpp, 16-bpp, 24-bpp

- 640 x 480 x 8-bpp, 16-bpp, 24-bpp

All of the above modes can be used at ISO screen refresh rates except the 1600 x 1280 mode, which is limited to 60 Hz. In general the operating system video driver and the user application determine what resolution to choose. The optimum resolution and vertical refresh rate will be determined by the size and capabilities of the attached monitor. The adapter occupies one PCI slot. The adapter features a connector to plug in the optional Video Capture Enhancement card (see 2.4.2.6, “The Video Capture Enhancement” on page 30).

2.4.2.5 The H10 Graphics Adapter

The H10 graphics adapter is a high-performance 24-bit VRAM-based PCI graphics adapter with integrated video co-processor for use as a premium graphics solution. Right now it can only be used with Windows NT. The H10 graphics adapter comes in a 4 MB fixed version. It is a 24-bit graphics adapter and can provide a true color (approximately 16.7 million colors) frame buffer at up to 1280 x 1024 resolution. The H10 graphics adapter supports multisync monitors having at least a 64 KHz horizontal scan capability, standard 15-pin D-shell (DB-15) monitor cable. The H10 graphics adapter consists of the Weitek P9100 GUI accelerator chip, the 170 MHz IBM RGB525 RAMDAC, Weitek 9130 video accelerator, the ICD2061A clock generator with 14.31818 MHz reference crystal, and 4 MB of VRAM (Video RAM) frame buffer memory. The GUI accelerator chip provides the following functions:

- Host (PCI) bus access of VRAM, GUI accelerator and CRT controller registers, RAMDAC, 9130 Video Co-processor, and clock generator
- Linear frame buffer addressing
- Frame buffer arbitration for video co-processor support
- VRAM memory refresh and access control
- CRT controller functions
- GUI drawing functions, including BitBLTs and quadrilateral polygon draws and fills
- Clipping and raster options during blits and draw/fills
- VGA compatibility
- VESA DPMS power management support

The RAMDAC performs the following functions:

- 64-bit pixel port throughput at up to 170 MHz pixel rate supports display modes up to 1600 x 1280 at a refresh rate of 60 Hz.

- Pixel color translation through triple 256 x 8 CLUTs
- 24-bit digital-to-analog RGB conversion through triple 8-bit DACs
- Hardware cursor support
- Integrated digital phase-locked loop provides serial clock and divided dot clock from a 50 MHz reference clock

The following resolutions and color depths can be supported by the H10 Graphics Adapter, at up to 170 MHz pixel rate (PIXCLK):

- 1600 x 1280 x 4-bpp, 8-bpp, 16-bpp
- 1280 x 1024 x 4-bpp, 8-bpp, 16-bpp, 24-bpp
- 1024 x 768 x 4-bpp, 8-bpp, 16-bpp, 24-bpp
- 800 x 600 x 4-bpp, 8-bpp, 16-bpp, 24-bpp
- 640 x 480 x 4-bpp, 8-bpp, 16-bpp, 24-bpp

All of the above modes can be used at ISO screen refresh rates except the 1600 x 1280 mode, which is limited to 60 Hz. In general the operating system video driver and the user application determine what resolution to choose. The optimum resolution and vertical refresh rate will be determined by the size and capabilities of the attached monitor. The adapter occupies one PCI slot. The adapter features a connector to plug in the optional Video Capture Enhancement card.

2.4.2.6 The Video Capture Enhancement

The Video Capture Enhancement is a cost-effective attachment to the S15 or H10 Graphics Adapter providing full color video input support. The Video Capture Enhancement attaches to the S15 or H10 adapter via an internal ribbon cable. One ISA bus slot is required for the Video Capture Enhancement, from which it derives its power and physical support. This low-cost design offers a competitive price point for video enablement. The combination of the S15 or H10 Graphics Adapter and the Video Capture Enhancement provides the ability to capture and linearly scale the incoming video image from an NTSC, PAL, or SECAM format source and monitor the video in a user-defined window. Incoming video sources may be either composite or S-video, which allows attachment of video cameras, VCRs, camcorders, laser disk players, and similar standard video devices including television tuners. For AIX clients, Ultimedia Services Version 2.1.2 is required. Video capture enhancement specifications:

- Video Input Formats: PAL, NTSC, SECAM
- External Connections: Composite Video -- US RCA Jack, S Video, 4-pin Mini-DIN

- Card Type: ISA

2.4.3 System Status Indicators

The IBM Personal Computer and ThinkPad Power Series system supports a number of status indicators both in the system unit as well as in the attached keyboard.

Indicator - UMCU: The Universal Micro Control Unit (UMCU) controls the Battery indicator, that detects low battery voltage, Num Lock status, Caps Lock status, Scroll Lock status, System Suspend status, and System Power status. Figure 10 and Table 5 gives an overview of the various indicators and their meaning.

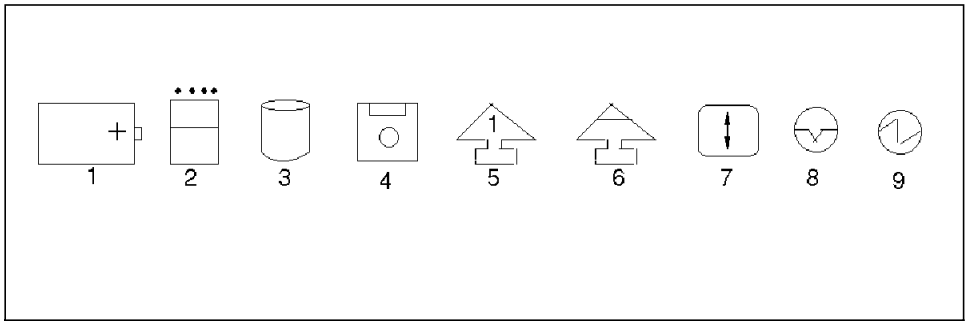

Figure 10. Status LED Indicator for ThinkPad Power Series 850 and 820

Table 5 (Page 1 of 2). System Status Indicator for ThinkPad Power Series 850/820

Symbol number	Color	Meaning
1 Battery Power Status	- Green - Yellow - Orange - Orange (flashing)	Green: Enough power remains for operation. Yellow: Some power remain for operation. Orange: The battery pack needs charging. Orange (flashing): The battery pack needs charging immediately.
2 PC Card In-Use	- Orange	Turns on when the PCMCIA card is accessed (see below for more detail)
3 Diskette Drive In-Use	- Orange	Turns on when data is read from or written to a diskette. Do not enter suspend mode or eject the diskette when this indicator on (see below for more details).

Table 5 (Page 2 of 2). System Status Indicator for ThinkPad Power Series 850/820		
Symbol number	**Color**	**Meaning**
4 Hard Disk In-Use	- Orange	Turns on when data is read from or written to the hard disk. Do not enter suspend mode or turn off the computer when this indicator is on (see below for more details).
5 Numeric Lock	- Green	When on, indicates the numeric keypad on the keyboard is enabled. It is enabled and disabled by pressing and holding the Shift key; then pressing the Num Lock key.
6 Caps Lock	- Green	When on, indicates the Caps Lock mode is enabled. All alphabetic characters (A-Z) are entered in capital letters without pressing the Shift key. It is enabled and disabled by pressing the Caps Lock key.
7 Scroll Lock	- Green	Alternately turns on and off each time the Scroll Lock key is pressed. While this indicator is on, the Arrow keys are used as screen-scroll function keys. In this state, the cursor cannot be moved with the Arrow keys. Not all application program support this functions.
8 Suspend Mode	- Green - Green (flashing)	When on this indicates that the computer is in suspend mode. When flashing this indicates that the computer is entering hibernation mode, or is resuming normal operation.
9 Power On	- Green	Shows that the computer is operational. This indicator turns on when the computer is turned on and the computer is not in suspend mode.

PC Cards: ThinkPad Power Series 850/820 have two slots that allow you to plug in credit card size PCMCIA cards that support PCMCIA Standard Release 2.1 or later. PCMCIA is an acronym for the Personal Computer Memory Card International Association that is an organization for setting standards for the personal computer cards, hereafter called PC cards.

The following are the three types of PC cards:

- Type I: 3.3 mm (0.1 inch)
- Type II: 5.0 mm (0.2 inch)
- Type III: 10.5 mm (0.4 inch)

The only difference is the thickness of the cards. This LED indicates whether a PC card is in the PCMCIA or not.

Diskette Drive Indicator: This LED lights when the motor ready signal is active. The LED indicates where the diskette media is inside of the drive. Removing the diskette media from the drive during LED lighting will cause an error code.

Hard Disk Indicator: This LED indicates reading or writing to the hard disk.

CDROM Indicator: This LED has multi functions indicating the following CD-ROM conditions:

- LED stays on: Errors or cata transferring through the SCSI bus
- LED blinks: Playing audio and video

2.4.4 Audio Support

To make up a computer fully multimedia capable, in addition to the video support, you need to add audio support. Derived from the specifics of a human ear one can say that the maximum frequency of an audio signal that has to be considered is 20,000 Hz. Generally today the bandwidth for HIFI compliant systems goes from 20 to 20,000 Hz The upper frequency limit is of importance to a multimedia system because it determines how fast samples have to be taken from the analog signal and stored as digital data. Replaying the data involves the opposite step, that is, transforming the digital data into an analog waveform. A physical theorem says that the frequency to take samples from an analog signal has to be at least twice the maximum audio frequency. If the sampling rate is lower while recreating the analog waveform out of the digital data an effect called aliasing occurs that distorts the audio signal. Basically it is an overlapping of the amplitude over time curve that occurs due to the fact that the curve is copied multiple times on the frequency axis in equal distances of the sampling frequency. This leads to the value of 44.1 KHz that is standard for the compact disc. Maximum sampling frequency that can be handled by all Power Series models is 48 KHz, well beyond the HIFI requirement. The dynamic that is the factor of the loudest to the lowest tone is the other important point in audio systems. Due to the fact that the amplitude of the analog signal is sampled and stored as digital values there is a granularity which is determined by the available bits to store each sample. Because the sampling frequency times the bits per sample defines the rate of the data to be processed by the computer, previous and less powerful computers tried to reduce the data rate by reducing the supported bits per sample value. The IBM Power Series supports 16-bits per sample that leads to a dynamic range of roughly 96 dB.

A space shuttle at take off creates a dynamic noise of roughly 90dBA at a distance of 100 meters in comparison to the whispering excitement prior to the launch. In conjunction with the above mentioned 48 KHz maximum sampling rate this leads to a data stream of 76.8 Kbps per audio (left/right) channel.

Audio specification:

- CS4232 crystal chip
- Connectors for microphone and headphones
- Connectors for line in/out, not on TP820, and joystick/MIDI, not on ThinkPads
- Supports the following standards:
  - µ-law and a-law compression/decompression
  - ADPCM (IMA) compression/decompression
  - Business audio
  - MPU 401 MIDI interface
  - Analog joystick interface
  - 16-Bit stereo record and playback

Business audio hardware performance and specifications:

- Sampling rate: 5.5 to 48 KHz maximum
- Channel bandwidth: 20 Hz to 20 KHz, +1/-3 dB
- Dynamic range: 96 dB, 16-bit
- Line input S/(N+D), signal to noise ratio: 80 dB minimum
- Microphone input S/(N+D): 60 dB minimum
- Built-in microphone (ThinkPad): 55 dB mininum

Line input, all models except the TP 820:

- Input impedance: 10 K Ohm
- Signal level: 2 V (RMS), 5.5 V peek-to-peek maximum
- Connector: 3.5mm stereo minijack

Microphone input:

- Input impedance: 2.7K Ohm
- Phantom power: Stereo 0.5 mA nominal at 2V(DC)

- Signal level: 10 mV(RMS) nominal to 70 mV(P-P) maximum
- Gain: 26 to 68 dB
- Connector: 3.5 mm Stereo minijack

CD-DA input, internal:

- Input impedance: 10 K Ohm
- Signal level: 0.75 V (RMS)
- Connector: 4-pin connector

Line output, all models except the TP820:

- Output impedance: 7K Ohm
- Signal level: 1 V (RMS) nominal.
- Connector: 3.5 mm stereo minijack.

Headphone output:

- Output impedance: 16 Ohm, requires 16 Ohm headphone impedance
- Signal level: 2 V (RMS)
- Connector: 3.5 mm stereo minijack

System speaker output:

- Impedance: 8 Ohm, requires 8 Ohm or greater speaker impedance
- Power output: 1 W
- Connector: 2-pin berg connector

Amplified speaker specifications:

- Rated output per channel: 14 W @ 1 KHz, 0.5% THD, 22 W @ 1 KHz, 10% THD
- Frequency response: 20 Hz to 20 KHz, +/-2 dB
- Input impedance: 2 K Ohm.

Personal microphone specifications:

- Microphone input impedance: 2.2 K Ohm
- Headphone impedance: 8 Ohm
- Input frequency response: 100 Hz to 20 KHz
- Signal to noise ratio: 50 dB minimum, 1 Pa, 1 KHz, A weighted
- Cord length: 2 meters

2.5 Operating Systems and Applications

Currently the following operating systems are available for your Personal Computer Power Series:

- AIX: This is the IBM version of UNIX that is already very successful on IBM's RS/6000 systems
- Windows NT (PowerPC-Edition) Version 3.51: An adapted version of Microsoft's Windows NT for the PowerPC

From this list you can see that you can choose between two major operating systems, a choice that is unsurpassed in the industry. When you buy a Personal Computer Power Series you can do so with an operating system pre-installed or as a plain system. In any case, there might be situations where you need to reinstall the operating system. As all available Personal Computer Power Series systems feature a CD-ROM drive, it is the best and easiest way to get the operating system. This saves you considerable amount of time and money as you only have to deal with one or two CDs rather than a large amount of diskettes. Data security on a CD is much higher than on a diskette. The only way to destroy data is actually to mechanically destroy the CD. It is remarkable that with the Personal Computer Power Series system you have a system than can boot from three devices: the hard disk, the diskette or the CD-ROM drive. The Personal Computer Power Series systems feature a new way to handle the administration of the different hardware components of a system. Until now there were only dedicated programs either on a separate diskette or built into the hardware that allowed for the manipulation of the different devices. For example,to change the boot sequence in which the system scans the devices for a bootable media, you had to start a service program like Easy Setup, in the case of a ThinkPad, either from diskette or from the hard disk. You can still do this with the Personal Computer Power Series systems, however now, the operating system can access and manipulate these data. This means that you may get an object from your operating system that enables you to view and manipulate the data. The operating system itself is capable of manipulating them, for example, to ensure system security or to do power management related tasks. As an example, AIX changes the boot sequence in which diskette, CD-ROM and hard disk are scanned for a valid boot loader to ensure security, by only allowing the hard disk to be bootable. This means that if you want to install, for example, Windows NT over AIX, the ARC-diskette would not work.

Note: ARC means Advanced RISC computing.

The following are two ways to get around this situation:

- In case of the desktop systems, change the boot sequence using the System Management diskette or use Easy Setup in case you have a ThinkPad. Use this choice to permanently change the boot sequence until the operating system itself changes it again later.
- Press F5 during power-on after the keyboard icon is displayed on the boot screen but before the last icon is displayed. This will allow you to change the boot sequence to the default value (factory setting). This will allow you to boot from a diskette. In this case from the ARC diskette.

Note: AIX boots directly from the CD-ROM.

The following paragraphs give some tips on how to install the individual Operating System.

2.5.1 Windows NT

Be sure that you have the version 3.51 (Build 1057: Power Managed Version Z (PN 40H0168) or later of Windows NT.

Windows NT 3.51 without power management will work but you will not be able to use the power management support that is provided with the power managed version.

To install Windows NT:

1. Backup all the data that you still need
2. Insert the ARC diskette and the NT CD-ROM into the drives
3. Switch power on or restart the computer
4. On the Main Boot Menu panel select **Installation and Setup Services** and press Enter
5. Select **Simple Setup** and press Enter
6. Select **Full Install** and press Enter
7. Type Y twice to confirm that you do want to continue with the installation
8. Press any key to continue. A message is displayed that a boot partition was successfully created. Press any key to continue.
9. A partition of 5 MB was created on the first physical hard disk on your system that holds the boot loader (ARC) that enables the computer to start the operating system after power-on. You now have the choice to either:

- Select One Drive: This will format the entire remaining space on the first hard disk as a FAT (File Allocation Table) partition thus Windows NT will use the FAT file system only
- Select Two Drives: This will create a small FAT partition that holds the operating system loader and any other files that must be loaded directly before the OS is operational. The remainder of the disk, where the main portion of the OS goes, can then be formatted to either use the FAT or the NTFS (NT file system).

10. We suggest you to use the NTFS option. Press any key to continue after the OS boot partition is up.
11. Select **Set Up Windows NT from CD** and press Enter
12. Follow the instructions on the screen. Use **Express Setup**
13. Make sure that you select **Unpartitioned space** to hold NT otherwise you would wipe out either the hardware or OS boot loader partition.
14. Select **NTFS** and press Enter. The partition will be formatted and the system files are copied from the CD onto the harddisk.
15. Follow the instructions on the screen to complete the installation.

Note: All Personal Computer Power Series desktop models have Ethernet capability built onto the system board. If you do not have a network connected to your Personal Computer Power Series and want to install Windows NT without network support do the following:

- Select Cancel on **AMD PCNET PCI Ethernet Adapter** panel.
- Select No Network on the Add Network Adapter panel.
- Select OK on the Exit Windows NT Workstation Networking Setup panel.

You can install network support later by using the Network object in the Control Panel of Windows NT.

After the installation is complete shut-down and reboot the system. Press Ctrl+Alt+Del to log in.

Note: The current version of Windows NT does not support programs that require protected mode support. If you try to install or start programs like Microsoft Flight Simulator in an MS DOS command prompt window, you will get a message DOS/16M error = ffl15 protected mode only with 386 or 486. This may change in a later version of NT.

2.5.2 IBM AIX (UNIX)

To install AIX:

1. Backup all the data that you still need
2. Insert the CD AIX Version 4 for Clients. Ultimedia Services for AIX and SoftWindows (PN 40H0121) and reboot.
3. Follow the instructions on the screen.

Note: If you switch off power with the power on/off switch it takes about two minutes until the system actually powers off. During the shut down phase, the power indicator is blinking. This will not stop until the power finally is switched off.

2.5.3 Demo Applications

This chapter lists some demo applications that are available for the various operating system platforms.

Note: More demo applications might be available by the time this book is published or soon after.

2.5.3.1 The Personal Computer Power Series Program Pack

To install the Personal Computer Power Series Program Pack (PN 30H1969), that includes the Power-Performance-Potential presentation, regardless of what the documentation says that comes with the CD:

1. Insert the Program Pack CD into the CD-ROM drive.
2. From the NT Program Manager select **File** then **Run**.
3. Type x:\nt\pps\welcome\apps\psinstal.bat where x: denotes the drive letter of the CD-ROM.
4. Press Enter.
5. After the install program finishes, shut down and restart the system.
6. The Power PC Series Welcome program will be started automatically (same as if you would have a new system with the operating system preloaded).
7. Cancel the program by clicking on the red button. After the program terminates a program group, the IBM Power Series is created.

Chapter 3. The IBM Power Series System Architecture

The PowerPC Reference Platform Specification provides a description of the devices, interfaces, and data formats required to design and build a PowerPC based industry-standard computer system. This specification defines a system architecture which covers most traditional computer systems, from portable notebooks to servers. It gives system designers the freedom to choose the level of market differentiation and enhanced features required in a given computing system without carrying obsolete interfaces or loosing compatibility.

The IBM Personal Computer and ThinkPad Power Series is compliant to the PowerPC Reference Platform Specification.

The following chapter will provide technical details on the system architecture, including teh following:

- System Boards
- Bus Architecture
- Memory Subsystem
- Disk Subsystem
- Video Subsystem
- Input/Output Subsystem
- Adapters and Features
- Audio Subsystem
- Firmware
- Power Management
- Security
- Easy Setup and System Management Services

Let us first look at the Personal Computer Power Series systems. Figure 11 on page 42 shows the block diagram.

© Copyright IBM Corp. 1996

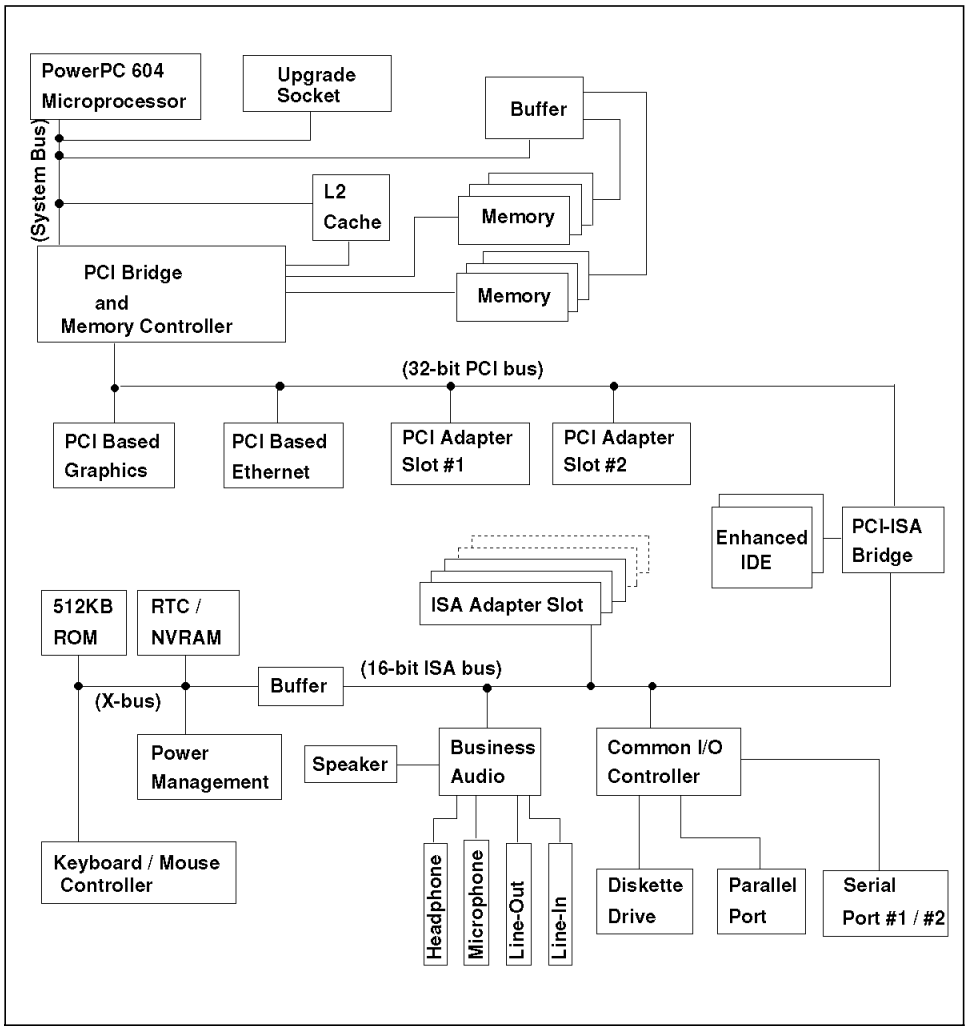

Figure 11. Hardware Block Diagram of the Personal Computer Power Series Systems

In the upper left-hand corner we see the PowerPC 604 processor. The upgrade socket next to it can be used for a future 604+ processor. The PowerPC architecture inherits full upgrade compatibility. All your applications including the operating system itself will run unmodified. Below the processor and upgrade socket we see the memory subsystem with its buffer, L2 cache and system memory. The whole processor-cache-memory block uses a PCI-bridge to connect to the PCI bus. Also, connected to the PCI bus are, from left to right, the graphic subsystem, Ethernet subsystem, PCI-adapter slots 1 and 2 and a PCI-to-ISA bridge.

The ISA-bus in the lower part of the picture connects, from right to left, a common I/O controller, 3 or 5 ISA-adapter slots, the business audio subsystem as well as a secondary ISA-bus, the X-bus, via a buffer stage. Apart from the business audio subsystem this part is pretty much an ISA or PC compatible configuration with one exception, the power management subsystem that gives the system a limited power saving capability.

Let us now look at the ThinkPad Power Series systems. Figure 12 on page 44 shows the block diagram of a ThinkPad Power Series 820 system. The difference in the ThinkPad Power Series 850 is mainly in the area of video performance to satisfy the extended performance needed when using the snap-in video camera option.

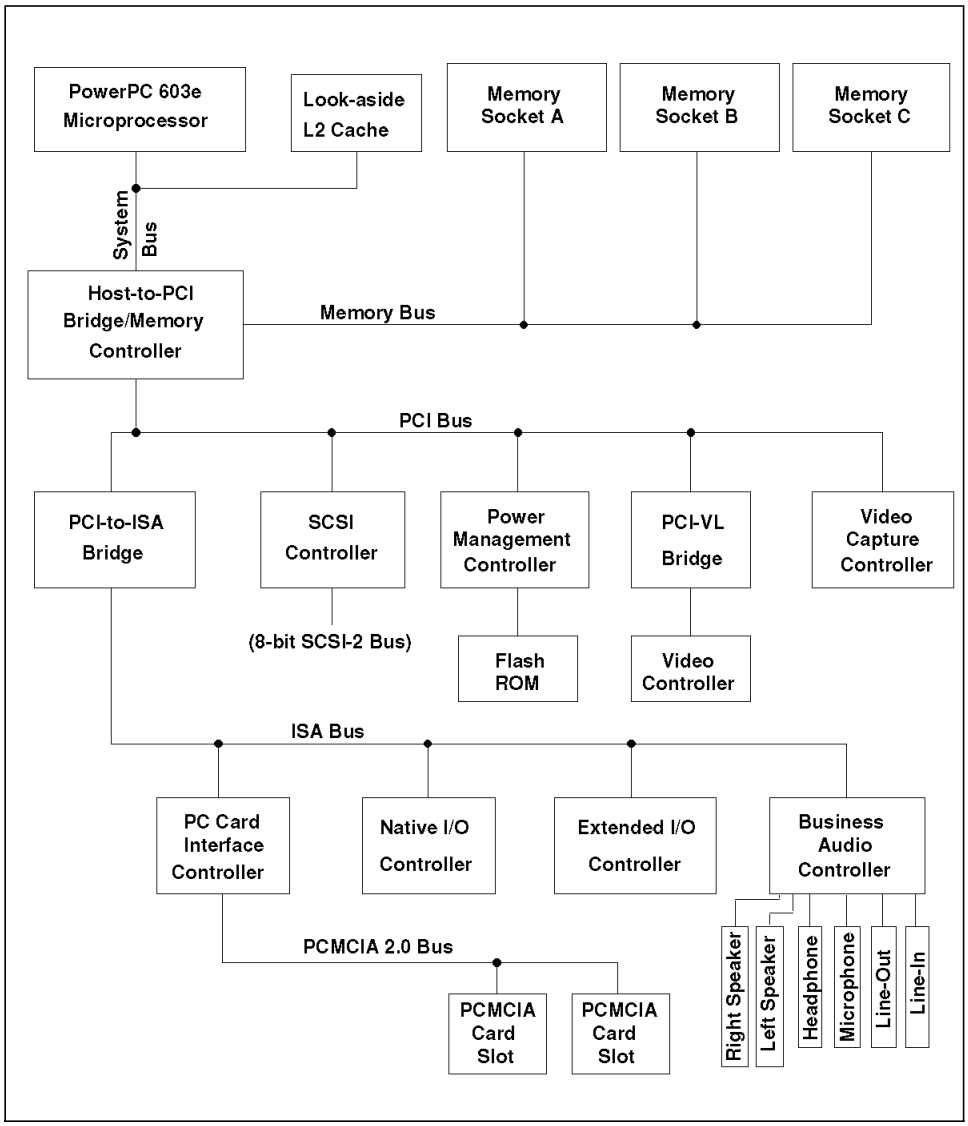

Figure 12. Hardware Block Diagram of the ThinkPad Power Series 820 System

In the upper left-hand corner we see the PowerPC 603e microprocessor that was specifically designed for portable systems. The most obvious difference is the addition of power saving capabilities. We can see in the upper half of the block diagram that the microprocessor, cache, memory and PCI-bridge look pretty similar to the desktop systems. We see a difference however, when we look at the PCI bus and the attached subsystems. The disk subsystem uses a SCSI controller in contrast to the EIDE controller used by

the desktop systems. Due to the power saving requirements a power management controller was added. The video subsystem uses a PCI VESA local bus bridge to support VLB video. Remember, the desktops use a PCI video subsystem hooked to the PCI system bus. The addition of a video capture controller supports the video capabilities as well as the optional video camera. The ISA bus section, uses a PCI-ISA bridge similar to one the on the desktops. The major difference is the addition of a PC Card (PCMCIA) controller to support these credit card size adapters that make mobile life so easy.

3.1 IBM Personal Computer and ThinkPad Power Series System Boards

The following sections provides technical details on the system boards used in the IBM Personal Computer and ThinkPad Power Series.

The system board contains the major electronic components such as the microprocessor, cache and system memory, system-I/O chips, video and audio chips as well as an Ethernet chipset. The components are connected through several buses such the following:

- System bus
- PCI bus
- ISA bus

These buses ensure that the data transfer between the different subsystems happens as fast as possible.

3.1.1 The IBM Personal Computer Power Series System Boards

The system board for the IBM Personal Computer Power Series 830 and 850, is designed to industry standard dimensions of 9″ by 13″ (22.5mm x 32.5mm) outline. It requires +3.3 and +5 volt to power most of the components and +12 and -12 volt to support some of the peripheral features such as the serial interface (V24). The processor upgrade socket requires +2.5 volt for the 604+ and uses a plugable daughter card that contains a regulator to convert +5 volt into +2.5 volt. -5 volt is supplied to the ISA slot connectors via the riser card. Figure 13 on page 46 shows the layout of the system board for the IBM Personal Computer Power Series systems 830 and 850.

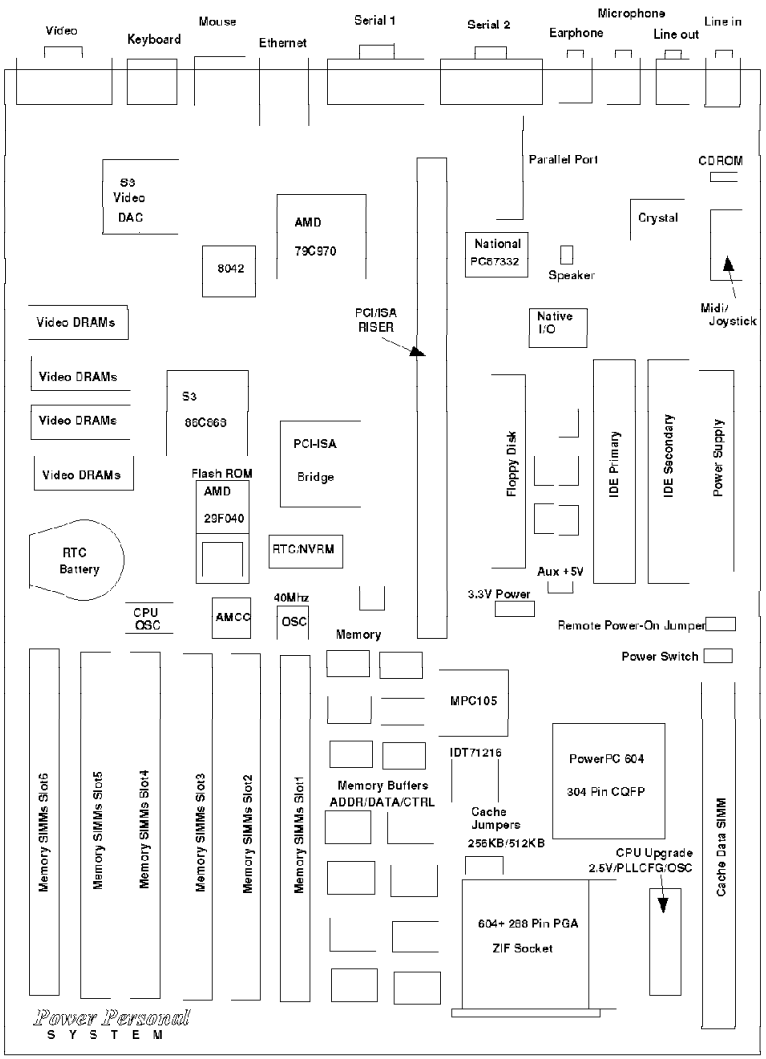

Figure 13. System Board of the Personal Computer Power Series 830 and 850

3.1.1.1 Memory Subsystem

The memory subsystem in the IBM PC Power Series 830 and 850 can support up to 192 MB of system memory on six 72-pin industry standard SIMM (Single Inline Memory Module) sockets. Each SIMM socket can support 4 MB, 8 MB, 16 MB, or 32 MB of 70 ns parity SIMMs, and must be installed in pairs. The DRAM (Dynamic Random Access Memory) subsystem is 72-bits wide, 64 data bits and 8 parity bits by requiring two industry standard 72-pin SIMMs (36-bits wide each) per bank of memory.

The memory controller has the following major features:

- Burst or single beat access from CPU and PCI bus
- Two industry standard 72-pin SIMMs per one/two banks of parity memory
- Timing support of 70ns DRAMs.
- Write buffering and read prefetch for PCI master accesses
- Support for use of mixed types of SIMMs (8 MB,16 MB, and 32 MB)
- Non-interleaved memory access operation.

3.1.1.2 Level 2 (L2) Cache Subsystem

The IBM Personal Computer Power Series 830 and 850′s L2 cache subsystem is integrated onto the system board and is always present in the base system. It is not available as a performance upgrade option. The L2 cache controller is contained in the PCI bridge and memory controller and can use either burst SRAMs (Static Random Access Memory) or asynchronous SRAMs. The cache controller does not include the tag function, but interfaces to an IDT 71216 cache-tag, RAM organized as a 16 K x 15 array. The IDT tag RAM has 12 tag bits plus three separate bits for valid, dirty, and write-through status. This allows the Personal Computer Power Series to support a 512 KB copyback cache. The L2 cache contains a 136 position dual readout SIMM socket and can optionally support parity on the cache data RAM, depending on what type of SIMM is installed. The IBM Personal Computer Power Series 830 and 850 cache subsystem supports the following cache data SRAM types for PowerPC processors:

- IBM Chip, 256 KB Asynchronous SRAM Module, 15 ns access, 32 K x 64
- IBM Chip, 512 KB Synchronous Module, 66 MHz, 64 K x 72

3.1.1.3 PCI Bridge/Memory Controller (PCIB/MC)

The desktop system uses the Motorola MPC105 Eagle chip for the PCIB/MC function. Eagle is a highly integrated chip that provides the PowerPC 604 microprocessor's host interface to the Peripheral Component Interconnect (PCI) bus, along with the main system memory controller, and it also contains a second level cache controller that interfaces to external L2 cache memory. Eagle's processor system bus interface has a 64-bit wide data bus and a 32-bit wide address bus. It contains the system bus arbitration function, provides support for full memory coherency, and pipelining of Personal Computer 604 processor accesses. Eagle supports concurrent bus transactions on the processors system bus and the PCI bus.

The MPC105 Eagle chip runs at 66 MHz and is packaged into a ball grid array pinout, that is, in a 16″x19″ (21mm x 25mm) array with a ball pitch equal to 1.27 mm. Eagle is implemented in 0.5 µ CMOS 5L technology and the operating voltage is +3.3 volt.

3.1.1.4 Flash ROM

The system board of the Personal Computer Power Series 830 and 850 is designed to support a maximum of 1 MB Flash ROM. The base 512 KB is soldered to the system board and the second 512 KB is socketed so that it can be optionally installed if needed for POST and BOOT code.

A maximum of 16 MB ROM space is specified by the architecture but the system board utilizes only two 512 KB devices. After power on, the initial code that is fetched by the processor is supplied from these devices.

3.1.1.5 PCI Based Graphics - Video Chip (S3 DXP-2, 86C864)

The IBM Personal Computer Power Series 830 and 850 systems have built video support onto the system board. The video subsystem consists of mainly a S3 86C864 DXP graphics accelerator chip, a 16-bit S3 SDAC, and 2 MB of Video DRAM Memory. The 86C864 is a 64-bit DRAM-based graphics accelerator chip, that provides high resolution, true color, and multimedia capabilities on the Personal Computer Power Series 830 and 850 systems. The S3 86C864 chip is a 100 percent compatible superset of the VGA standard, and is VESA compliant for SuperVGA (SVGA) modes. It is attached to the Personal Computer Power Series 830 and 850 subsystems via the PCI bus. The video DRAM used is 16-bit wide and the system ships with four DRAM chips populated. The data path between the video memory and the graphics accelerator is 64-bits wide, and the memory speed is 70ns.

3.1.1.6 PCI Based Ethernet - Am79C970

The PCnet Am79C970 chip provides Ethernet connectivity on the Personal Computer Power Series 830 and 850 system board. The Am79C970 provides a highly integrated PCI interface and its bus master implementation provides high data bandwidth and throughput while requiring low CPU and system bus utilization. The Ethernet subsystem on the Personal Computer Power Series 830 and 850 provides a 10BaseT (RJ45) network connector with interface to twisted-pair-medium.

The Am79C970 supports the following main features:

- Fully compliant PCI 2.0 32-bit bus master interface
- Integrated DMA buffer management unit for low CPU/Bus utilization
- Supports DMA scatter/gather
- IEEE 802.3-defined Media Access Control (MAC) function
- Individual 136-byte transmit and 128-byte receive FIFO for increased system latency
- Twisted-Pair Transceiver Media Attachment Unit (10BaseT)
- Jumperless design via EPROM interface
- Supports Ethernet power savings snooze mode with 10BaseT link

3.1.1.7 PCI-ISA Bridge

This section describes the chip and related subsystems that control the PCI to ISA bridge and the PCI attached IDE interface.

The PCI-to-ISA bridge includes functions such as PCI arbiter, PCI-bus-to-ISA-bus translator and PCI configuration registers. All PCI cycles that go to the ISA bus will pass through this chip and all ISA DMA/Master cycles to main memory will also go through this chip.

A PCI attached IDE interface provides enough performance to be able to support four IDE devices in ATA mode 0, 1, 2, or 3.

This chip includes the basic system support functions such as DMA, interrupts, and timers. Support is provided for a keyboard/mouse controller or a 80CC51SL keyboard controller, flash ROM, and additional NVRAM on the system data bus. A decoding mechanism is provided to support an external RTC chip. Two general purpose I/O decodes are also provided for system use.

Clock Generation: The primary clock generation is accomplished with an AMCC 3506 chip. The AMCC chip receives a 66 MHz input frequency and provides 10 outputs at the same frequency and 10 divide-by-2 outputs at 33MHz. The 66 MHz outputs are used for the PowerPC 604 processor and the L2 cache subsystem while the 33 MHz outputs are used for PCI devices.

I/O frequency generation is supported by the ICS 9154 chip. The ICS chip provides a 14.31818 MHz frequency for the video subsystem, the PCI/ISA riser card interface, and the PCI-ISA bridge chip. It also generates a 12 MHz frequency for the keyboard/mouse controller and a 24 MHz frequency for the native I/O controller.

Real-Time Clock (RTC): The RTC function is IBM PC compatible. It uses 64-Bytes of user NVRAM (including 14-Bytes for clock function), 4 KB NVSRAM and is connected to the X bus which is a buffered 8-bit subset of the ISA bus.

Keyboard/Mouse Controller: This component contains the keyboard and mouse control subsystem and is connected to the X bus which is a buffered 8-bit subset of the ISA bus.

3.1.1.8 Native I/O Controller

This component supports the floppy controller, two serial ports that use FIFO, First In First Out, and can decode four COM port, one parallel port, and the IDE interface.

3.1.1.9 Business Audio

Enhanced business audio is provided through the Crystal Semiconductor CS4232 audio code. The CS4232 is a single chip multimedia audio subsystem controller, that provides compatibility with business audio, and compatibility with Sound Blaster/Sound Blaster Pro audio subsystems. The CS4232 supports OPL3 FM synthesis by providing an interface to the Yamaha YMF289B FM synthesizer and the YAC516E DAC.

Conventional, Timer 2, PC speaker functions are also provided. Both the Timer 2 signal from the PCI-ISA bridge chip, and the audio chip, drive the speaker. All capture and playback functions are performed through this chip.

The system provides stereo capture and playback. It can play MIDI files, and supports a full-function MIDI system. It has separate DMA channels for recording and playback. The system is processor driven and does not include a Digital Signal Processor (DSP). The DSP functions can be implemented through software. Compression and decompression is

supported in hardware. The audio output is to a single speaker mounted in the system unit. Also supported, are four rear-mounted 3.5 mm jacks for the following:

- Stereo earphones
- Stereo microphone input
- Stereo line-in
- Stereo line-out

There is also a system board mounted connector for direct playback from the CD-ROM.

Timer 2 Audio support: The Timer 2 signal along with both channels of the multimedia audio chip output, is fed into the operational amplifier and booster stage that drives the speaker. This provides the capability of supporting standard Soundblaster16 compatible audio on the system board, thus eliminating the need for a dedicated add-on audio card. All Personal Computer Power Series 830 and 850 configurations include multimedia audio. The software may select to directly drive Timer 2 audio or to emulate Timer 2 audio through the multimedia audio chip.

3.1.1.10 Upgrade Processor Socket

A socket is provided on the system board in which a future upgrade processor may be installed. The upgrade processor socket of the Personal Computer Power Series 830 and 850 is an 288 Pin Grid Array (PGA) Zero Insertion Force (ZIF) socket, targeted for the future PowerPC 604+ processor.

The PowerPC 604 processor bus signals and various control signals such as the upgrade presence detect signal are wired to the socket. The upgrade socket requires +3.3 volt and +2.5 volt. A voltage regulator card that plugs into the Personal Computer Power Series 830 and 850 system board provides the +2.5 volt supply which must accompany any PowerPC 604+ upgrade processor.

3.1.2 IBM ThinkPad Power Series System Board

The basic hardware of the IBM ThinkPad Power Series 820 and 850 consists of the system unit, an external 3.5 inch floppy disk drive, and an AC adapter. The system unit consists of the upper display unit and the lower base unit. The display unit contains a color liquid crystal display and its inverter circuitry. The lower base unit contains the system board set, keyboard, speakers, microphone, SCSI hard disk drive pack and CD-ROM drive, DC voltage converter, and a nickel-metal-hydrate battery pack.

The set of boards contains most of the electronics. It includes the mother board, CPU board, video card, audio card(s), and memory card. Figure 14 shows the layout of the system board for the IBM ThinkPad Power Series systems 820 and 850. The major subsystems are located on secondary system boards that connect to the internal 32-bit PCI bus and the 5 volt supply distributed by the main system board.

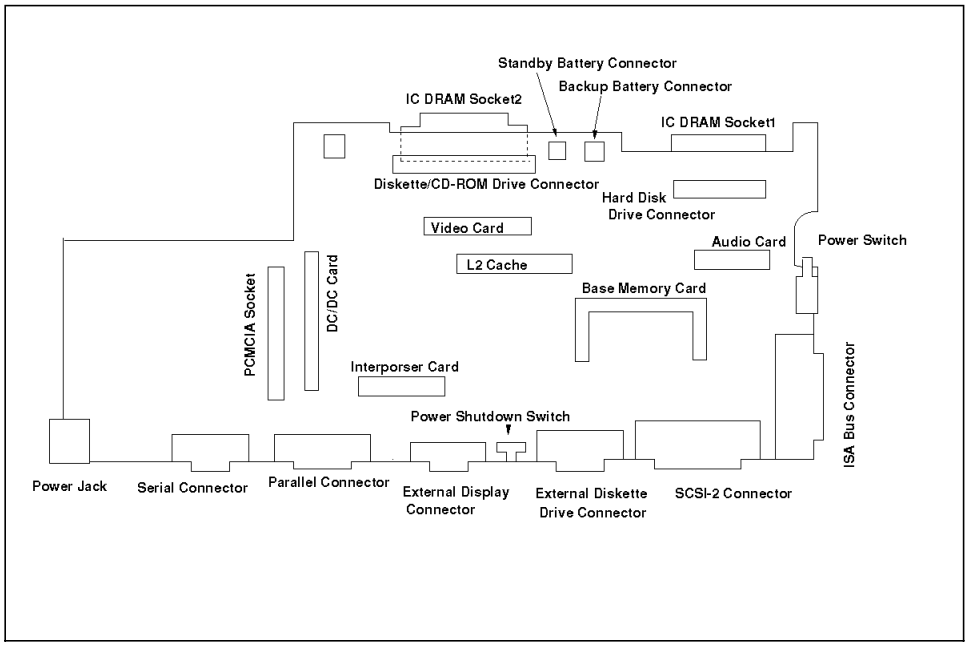

Figure 14. System Board Block Diagram of the IBM ThinkPad Power Series 850

3.1.2.1 Memory Subsystem

The system memory is composed of base memory and optional upgradable memory. The system board has three sockets for the JEDEC 72 pin Small Out line Dual In line Memory Module (SODIMM). For base system memory, either a 4 MB or a 16 MB DIMM is used. For optional memory, 4 MB and 16 MB DIMM cards are supported in each socket.

Both base and optional memory is 32-bit / 5 volt memory. On the ThinkPad Power Series 820 and 850, both parity and non-parity memory is supported.

3.1.2.2 Second Level (L2) Cache

The ThinkPad Power Series systems 820 and 850 support a 256 KB level 2 (L2) cache installed on the PowerPC 603e system bus. This cache supports burst read-hit transfer, burst write-hit transfer, and one-burst write invalidation. A least recent used (LRU) algorithm is supported for each set of two power down modes.

Table 6 shows a summary of the L2 cache characteristics of the ThinkPad Power Series.

Table 6. L2 Cache on ThinkPad Power Series

Characteristics	**Model 6040 (TP 820)**	**Model 6042 (TP 850)**
Total size	256 KB	256 KB
Line Width	32 KB	32 KB
Physical Bus Width	4-byte	8-byte
Set Associativity	2-way	Direct Mapped
Write Mode	Write-Through	Write-Back
Type Hit Cycles	3-1-1-1-1-1-1-1	3-1-1-1
Clock Speed	33MHz	66MHz

3.1.2.3 Host-to-PCI Bridge/Memory Controller

The IBM ThinkPad Power Series 820 and 850 uses a Host-to-PCI Bridge/Memory controller, that bridges between the PowerPC 603e processor system memory and PCI bus.

3.1.2.4 SCSI Controller

This 8-bit SCSI-2 controller supports 32-bit word data burst transfers with variable burst length as a PCI master device. This high level SCSI processor requires very little CPU overhead for its operation. A 50 pin single ended SCSI connector is available. On this bus, the hard disk drive pack and CD-ROM drive are connected. The bus supports data transfer speed of up to 5 MBps in asynchronous and 10 MBps in synchronous mode.

3.1.2.5 Flash ROM

The 512KB Flash ROM contains the Power-On Self Test (POST) and resident diagnostic code.

3.1.2.6 Video Graphics Controller

The video graphics controller is connected to the PCI bus through the PCI-to-VL bus bridge. The graphics controller provides limited bit block transfers, line drawing, and hardware cursor as well as VGA functions.

The video graphics controller has a digital-to-analog converter for external CRT monitors using a 15-pin D-sub connector.

A liquid crystal display is the standard display device for the IBM ThinkPad Power Series 820 and 850. The thin film transistor (TFT) color LCD has active matrix arrays for up to 256 k colors or shades. The LCD display supports 640 x 480 or 800 x 600 resolutions (depending on the model).

Please refer to the 3.6, “Video Subsystem” on page 101 for more details.

3.1.2.7 Video Capture Controller

The video capture controller supports 331,766-word x 16-bit from memory for storing motion video data. The controller receives video-in data through an ITU 601 YCrCb 4:2:2 interface and generates 18-bit analog VGA signals and encoded NTSC signals in the analog-to-digital converter, and 18-bit graphics data for LCD displays.

Video Digitizer: The Analog-to-Digital Video Signal Converter converts NTSC and PAL video signals to ITU 601 YCrCb 4:2:2 digital video, and feeds the data to the Video Capture Controller. The Analog-to-Digital Video Signal Converter is mounted on the video capture card.

3.1.2.8 PCI-ISA Bridge

This chip bridges the ISA and PCI bus, and provides the system control service, DMA, timer, interrupt controller, and system control ports.

The BIOS Timer address range is relocated to avoid conflict with the EEPROM, which resides in ISA address range 0078h through 007Ch. The PCI bus arbitration is achieved by the power management controller, and not by the PCI-ISA bridge.

3.1.2.9 Native I/O Controller

This controller supports external floppy disk, two serial ports and one parallel port.

3.1.2.10 Extended I/O Controller

The ThinkPad Power Series 820 and 850 use a custom designed controller that supports variable I/O functions. Most of the system control registers are contained in this controller.

An IBM Personal System/2 (PS/2) compatible auxiliary device controller provides two channels of serial interface, one for alphanumeric devices, and one for pointing devices. The serial interface for the keyboard controller in the Universal Micro Control Unit (UMCU) is logically equivalent to a 84, 85, or 89-key space-saving keyboard. The UMCU has an additional serial interface for external alphanumeric devices. The UMCU controls the nickel metal hydrate battery pack.

The serial interface for pointing devices is connected to both the built-in pointing stick and the external pointing devices. A keyboard and mouse port provides serial interfaces for external alphanumeric devices and pointing devices.

The extended I/O controller supports a EEPROM (64 word x 16) for storing security passwords, vital product data, and some configuration information.

Real-Time Clock: This ISA device has a real-time clock in a 128-byte CMOS address space and in a 8 KB NVRAM space.

3.1.2.11 Business Audio

This ISA device is located on an audio card and can be an ISA bus master for audio data transfers. It has separate DMA channels for record and playback, micro-law, A-law, and ADPCM compressions and decompressions are supported in the hardware.

The audio subsystem includes the following 3.5mm jacks:

- Stereo headphone output
- Stereo microphone input
- Alternative audio I/O (monaural)

In addition to the above audio jacks, the audio card supports conventional PC speaker functions, UMCU beeps, PCMCIA audio, and CD audio functions.

3.1.2.12 PC Card Interface Controller

The PCMCIA sockets are implemented by the PCMCIA-ISA bridge on IBM ThinkPad Power Series 820 and 850. The two sockets are compatible to the PCMCIA 2.0 standard. Each socket can accommodate a type-1 or type-2 card. Only one type-3 card can be supported at a time. The socks can provide +5 volt and +12 volt, and support +5 volt signal interface.

3.1.2.13 Expansion Port

A 120-pin connector is located on the side of the system bus unit to allow an ISA Expansion Station to be attached. Through this connector, ISA-compatible signals and some additional control signals are provided.

3.2 Bus Architecture

This section provides on overview of the history of the PC bus and the current position of the ISA, PCI and PCMCIA bus. Other buses like Micro Channel Architecture (MCA) or Extended Industry Standard Architecture (EISA) that could be used with modifications in a PowerPC Reference Platform specification compliant system are not discussed.

The PowerPC Reference Platform Specifications, Version 1.1, recommends that systems implementing an expansion bus should use Peripheral Component Interconnect (PCI), PC Memory Card International Association (PCMCIA) and/or Industry Standard Architecture (ISA) buses. It is very likely that many PowerPC Reference Platform specification compliant systems will support all three buses.

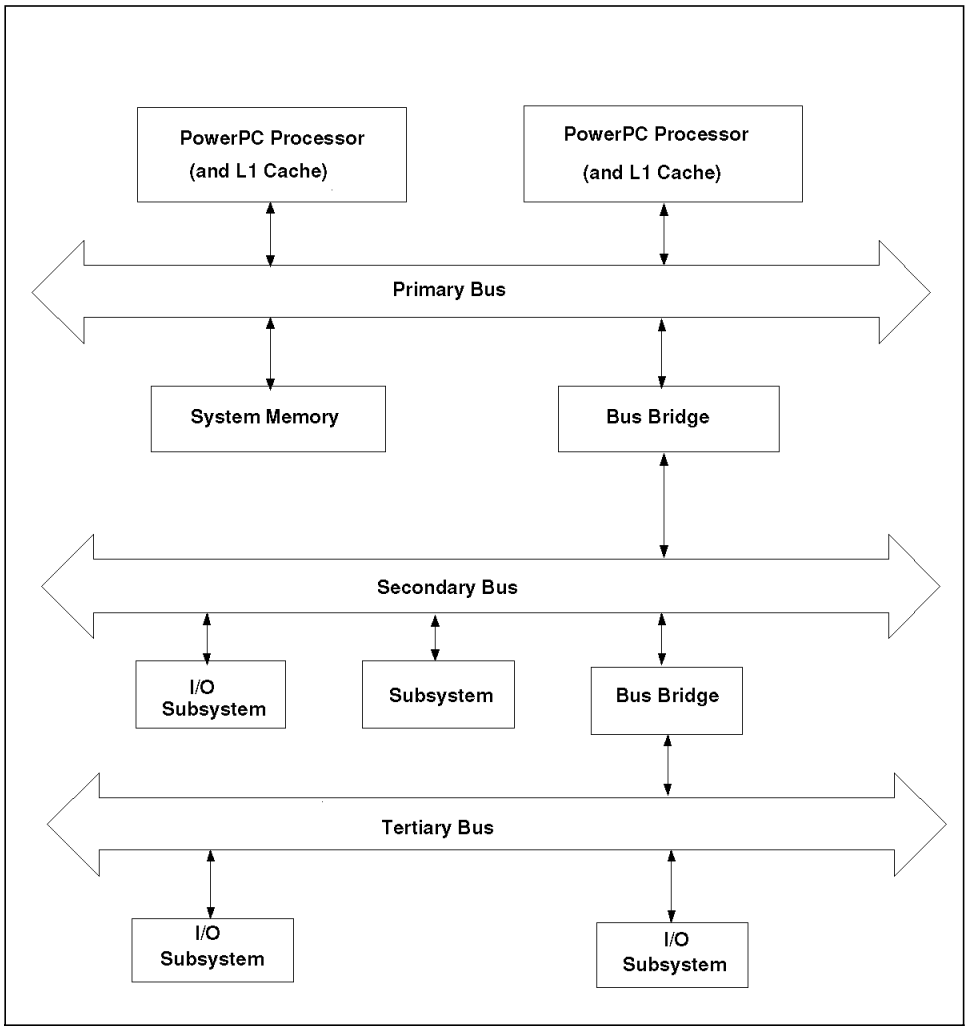

Figure 15. Standard PowerPC Reference Platform Specification Bus Topology

Figure 15 shows a typical system topology used in PowerPC Reference Platform compliant systems. All such systems consist of one or more PowerPC processors, volatile memory separate from the other subsystems used to store data and instructions called system memory, and a number of objects called I/O subsystems that may initiate transactions from and to system memory. The processors are linked over the primary bus. to each other, to system memory and to a bus bridge. In general, I/O devices do not connect directly to the PowerPC primary bus. The bus bridge connects to a secondary bus which has I/O subsystems connected to it. In turn, another bus bridge may be employed to a tertiary bus.

There may be variations of this typical topology. The secondary bus may be implemented as two or more parallel expansion buses. The bus bridge and/or memory controller may be integrated into the processor chip.

3.2.1 Bus History

The general purpose expansion bus has always been an integral part of the design of a personal computer. It is used to give a system its unique personality. The purpose of the expansion bus is simple, it provides a high-speed connection between the Central Processing Unit (CPU) and internal peripherals like memory or expansion boards.

Although all computer buses are designed to achieve the same purpose, the variation in rules that govern buses, controls how well this goal is achieved. The general goal in the evolution of bus designs has been to put as much information as possible across the lines in as little time as possible. The dramatic advances in microprocessor technology over the past few years have enabled Personal Computer′s (PC) to achieve a much higher level of performance and functionality. This and the very strong competition in the PC market has lead to many different bus architectures, (for example PCI, MCA, EISA).

3.2.2 The Industry Standard Architecture Bus

Early personal computer designs had very simple bus architectures, see Figure 16 on page 60. The bus operated at the same frequency as the CPU and had the same number of address and data lines and also the same basic signals. The system interface, which consisted of the actual connection lines between the processor and the expansion boards, was directly connected to each slot. Each slot was given a particular address location. Any access from the operating system had to be sent to the address of the particular slot. This technique made configuration very difficult because the operating system had no convenient way to find out which card was installed in which slot. Cards usually had dip switches or jumpers to set the card′s address, interrupts and DMA channels. All of this made it very difficult for the user to configure the system, often resulting in interrupt conflicts or other difficulties.

In 1984 IBM engineers designed a new bus based on the Intel 80286 microprocessor. Because the 80286 used a full 16-bit data bus, IBM added more data and address signals to the PC bus to match the capabilities of the new and more powerful microprocessor. For the IBM Personal Computer AT this bus ran at 8 MHz and had 16 data and 24 address lines. The AT bu was developed with the envision of higher frequency microprocessors and with a provision for allowing the microprocessor and the I/O bus to run a different

frequencies. With the advent of clones of IBM's PC, the industry realized the need to standardize the specifications for the bus slots. IBM's bus architecture was thus adopted as the Industry Standard Architecture (ISA). The first bus was designed to send 8-bits at a time, thus the bus was named the 8-bit ISA bus. With the appearance of the IBM Personal Computer AT, the bus was capable of passing 16-bits at one time. Thus the new standard was named the 16 bit ISA bus, sometimes referred to as the AT bus. Originally, there where no official definitions or specifications for it. But later on, its specifications where defined by the Institute of Electrical and Electronics Engineers (IEEE) standards group. This IEEE definition is used to implement the ISA bus for PowerPC Reference Platform specification compliant systems.

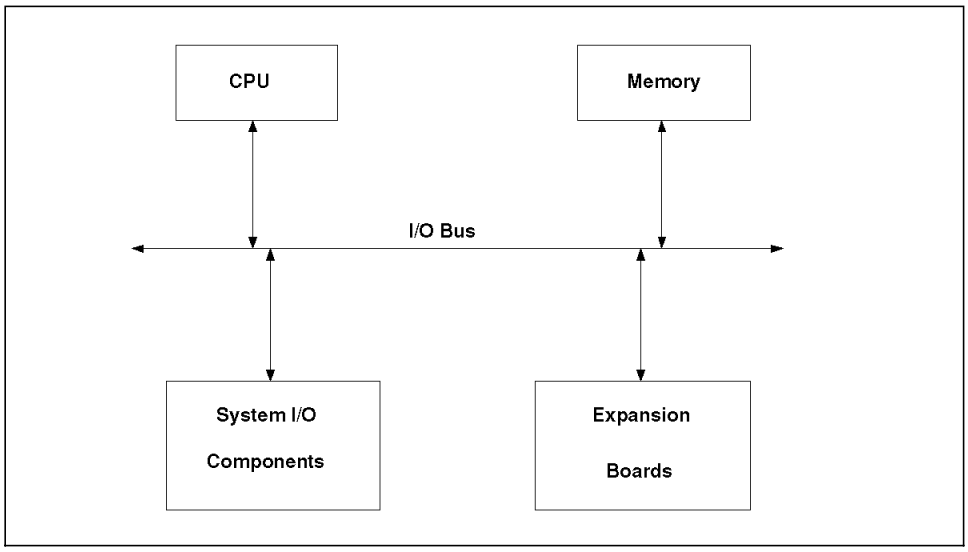

Figure 16. Traditional Bus Architecture

As processors and memory became faster, the need for faster access to system memory than what the AT bus could provide, became apparent, thus the local bus was invented.

3.2.3 Local Bus Architecture

The term local bus generally refers to the electrical pathway which connects the component of the processor-memory subsystem (for example, the CPU, the system memory, the memory controller, the L2 cache and its controller). It is defined as a bus directly connected to the CPU. Figure 17 on page 61 shows a simplified diagram of these relationships. Local bus architectures are designed on adding to, rather than replacing, the conventional expansion

buses. It therefore coexists with ISA, Micro Channel or EISA bus architectures.

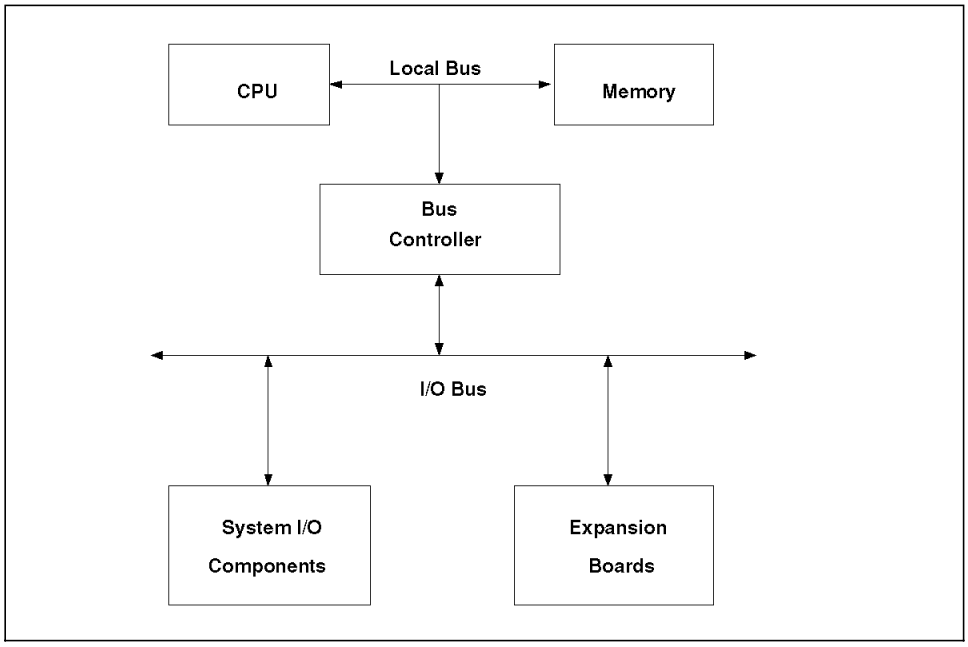

Figure 17. Local Bus Architecture

The main purpose of a local bus is performance. The big advantage of the local bus compared to the ISA bus is the capability to run options and adapters at the CPU's external speed and is not bound to the slower speeds of the expansion bus. This is especially important for graphics devices. The system microprocessor is in charge of most of the graphics manipulation tasks. As a result, performance gains for local bus graphics were significant.

However, the early local bus design had a number of problems. Each manufacturer had their own proprietary version. Microprocessor of different frequencies often required a unique version of a local bus or modifications to local bus components. Extensive compatibility testing was a necessity. In addition, there were no clear upgrade path for these local bus components since there where no expansion slots available on the local bus.

The dramatic advances in microprocessor technology over the past few years, like the PowerPC microprocessor, have enabled PCs to achieve much higher levels of performance and functionality. Compute intensive applications such as real-time video or on line transaction processing

requires that vast amounts of data be moved between the CPU and the peripheral components. Thus, the need for much faster buses.

3.2.3.1 The PCI Bus

PCI is an advanced high-performance local bus that supports multiple peripheral devices. It was originally proposed by Intel Corporation′s Architecture Lab in late 1991. The specification has become very popular in a short period of time. In the second part of 1992, Intel, IBM, and other leading companies formed the PCI Special Interest Group (SIG) to promote and enhance the PCI as an open, non-proprietary local bus standard. The PCI bus is not tied to the Intel family of microprocessors and is suitable for attachment to diverse hardware platforms like the PowerPC or other RISC processors.

The PCI bus is not a local bus at all, although it is generally referred to as one. It is a so called, mezzanine bus. Mezzanine is a term used to describe an intermediate level. As a result of this design concept, the PCI bus is effectively isolated from the processor memory bus, as shown in Figure 18 on page 63. The concept also enables the processor memory bus to operate concurrently with the PCI bus.

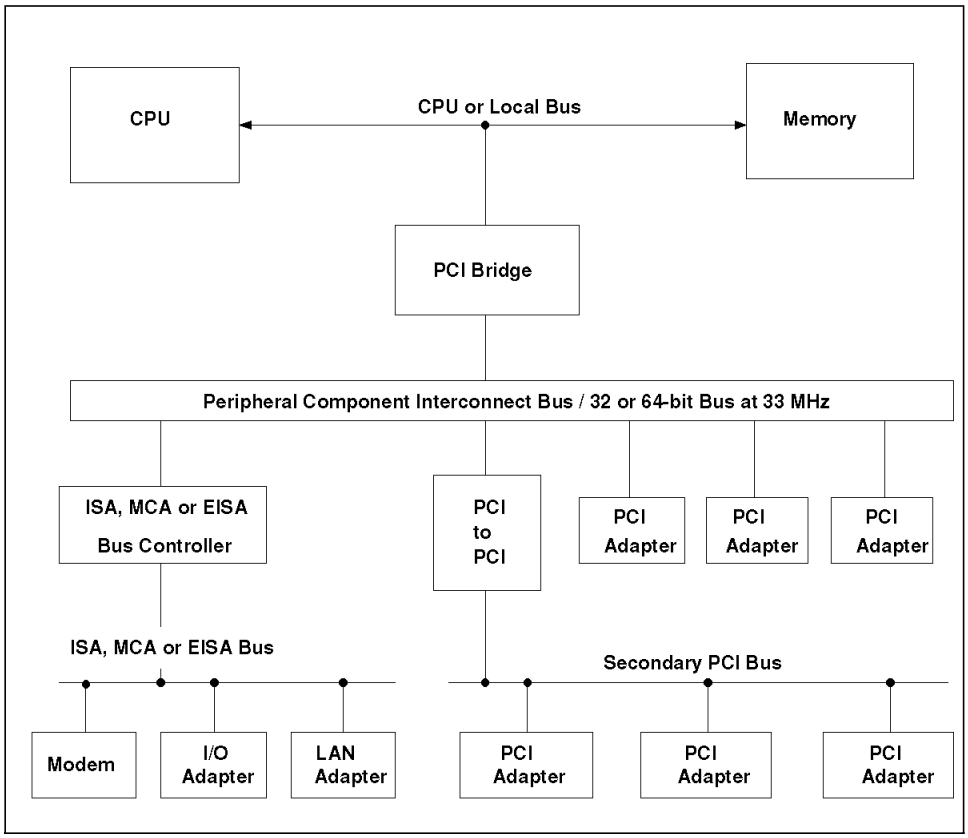

Figure 18. Typical PCI Local Bus Architecture

The PCI local bus specification offers the following key benefits:

- Performance:
  - Linear burst - 132 MBps data transfer
  - Low access latency, bus mastering and concurrency
  - Multimedia ready
- Power:
  - Processor independence
  - Multiplexed 64-bit data and addressbus
- Plug and Play:
  - Auto-configuration
  - Compatibility with ISA,EISA and Micro Channel

The PCI bus was not intended to replace existing expansion buses. In fact, it can coexist with a number of other buses like the Micro Channel, ISA or EISA bus. Another advantage incorporated into the PCI bus is its provision for automatic configuration. When a peripheral is added, configuration software selects an unused interrupt to ensure that no conflicts will occur when installing multiple add-in boards. A real benefit to add-in card manufacturer is that the PCI cards are smaller and less expensive to produce. Although every system has a limited number of slots, the PCI specification allows system manufacturer to design shared slots. that can accommodate both a PCI and a Micro Channel, ISA or EISA card connector. Due to its huge capabilities the PCI bus will be the most widely used bus in PowerPC systems. For a summary of the PCI specifications see Table 7 on page 68.

3.2.3.2 The PCMCIA Bus

PCMCIA cards are a new standard for credit card size peripherals and are becoming a standard feature in portable as well as desktop systems. The PC card is approximately 2 inches wide by 3.5 inches long. The thickness varies from about 1/8 inch thick to 1 1/2 inches, depending on the type of the card.

PCMCIA History

The Personal Computer Memory Card International Association (PCMCIA) was founded in 1989. PCMCIA produced a standard called the PC card standard. It defines the physical requirements, electrical specifications, and the software architecture for the 68-pin cards and their sockets. Release 1.0 of the standard was introduced in 1990 and supported only memory operations. This standard was identical to that of the Japan Electronic Industry Development Association (JEIDA) 4.0 standard. PCMCIA Release 2.0, defined in 1991 was a major update and included full support for I/O devices. Release 2.0 is identical to JEIDA 4.1. Release 2.1 of the PC card standard was completed in mid 1993. It incorporates all the improvements since Release 2.0.

The following are current PCMCIA standards:

- PC Card Standard Specifications Release 2.1.
- Socket Services Specifications Release 2.1.
- Card Services Specifications Release 2.1.
- PC Card ATA Mass Storage Specifications Release 2.1. [1]
- AIMS Specifications Release 1.01. [2]

Note:

1 The ATA Mass Storage Specification defines the requirements for the disk on card for PCMCIA.

2 The AIMS Standard allows a PC to access memory on a PC Card.

Figure 19 shows the relationship between the different portions of the PC Card Release 2.1 standard.

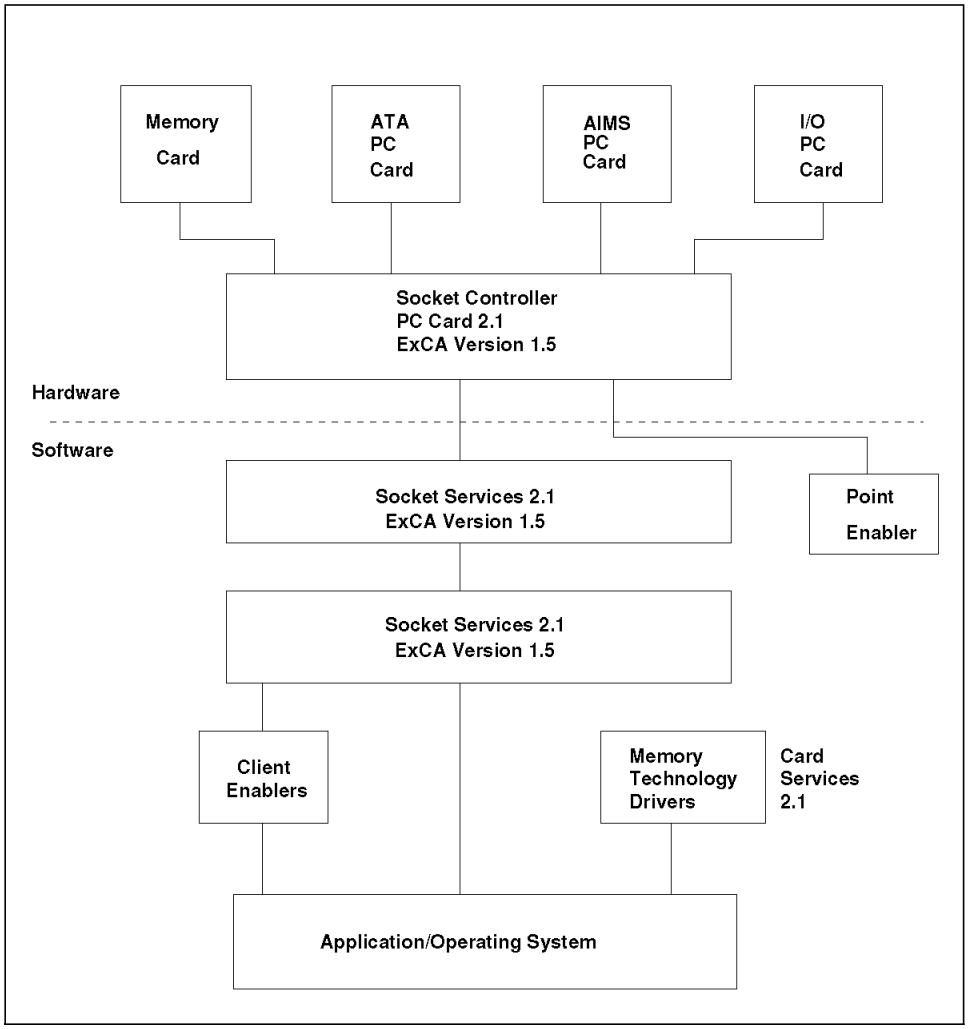

Figure 19. PCMCIA Components

PCMCIA Architecture

Socket Controller: Referred to as the PC Card Adapter, is the interface between the system bus and the PC card controller. It is the integrated circuitry that interfaces to one or more 68-pin PC card sockets. To prevent incompatibility of some manufacturers implementation of the PCMCIA standard, Intel defined the Exchangeable Card Architecture (ExCA). This architecture defines a minimum set of requirements for the socket controller.

The PCMCIA software architecture has the following two key elements:

- Socket services
- Card services

Socket Services: A hardware-dependent layer between the hardware and the software. Socket services masks the sockets actual hardware implementation, allowing higher-level software to be developed which is able to control and utilize PCMCIA cards without knowledge of the actual hardware interface. Depending on the number of socket controllers, socket services may be implemented more than once at any given time but may only be implemented once per socket controller. Socket services may be either ROM or driver based. If the system is booted from the PC card, then ROM based is a requirement. But most commonly, socket services is a driver loaded via CONFIG.SYS.

Card Services: A software layer that sits above the socket services. Card services manages access among the cards, the sockets, and system resources, such as interrupts and memory map. Card services accesses cards via socket services. The card drivers interact with the cards via card services. Card services is generally operating system dependent and loaded as a device driver via CONFIG.SYS. There may be only one card services implemented in a host system at any one time.

As shown in Figure 19 on page 65 there are other device drivers defined in the PCMCIA release 2.1 standard: point enabler and client enabler.

Point Enabler: A hardware driver written specifically to the PCMCIA socket controller or the adapter chip, much like the early PC days when applications wrote directly to the hardware. This means that a card would have to ship with multiple point enablers, one for each PCMCIA Socket Controller (Intel, Toshiba, or others). Point enablers may suffice for systems running only one PC card. They use less memory but they prevent using all of the PCMCIA advantages.

Client Enablers: PCMCIA compatible device drivers. They expect to have card services installed and will interact with it. Super client enabler is a device driver that enables many PC card to work in multiple systems. It makes PCMCIA cards, like modems or LAN cards, to appear as their ISA bus counterparts.

For maximum compatibility and interoperability, the socket services should be provided by the hardware vendor and the software vendor should provide the card services extensions. For PowerPC Reference Platform compliant systems, both socket services and card services should be provided in the systems abstraction layer.

PCMCIA Cards

The centerpiece of the PCMCIA architecture is the PC card itself. The PC cards's physical characteristics are defined in the card physical section of the specification. There are three standard types of PC cards: Type I, II and III. Type I is the most basic and Type III the most complex.

The standard form factor of a PC card is 54 mm (2.126 inches) width and 85.6 mm (3.370 inches) in length. All PC card types must maintain these two dimensions. The height varies with the type of the card.

Type I compatible cards are 3.3 mm (0.130 inches) thick and use a 34-pin connector. This cards are typically non-volatile memory cards made of static RAM or flash RAM. This is the smallest type of card and is the minimum to fulfill PC card compatibility.

Type II compatible cards are 5 mm (0.197 inches) thick and use a 68-pin connector. These are the cards that are currently most commonly available. They come as LAN adapters (including wireless LAN adapters), SCSI adapters, terminal emulators, modems and fax-modems.

Type III compatible cards are 10.5 mm (0.413 inches) thick and use a 68-pin connector. This is the same connector size as for Type II cards but allows for more height. Type III cards are mainly used for 1.8-inch drives.

3.2.4 Bus Comparison

Table 7 shows a comparison between the different expansion buses.

Table 7 (Page 1 of 2). Bus Comparison

Type of Bus	**ISA**	**EISA**	**MCA**	**PCMCIA 2.1**	**PCI 2.0**
Data bus (bits)	16	16/32	32/64 [1]	16/32	32 [2]
Address bus (bits)	24	24/32	32 [1]		32 [2]
Bus clock (MHz)	8.33	8.33	10		33
Max. burst throughput (MBps)	8	33	80 [3]		132
Interrupt	11	11	16		4
Busmaster support	1 only	Yes	Yes	No	Yes
DMA channels	7	7	15		Bus master

Table 7 (Page 2 of 2). Bus Comparison

Type of Bus	ISA	EISA	MCA	PCMCIA 2.1	PCI 2.0
Concurrent CPU/bus operation	Rarely	Possible	Yes	No	Yes
Auto configuration	No	Only EISA	Yes	Yes	Yes
Power-on insertion	No	No	No	Yes [4]	No
Busmaster support	1 only	No	Yes	No	Yes

Note:

[1] Data is sent over 64 lines, 32 data lines, and 32 multiplexed lines.

[2] Address and data lines are multiplexed using the same lines.

[3] Data streaming mode.

[4] Plug and play.

3.2.5 IBM PC Power Series Bus Implementation

Following is a description of the expansion buses used in the IBM PC Power Series.

3.2.5.1 Personal Computer Power Series Series 830 and 850

These systems have the following expansion buses implemented:

- System bus
- PCI bus
- ISA bus
- X bus

3.2.5.2 The System Bus

The system bus connects the following components together:

- PowerPC 604 processor
- Processor upgrade socket
- L2 cache
- PCI/Memory bridge controller
- Memory subsystem (through a buffer)

The PowerPC 604 processor in the Personal Computer Power Series systems runs at 100 MHz, 120 MHz, or 133 MHz respectively, depending on the system model.

The system bus has 32 address lines, plus 4 parity lines, and 64 data lines (plus 8 parity lines).

The PowerPC 604 processor has a level 1 (L1) cache integrated. The L1 cache is split into separate instruction and data caches. Both the instruction cache and the data cache contain 16 KB four way set associative data arrays organized as 32-byte cache lines with no sectoring.

3.2.5.3 The PCI Bus

A Motorola MPC105 Eagle chip provides the interface between the system bus and the PCI bus. For a detailed description of this chip see 3.1, “IBM Personal Computer and ThinkPad Power Series System Boards” on page 45.

The PCI bus is a 32-bit bus that adheres to the PCI 2.0 specification. In systems with a 120 MHz processor, the PCI bus runs at 30 MHz. In systems with 100 and 133 MHz processor the PCI bus runs at 33 MHz. The PCI bus is processor independent, supports peer-to-peer and bus master protocols.

The following components are connected to the PCI bus:

- Video subsystem
- PCI-based Ethernet chip
- Riser card interface that provides for two PCI slots, plus three ISA bus slots which are connected to the ISA bus (two more ISA slots are available on the model 850 that are shared with the PCI slots
- PCI/ISA bridge chip

3.2.5.4 The ISA Bus

The PCI to ISA bus bridge chip, the IBM FireCoral chip, connects the PCI bus to the ISA bus where the native I/O devices and the ISA slots reside. For a more detailed description of the PCI/ISA bridge chip, see 3.1, “IBM Personal Computer and ThinkPad Power Series System Boards” on page 45.

The ISA bus has 24 address lines and supports 8-bit and 16-bit ISA devices. The following components are connected directly to the ISA bus:

- Business Audio subsystem see 3.1.1.9, “Business Audio” on page 50 for more details

- Riser card interface which provides for three ISA slots, plus two PCI slots which are connected to the PCI bus
- Common I/O controller which supports a diskette drive, two serial ports and one parallel port
- X bus

3.2.5.5 The X Bus

The X bus is a buffered 8-bit subset of the ISA bus. It is used to interface with peripheral devices, like the flash ROM and keyboard/mouse controller, that do not require a high speed interface.

Table 8 shows the specifications for the system bus, the PCI bus, and the ISA bus in the Personal Computer Power Series systems.

Table 8. Personal Computer Power Series Bus Specifications

Processor speed (MHz)		**100**	**120**	**133**
System bus	Bus speed (MHz)	66	60	66
	Address width (bit)	32	32	32
	Data width (bit)	64	64	64
PCI bus	Bus speed (MHz)	33	30	33
	Address width (bit)	32	32	32
	Data width (bit)	32	32	32
ISA bus	Bus speed (MHz)	8.33	7.5	8.33
	Address width (bit)	24	24	24
Data width (bit)		16	16	16

3.2.5.6 ThinkPad Power Series 820 and 850

The ThinkPad Power Series have the following buses implemented:

- System bus
- Memory bus
- PCI bus
- ISA bus
- PCMCIA bus

The PowerPC 603e processor runs at 100 MHz. It has a level 1 (L1) cache incorporated, which is divided into a 16 KB instruction cache and a 16 KB data cache.

A 256 KB level 2 (L2) cache is located on the system bus. For details of the L2 cache see Table 6 on page 53.

The ThinkPad Power Series 820 has a 32-bit memory bus; the ThinkPad Power Series 850 has a 64-bit memory bus.

The PCI bus is a +5.0V 32-bit bus and adheres to the PCI V2.0 specifications. It runs at 33 MHz. The following major subsystems are connected to the PCI bus:

- Host-to-PCI bridge/memory controller
- PCI-to-ISA bridge controller
- SCSI controller
- Graphics video controller
- Video capture controller
- Power management controller

The Host-to-PCI bridge/memory controller (IBM IDAHO) physically stands between three buses:

- PowerPC 603e system bus
- Memory bus
- PCI bus

The system memory logically resides on the system bus, but is physically connected to the memory bus. The 32-bit PCI bus is connected to PCI I/O and PCI memory.

The Host-to-PCI Bridge/Memory controller routes transfers, translates bus cycles and translates addresses among those buses. Some of the PCI bus cycles flow through lower buses such as ISA and PCMCIA.

A PCI-to-ISA bridge controller (Intel SIO 82378ZB) bridges between the PCI bus and the ISA bus.

Located on the internal ISA bus are the native I/O controller, the extended I/O controller, real-time clock, business audio, and the PCMCIA bus.

ISA bus master cycles are initialized by an ISA bus master device, which may be installed in the ISA expansion station behind the expansion connector. The DMA cycles are controlled by the DMA controller logic inside the PCI-to-ISA bridge. In both cycles, only the system memory can be the target destination.

The PCMCIA-ISA bridge controller connects the PCMCIA sockets to the ISA bus. The PC card interface controller (Ricoh RF53C366L) logically resides on the ISA bus. The two sockets are compatible to the PCMCIA 2.0 standard. The PCMCIA subsystem has two types of interrupts. An I/O card interrupt is the one that the PC cards generate operationally. The PC card interface controller (PCIC) supports a status change interrupt, which indicates status transitions such as card insertion and removal. The PCIC can map both types of interrupt requests into IRQ channels. This is done by manipulating PCIC registers. The PCIC in conjunction with PC cards, may generate status change interrupts to indicate status transactions including the following:

- Card removal
- Card insertion
- Card busy to ready transition
- Battery warning conditions
- Battery dead conditions
- GPI (General Purpose Input) transitions

Table 9 on page 74 shows the bus specifications for the ThinkPad Power Series systems..

Table 9. ThinkPad Power Series Bus Specifications			
Model		**820**	**850**
System bus	Bus speed (MHz)	33	67
	Address width (bit)	32	32
	Data width (bit)	32	64
PCI bus	Bus speed (MHz)	33	33
	Address width (bit)	32	32
	Data width (bit)	32	32

3.3 Memory Subsystem

Due to the different architecture of the Personal Computer Power Series systems and the ThinkPad Power Series systems the memory subsystem has different implementations and therefore different memory modules must be used.

This section will discuss how the memory subsystem is implemented in the PC Power Series systems and what memory modules are supported.

Each system has a certain amount of memory pre-installed. It can be expanded by the end user to a system specific maximum in order to optimize the system throughput for the application environment. For maximum data integrity, all PC Power Series systems support parity memory. Following is a short description of how parity is implemented in memory modules.

Parity is implemented in memory hardware by adding another bit called a parity bit to each data byte. In addition, logic is needed to encode and decode the meaning of the parity bit. Parity implies equality, and with memory, involves the introduction of an extra bit to make the sum off all bits in a byte equal even or odd. This simple parity implementation allows your computer to detect single bit memory errors. Since single bits are the predominant memory failure modes, parity checking provides a much higher data integrity. However, parity is not free.

- The cost, is the need for an added bit for each bytes of data. Typically, this equates to about 10 percent more memory bits.
- Parity will not detect two failing bits within a byte. Parity can detect 100 percent of one bit errors. Since greater than 90 percent of all memory errors affect only one bit, parity provides very effective error detection coverage.
- Parity provides only error detection, it does not allow error correction. Error correction can be accomplished by error correction code (ECC), a technique commonly used in mainframes and PC servers. PowerPC series system do not support ECC.

3.3.1 Personal Computer Power Series System 830 and 850

The following types of memory are used in the Personal Computer Power Series systems:

- Flash programmable read-only memory (Flash-EEPROM)
- Dynamic random access memory (DRAM)

The system board is designed to hold a maximum of 1 MB Flash-EEPROM. The base 512 KB is soldered onto the planar and the second 512 KB is socketed so that it can be optionally installed if needed. Flash-EEPROM holds the power-on-self-test (POST) and boot code as well as the vital product data (VPD). VPD is a software system identification that holds information such as the planar speed, system serial number, and the like.

DRAM is the main memory used in almost all computers. Memory modules are used to expand DRAM. Single In-line Memory Modules (SIMM) or Double In-Line Memory Modules (DIMM) are mounted on small printed circuit boards with either a 30-pin, 72-pin, or 168-pin card edge connector.

The PC Power Series 830 and 850 systems have the memory controller integrated into the PCI Bus/Memory-Controller (PCIB/MC) chip.

The memory controller has the following features:

- Burst or single beat access from CPU and the PCI bus
- Timing support for 70ns DRAM
- Write buffering and read prefetch for PCI master access
- Supports mixed types of SIMMs (same type per SIMM pair is required)
- Empty SIMM sockets support
- Non-interleaved memory access operations

These systems supports up to 192 MB of system memory on six SIMM sockets. A minimum of 8 MB of memory must be installed. Each socket can support a 4 MB, 8 MB, 16 MB or 32 MB of 70 ns parity SIMM card. The sockets may be populated with different SIMMs, for example two 4 MB SIMMs and two 8 MB SIMMS. The DRAM subsystem is 72-bits wide, (64 data bits and 8 parity bits). Since each SIMM is 36-bits wide, SIMMs must be installed in pairs to have a 72-bit data/parity bus. A parity bit is generated for each byte of data written. During a read operation the parity bit is checked for each byte of data.

The systems have two sockets populated with memory. The other four sockets are empty and can be used to upgrade the amount of memory.

3.3.2 ThinkPad Power Series 820 and 850 Systems

The Host-to-PCI Bridge/Memory Controller contains the memory controller block. It supports system memory with parity bits only.

Thinkpad Power Series systems implement a 32-bit memory bus architecture, and have a standard 256 KB level two (L2) cache. The system memory is composed of base memory and optional upgradable memory.

The Personal Computer and ThinkPad Power Series 820 and Personal Computer and ThinkPad Power Series 850 systems have a different memory subsystem.

The Personal Computer and ThinkPad Power Series 820 systems have three sockets for the JEDEC 72-pin Small Out-line Dual In-line Memory Module (SODIMM) on the system board. Depending on the model type, one or two sockets are occupied by 16 MB SODIMM cards as standard configuration. Additional 8 MB or 16 MB SODIMM cards can be installed for a total of 48 MB of system memory.

The Personal Computer and ThinkPad Power Series 850 systems have 16 MB or 32 MB pre-installed on the system board, depending on the model type. It can be expanded up to a maximum of 80 MB or 96 MB, depending on the model type. This can be achieved by installing different capacities of SODIMM and IC DRAM cards into the DIMM and IC DRAM card sockets on the system board.

The system has two DIMM card sockets on the system board. The sockets support either 16 MB (8 MB + 8 MB) or 32 MB (16 MB + 16 MB) DIMM cards. Two identical DIMM cards must be added at the same time, one in each DIMM socket.

The computer has two IC DRAM card sockets on the system board. The IC DRAM sockets accept either 4 MB, 8 MB, 16 MB, or 32 MB IC DRAM cards. Two identical IC DRAM cards must be added at the same time, one in each IC DRAM socket.

Both the 820 and the 850 models have 512 KB flash ROM. The systems have 512 KB flash ROM. The flash ROM contains the POST, BOOT, resident setup, and resident diagnostics code. After power-on, the initial code fetched is supplied from this device. A maximum of 16 MB ROM space is reserved, however the system board supports no more than 512 KB.

The flash ROM is a PCI memory device. Access to the flash memory is allowed only from the PowerPC 603e microprocessor. PCI busmasters devices cannot access this memory directly.

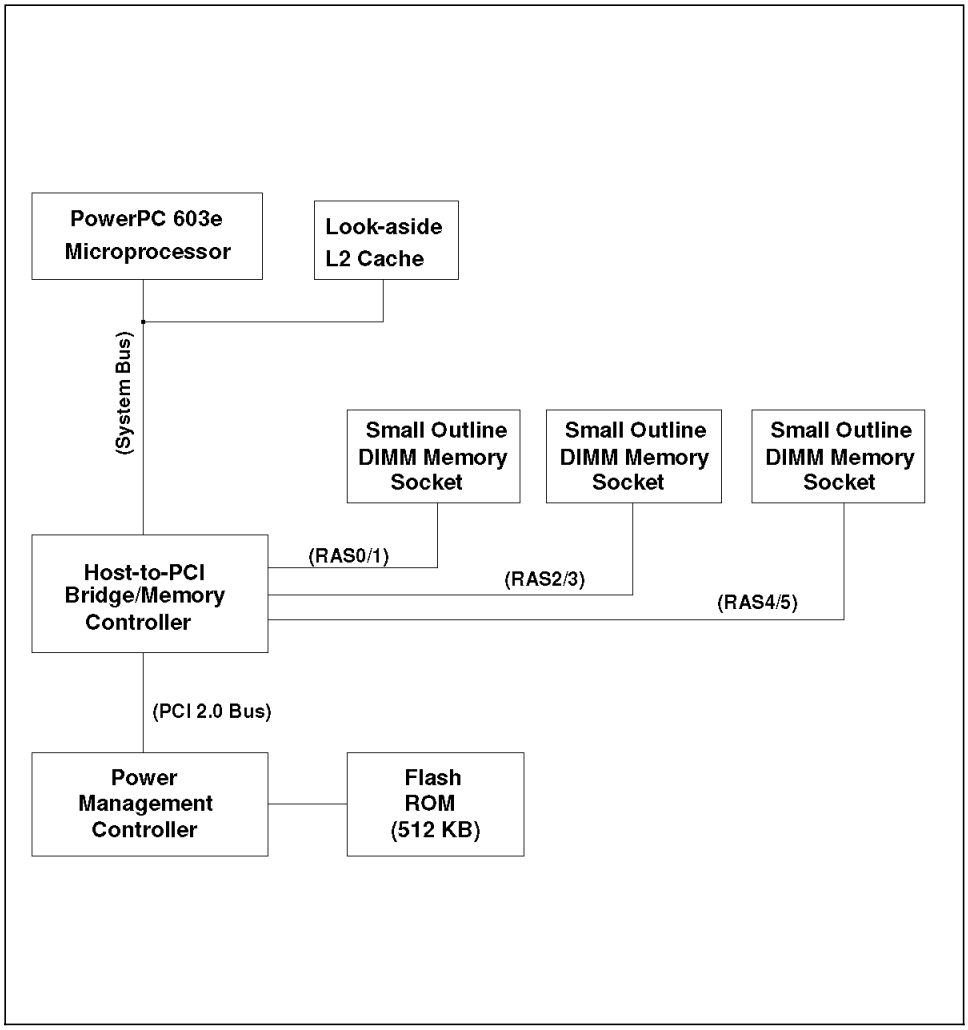

Figure 20. Power Series ThinkPad 820 Memory Subsystem Block Diagram

For a complete overview of available system configurations see Appendix A, “System Details by Model Type” on page 133.

3.4 Disk Subsystems

Personal computers are becoming increasingly more important in the day-to-day business. Due to the dramatic advances in microprocessor technology over the past few years more and more compute intensive applications have been developed. Applications like real-time video or on line transactions need a huge amount of data to be stored on the PC′s mass storage subsystem. Such complex applications need extremely fast access to the disk subsystem. The information stored on the disks are very often business-critical and therefore high reliability is a necessity too.

This section provides an overview of the disk subsystems used in today′s IBM PC Power Series systems, Integrated Drive Electronics (IDE), Enhanced Integrated Drive Electronics (E-IDE) and Small Computer Systems Interface (SCSI). For completeness, we will also give a short description about the two popular disk subsystems that where used in earlier IBM PC′s: Seagate Technology 506 (ST506) and Enhanced Small Device Interface (ESDI).

3.4.1 Disk Subsystem Topology

The disk subsystem is only one of several interfaces within a computer. Other external peripheral interfaces are the keyboard, parallel/serial port and networking subsystems.

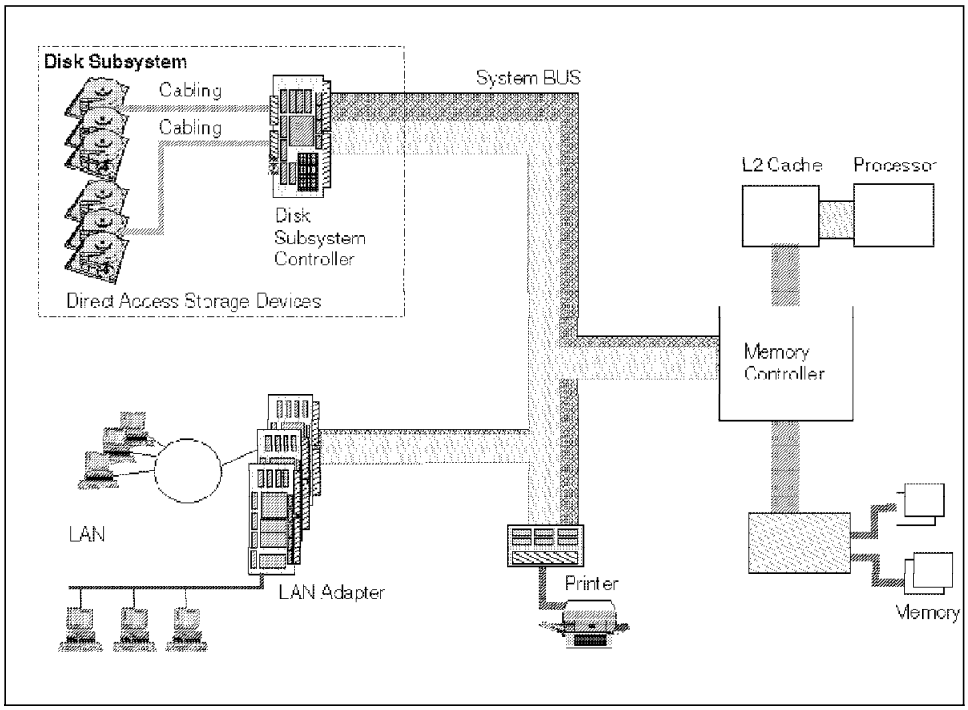

Figure 21. Disk Subsystem Topology

Figure 21 shows a overview of the main components in an personal computer system. The highlighted parts are those that make up the disk subsystem. Typically a disk subsystem consists of the following:

- Disk subsystem controller
- Direct access storage devices, such as hard disks or CD-ROMs
- Cabling between storage devices and disk subsystem controller
- Software to configure and use the disk subsystem

The disk interface can appear at one of two levels: device-level interface or bus-level interface.

3.4.1.1 Device Level Interface

A device level interface has its controlling circuitry on a separate adapter and not on the physical drive. This means, that functions like formatting, head select, error detection, etc., are done on the adapter and not on the device itself. All the device does is the actual mechanical operation of reading and writing the data. A device level interface is shown in Figure 22 on page 81. This is also referred to as a *dumb device*. This makes it very

difficult for manufacturers to develop new devices like hard disks, because all the device can do is determined by what the controller will allow. Another limitation of the device level interface is the type and number of devices that can be attached. Because it is impossible for one controller to hold all the circuitry to control fixed disks, CD-ROMs, tapes, etc. In order to attach multiple devices multiple adapters would be needed. This is not only expensive, it would also take additional expansion slots in the system.

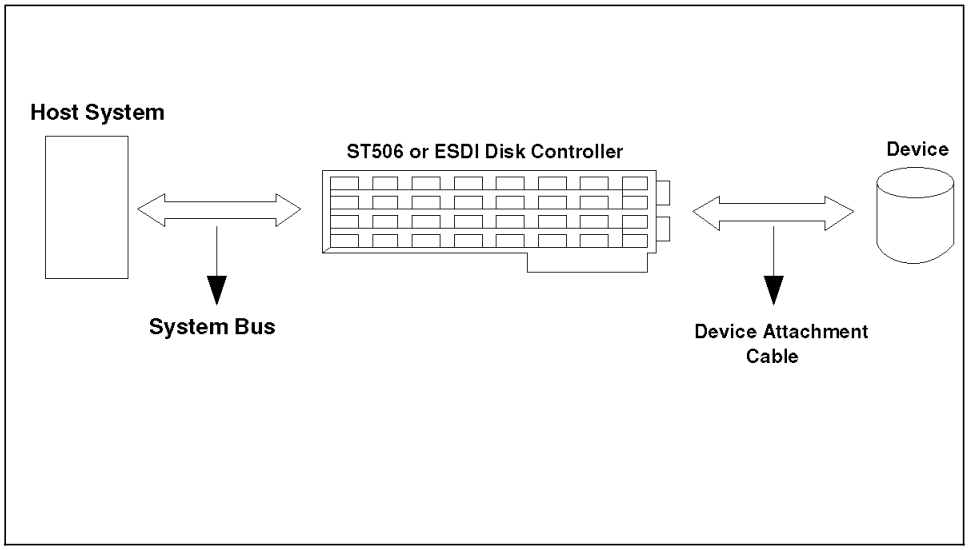

Figure 22. Device Level Interface

3.4.1.2 Bus Level Interface

In contrast to device-level interfaces, the bus-level interfaces (sometimes referred to as system level interface has the controlling circuitry build into the devices own electronics. With a bus-level interface, the drive itself has most of the intelligence for formatting, error detection, seek, read/write, etc. Because the actual device is hidden from the interface signals, it allows technical innovation without affecting the compatibility. In addition, today's bus-level interfaces are not constraint by the serial limitations of the device-level interfaces. The AT attachment interface passes 8 or 16 bit data at a time. The latest SCSI interface support transfers up to 32 bit at a time. Figure 23 on page 82 shows an example of a bus-level interface.

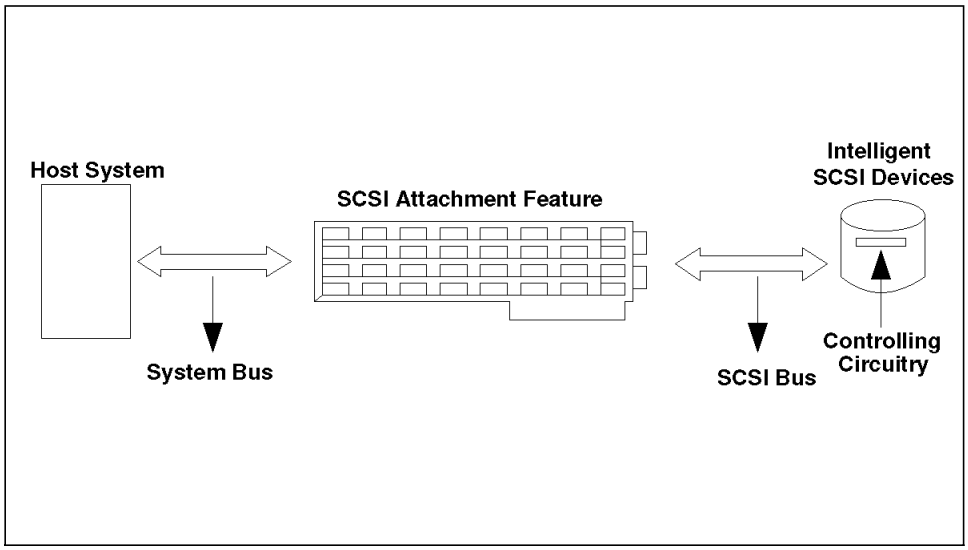

Figure 23. Bus Level Interface

3.4.2 Seagate Technology ST506

One of the first hard disks used in personal computers followed an industry standard device-level interface called ST506. It was developed around 1980 by Seagate Technology. It became very popular and the interface was adopted by many other manufacturers as well. The ST506 standard did not define the data-coding method of the signal recorded onto the rotating surface. Consequently, different encoding techniques were used. ST506 accommodates modified frequency modulation (MFM), run-length limited (RLL), and advanced RLL encoding methods.

- MFM is also referred to as double-density, the most widely used recording method in today's PCs. Double-density recording eliminates the hard clock bits of single-density recording to pack information onto the magnetic medium with twice the density. Single-density was an earlier form of magnetic digital recording called FM for frequency modulation.
- RLL use a complex form of data manipulation to fit even more information onto the storage medium. RLL translates the incoming binary code into its own, different digital code of 0s and 1s, which will then be sent to the surface. RLL has a 50 percent storage increase over MFM. The penalty is its requirement for more complex control electronics and wider bandwidth electronics in the storage device to handle the higher data throughput.

- Advanced RLL improves the storage density that can be achieved even more. This coding system still uses an 8- to 16-bit code translation, but it ensures that digital 1s will never be closer than every four bits. The result is a 100 percent improvement on available disk space and data transfer rate.

3.4.3 Enhanced Small Device Interface

ESDI is basically an upgrade to the ST506 standard. When the ST506 interface proved to be too slow as faster microprocessors arrived, a new disk subsystem technology was required, capable of higher speeds and flexibility. ESDI permits much higher data transfer rates than ST506. It used essentially the same electrical signals but at a much higher speed and also added some new features. ESDI uses similar connections to those of the ST506 interface. Three cables need to be connected to each drive, power, data and control. As with ST506, the drive select jumpers need to be set properly and the last drive connected to the control cable needs to be terminated. Despite the physical similarities, the two interfaces are not electrically compatible. You cannot plug an ESDI drive into an ST506 interface and expect the system to work, nor will an ST506 drive work through an ESDI interface.

3.4.4 Integrated Drive Electronics (IDE and E-IDE)

The first IBM PC used a floppy disk as external storage. There were no hard disks for PCs at that time. Later, when the PC AT arrived, the hard disk was the key to system performance and the controller interface, and it became a de-facto standard. Sometime after the IBM PC AT introduction, the term integrated drive electronics appeared in the computer industry. It is generally known as the AT attachment (ATA) interface. This section provides a short overview of the major functions and features of IDE and E-IDE as it applies to PC Power Series systems.

3.4.4.1 IDE (ATA) Standards

The term integrated drive electronics (IDE) interface first appeared in early 1986. In the middle of 1986, Compaq designed a disk subsystem that packaged the disk controller on the hard disk. This concept reduced the cost and complexity of the disk subsystem and as a side effect, no adapter slot was used on the system bus. This design was soon adopted by other disk manufacturers. But there was no official standard or guidelines, which led to incompatibility between the IDE components of different manufacturers.

In October 1988, an industry group called the Common Access Methods (CAM) Committee was formed by a number of disk manufacturers to develop

an AT interface standard. In November 1990, the group submitted the specifications as a proposed standard to ANSI.

The IDE standard defines how the drive must interface to the system, what commands must be accessible and what the power requirements are. The specific design of the disk controller itself is left to the manufacturer.

Note: Throughout this section the terms AT attachment (ATA) and IDE will be used interchangeably and refer to the same ANSI standard.

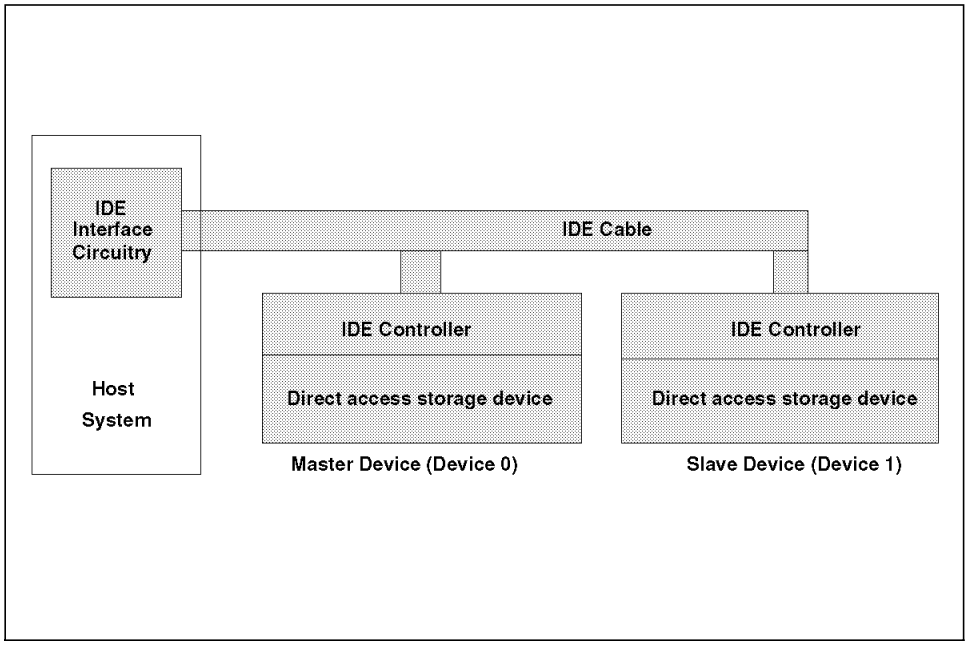

Figure 24. IDE Overview

A typical IDE configuration is shown in Figure 24. The shaded parts make up the IDE disk subsystem. It consists of:

- IDE interface circuitry: This is the interface between the host system and the IDE subsystem.
- IDE cable: Transports data between the host system and the IDE device.
- IDE Devices: Consisting of direct access devices with dedicated controllers.

The IDE-Interface allows a maximum of two IDE devices to be attached. One is called the master, the other is called the slave. Each device uses its own

controller, independently of the other. That means, that the slave does not need a master device to work properly.

The rapid advances in device technology have led to the proposal of the ATA-2 standard. The ATA-2 proposal includes support for faster data transfer rates and larger disk capacity, while maintaining compatibility with the current ATA standard. Two of the proposed variations on ATA-2 are the following:

- FAST-ATA: Adheres to the ATA-2 specifications. Provides better performance and larger capacities.
- Enhanced-IDE: E-IDE adheres to the proposed ATA-2 specifications but goes beyond as well. E-IDE supports up to four devices and adds the AT Attachment Packet Interface (ATAPI). Using ATAPI, CD-ROMs and tapes are supported in E-IDE.

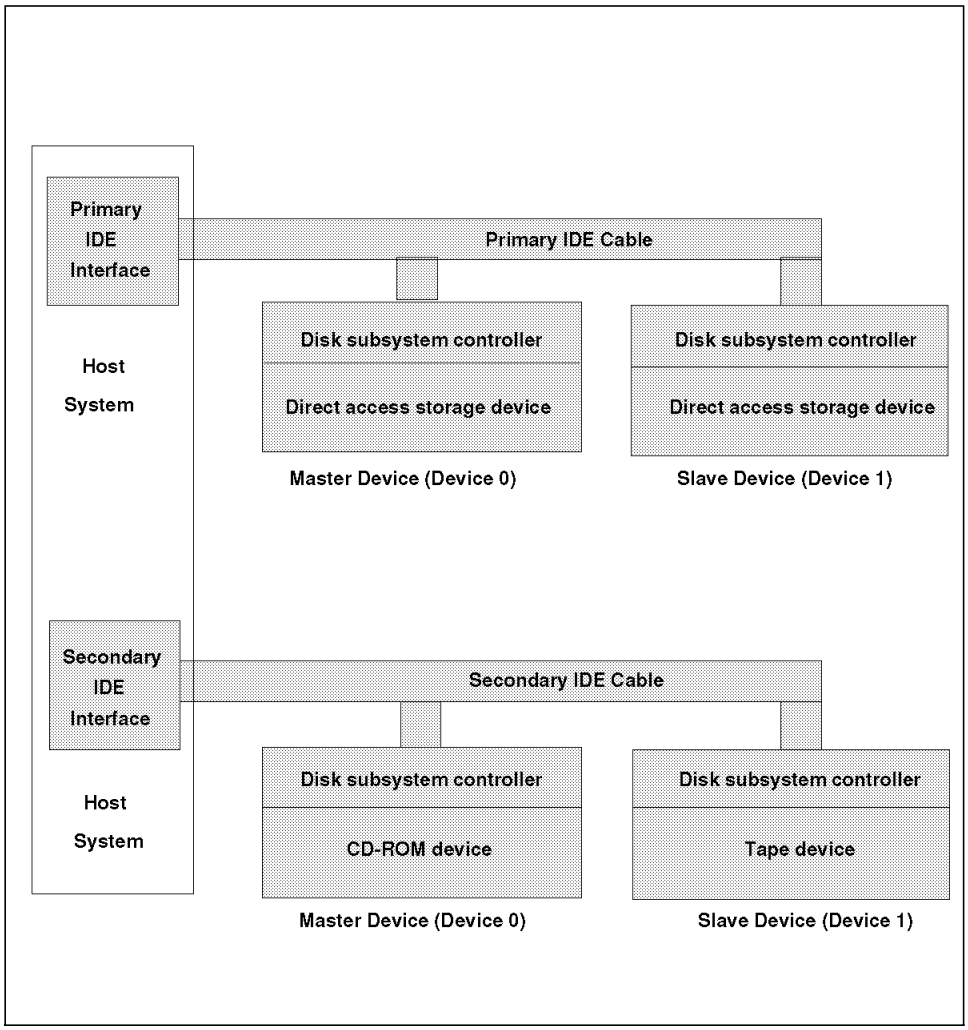

Figure 25. E-IDE Overview

Figure 25 shows a typical E-IDE configuration. E-IDE supports up to four devices, including CD-ROMs and tape drives.
New software is needed to fully exploit E-IDE. Most vendors include the new E-IDE support software in the system BIOS. In systems without E-IDE support in the BIOS, special device drivers need to be loaded for the E-IDE support.

E-IDE is hardware and software compatible with the IDE interface. Components from both may be mixed together, although not all of the E-IDE capabilities may be available in systems that do not have E-IDE support.

The system addresses the drives through a set of registers: command block registers and control block registers. Command block registers are used for sending commands to the drive or receiving status information from the drive. Control block registers are used for controlling the drive or giving alternate status. A short description follows.

Two chip-select lines (-CS0 and -CS1) and three address lines (A0, A1, and A2) are used to select registers. The I/O address is decoded by the system board to determine which chip select signal is driven active.

Table 10 shows the relationship between the I/O address, the state of the chip select signals, and the register that is selected.

Table 10. IDE I/O Addressing

Register	Read/ Write	I/O Addr. (Hex)	Chip Select Signals		Address Signals		
			-CSO	-CS1	A2	A1	A0
Command Block Registers							
Data	R/W	01F0	L	H	L	L	L
Error	R	01F1	L	H	L	L	H
Features	W	01F1	L	H	L	L	H
Sector count	R/W	01F2	L	H	L	H	L
Sector number	R/W	01F3	L	H	L	H	H
Cylinder low	R/W	01F4	L	H	H	L	L
Cylinder high	R/W	01F5	L	H	H	L	H
Drive/head	R/W	01F6	L	H	H	H	L
Status	R	01F7	L	H	H	H	H
Command	W	01F7	L	H	H	H	H
Control Block Registers							
Alternate status	R	03F6	H	L	H	H	L
Drive control	W	03F6	H	L	H	H	L
Drive address	R	03F7	H	L	H	H	H

3.4.5 Small Computer Systems Interface (SCSI)

This section will give a short overview about the SCSI interface.

The Small Computer Systems Interface (SCSI) and IDE will be the most used disk subsystem interfaces in PowerPC systems. IDE because it is an inexpensive and widely accepted standard and SCSI because of its flexibility and fully described standard.

SCSI is a standard bus-level interface through which computers may communicate with attached intelligent devices such as fixed disks, CD-ROMs, plotters etc. It is fully documented in ANSI standard X3.131-1986. Currently there are two defined ANSI standards: SCSI-1 and SCSI-2.

Table 12 on page 93 shows a comparison between SCSI-1 and SCSI-2.

SCSI-2 added several new functions to the SCSI-1 standard. The following are the most important:

- Common Command Set (CCS): The CCS contains specifications for the software controlling the SCSI subsystem, making the SCSI device more compatible with each other
- Fast SCSI: Allows higher transfer rates to improve the performance
- Wide SCSI: Allows a higher bandwidth to improve the performance
- Bus Parity Checking: Improves the availability by providing more error detecting functions
- Tagged Command Queueing: Allows more commands to be queue in a device. In SCSI-1, initiators were limited to one command per logical unit (LU), for example a disk drive. With SCSI-2 up to 256 command can be outstanding to one LU. The target is allowed to re-sequence the order of command execution to optimize the performance. Queued command require a tag to identify the command, therefore the term tagged command queueing.

A large number of devices of different types can be connected to a system via a single SCSI bus cable and a SCSI attachment feature. The attachment feature may be in the form of an adapter or an integrated unit on the system board. SCSI is also device independent, therefore intelligent devices of any form that adheres to SCSI standard may be attached.

Up to seven devices can be attached to a SCSI bus and each device can support up to eight more. This means that it is possible to attach up to 56 devices to a single SCSI bus.

Other SCSI features, such as arbitration, and disconnect/reconnect allow several devices to operate concurrently and to share the SCSI bus efficiently. This is specially important in a multitasking system.

SCSI also offers much higher data transfer rates over other, non-SCSI buses.

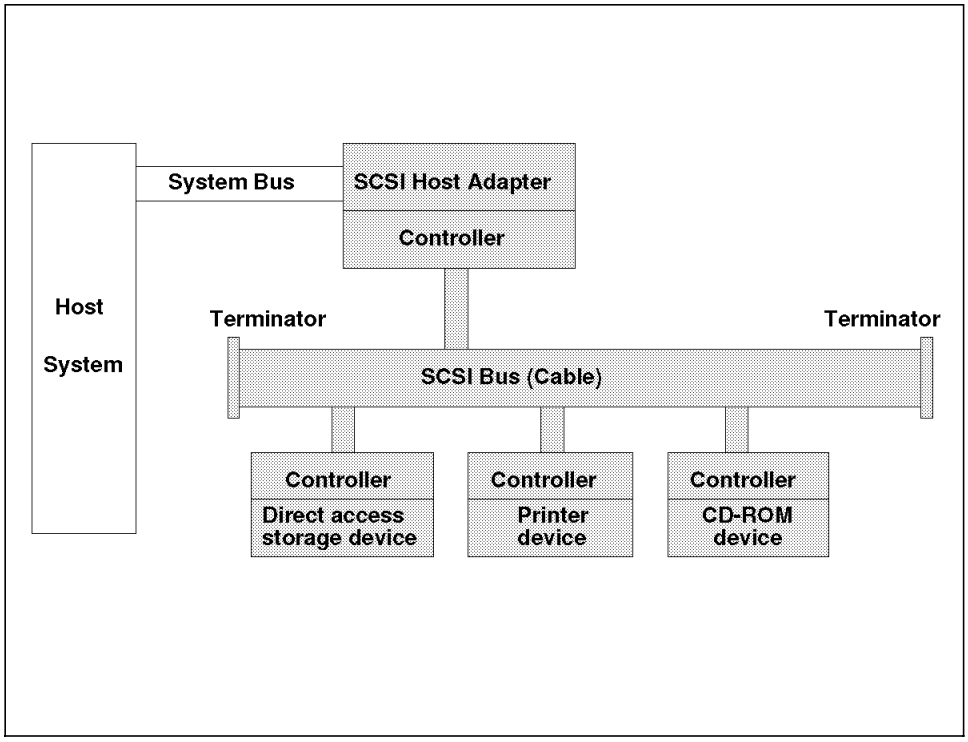

Figure 26. SCSI Interface Overview

Figure 26 shows a typical SCSI subsystem. It consists of a SCSI bus, which must be terminated at each end, and a number of SCSI devices all attached to the bus through dedicated controllers.

Each of the devices attached directly to the SCSI bus is known as an SCSI device. Each one has an ID number which is unique on its bus and is called the SCSI ID. This is usually set via hardware switches or jumpers located on the SCSI device itself. The ID has the following two main uses:

1. Allows devices to be selected.

   It enables, for example, the SCSI attachment feature to talk easily to any SCSI device attached to the bus.

2. Sets priority of the devices during arbitration.

As there are many devices wishing to use the SCSI bus, a scheme has to be used to work out who can use the bus at a given time. This is called bus arbitration. The SCSI ID determine the priority of the device during arbitration.

Note: The SCSI attachment feature is usually assigned a SCSI ID of 7. This ID has the highest priority (see Figure 27).

Each SCSI device may have up to eight logical units (LUs) attached to it. These logical units are not attached to the SCSI bus, instead they are directly attached to the controlling device.

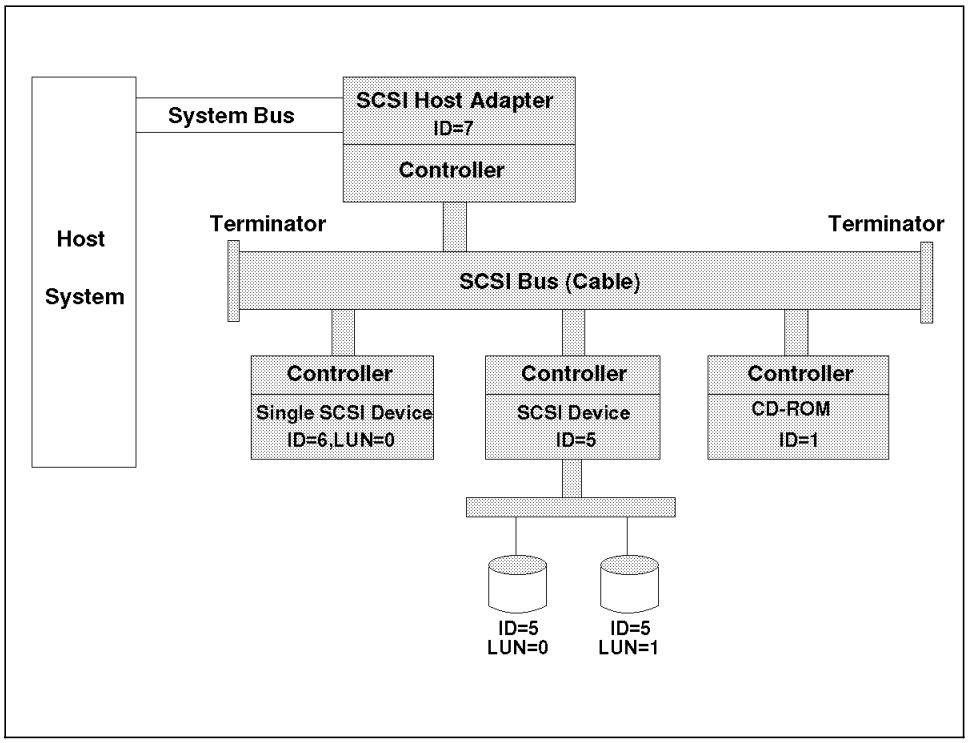

Figure 27. SCSI Device Addressing

The SCSI device in Figure 27 could be a SCSI to ESDI controller. In this example the controller would be attached to the SCSI bus as an SCSI device and then the ESDI part of the controller would attach up to eight ESDI drives. None of these ESDI drives would be attached directly to the SCSI bus. Therefore they would not be SCSI devices; thy would be LUs.

When two SCSI devices talk to each other on the SCSI bus, the one that sends out the commands is called the initiator The SCSI device that receives and processes the commands is called the target.

Because of the nature of its design, SCSI specifies a scheme for bus arbitration. Bus arbitration is required when multiple device attached to a bus, in this case the SCSI bus, can bid to get control of the bus and perform their data transfer.

On the SCSI bus, arbitration is controlled by the logic on the SCSI attachment feature. Arbitration can be initiated by any SCSI device on the bus provided it has the capability built in.

Two modes of data transfer are supported across an SCSI bus: asynchronous and synchronous.

- Asynchronous mode

  In this mode each byte of data sent between the initiator and the target must be requested and acknowledged. For example, an initiator cannot send another byte of data until the target acknowledges that it has received the previous one. Due to this protocol of handshaking, asynchronous data transfer is the slower of the two modes.

- Synchronous mode

  With this transfer mode, multiple bytes can be sent across the SCSI bus by the initiator before it must receive acknowledgements form the target. Since less overhead is needed during the data transfer this mode is much faster. Synchronous SCSI is known as fast SCSI.

All SCSI devices are capable to negotiate which data transfer mode will be used. It is up to the initiator to check whether the target is capable of doing synchronous transfers. The method used to transfer data depends on the devices involved in the transfer. If a device has a relatively long response time or slow operation rate, like a printer, then it is better to use the asynchronous mode to effectively use the SCSI bus. This will allow the SCSI bus to be used by other devices while the printer is printing.

The following are the two types of electrical signaling defined in the SCSI standard:

- Single-ended

  These devices use a separate line for each signal, but they all share a common ground. This method increases the RF noise among the signals,

which causes data errors and makes long cable runs impossible. The maximum cable length in a single-ended SCSI chain is 6 meters.

- Differential

  SCSI uses a positive and a negative line for each signal. The first signal line carries the same signal as the single-ended implementation. The second line carries the logical inversion of this signal. The receiving device takes the difference between the two signals, hence the name differential. RF noise will affect both line equally which decreases data transmission errors. This implementation does not use a common ground. Therefore, the maximum cable length in a differential SCSI chain is 25 meters.

Because the two standards determine operating characteristics and cabling, it is not possible to mix these two types together on the same physical bus.

Single-ended devices and adapters are cheaper to implement and are therefore very popular and commonly used.

SCSI Cabling

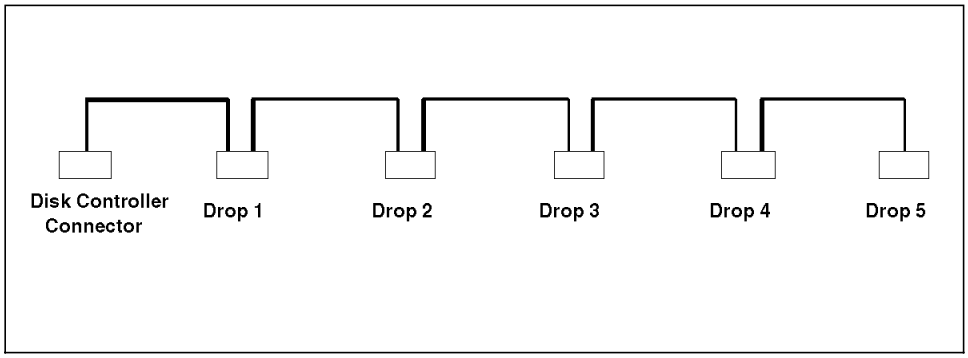

Figure 28. SCSI Cable with Five Drops

The cabling (the SCSI bus) is used to transfer data between the disk subsystem controller and the storage devices. A subsystem cable has usually a controller connector and one or more device connector, often referred to as a drop. A five-drop cable as shown in Figure 28 has five device connectors and one controller connector.

Table 11 on page 93 lists the most commonly used cables.

Table 11. SCSI Cables

Cable Name	Type 1	# of Lines	Connector Type	SCSI Mode
A Cable	I	50	IDC	8-bit
B Cable 2	I + E	68	High Density	32-bit SCSI
P Cable	I + E	68 3	High Density	Wide SCSI
Q Cable 4	I + E	68	High Density	32-bit SCSI
L Cable	I + E	110 5	High Density	32-bit SCSI
A Cable	E	50	Centronics	8-bit SCSI
SCSI-2	E	50	High Density	8-bit SCSI

Note:

1 Type I = internal cable, Type E = external cable.

2 Must be combined with the SCSI-2 cable. Has not been implemented much.

3 A simple adapter may be used to attach 50 pin devices.

4 The Q cable is only used in combination with the P cable to provide support for 32-bit SCSI.

5 A simple adapter may be used to attach 50 or 68 pin devices.

SCSI defines many different modes of operation, including different data transfer modes. Table 12 specifies these different modes.

Table 12. Different SCSI Modes

STANDARD	SCSI-1	SCSI-2		
SCSI Bus Width	8-bit	8-bit	16-bit	32-bit
Cabling	50 Pin Cable or 60 Pin Cable	50 Pin Cable or 68 Pin Cable	68 Pin Cable	Not Jet Defined
Data rate	5 MBps	5 MBps or 10 MBps (Fast)	10 MBps (Wide) or 20 MBps (Fast/Wide)	20 MBps (Wide) or 40 MBps (Fast/Wide)
Parity	Optional	Mandatory	Mandatory	Mandatory
Tagged Command Queueing (TCQ)	N/A	Optional	Optional	Optional
Terminators	Passive	Active	Active	Active

3.4.6 Personal Computer and ThinkPad Power Series Disk Subsystems

This section describes the disk subsystems integrated in the PC Power Series systems.

3.4.6.1 Personal Computer Power Series System 830 and 850

The Personal Computer Power Series System 830 and 850 have an Enhanced Integrated Drive Electronics (E-IDE) controller integrated on the system board. It adheres to the ANSI ATA Standard Revision 3.2.

The controller is directly connected to the PCI bus and is designed to run at PCI speed of 30 or 33 MHz. It supports four IDE devices through two IDE interfaces. The IDE drives can be used as boot devices. The IDE controller supports ATA mode 0, 1, 2 and 3. Table 13 shows these modes and related information.

Table 13. ATA Modes

ATA Mode	Read/Write	Burst date
0	600ns	3.3 MBps
1	383ns	5.2 MBps
2	240ns	8.3 MBps
3	180 ns	11.1 MBps

SCSI-1 and SCSI-2 devices are supported as an option. To use SCSI devices, either a PCI SCSI adapter or an ISA SCSI adapter and the appropriate SCSI bus cable must be added to the standard system configuration.

3.4.6.2 ThinkPad Power Series System 820 and 850

The ThinkPad Power Series 820 and 850 systems standard configurations have SCSI-2 support incorporated. The SCSI-2 controller is integrated on the system board and is connected to the PCI bus. The 8-bit NCR 53C810 controller supports 32-bit wide burst data transfers with variable burst length. This high level SCSI processor acts as a PCI master device and as such requires very little CPU overhead in operation. A 50-pin single-ended SCSI connector is available. On the SCSI bus, a hard disk drive and a CD-ROM are connected. The bus supports 5 MBps and 10MBps data transfer in asynchronous or synchronous modes, respectively.
Additionally, a number of SCSI devices may be connected to the external SCSI-2 connector.

3.4.6.3 Harddisk Specifications

This section gives details on the hard disk drives supported by the Power Series computers.

Table 14 lists the available hard disks for the Personal Computer Power Series 830 and 850 desktop models.

Table 14. Available Harddisks for the Power Series 830 and 850

Disk interface type	**E-IDE**			**SCSI-2**		
Formatted capacity 1	540 MB	728 MB	1 GB	540 MB 2	1 GB 2	2 GB 2
Burst rate (MBps)	8	8	11	10	10	10
Av. read seek time (ms)	13	13	13	13	13	9.5
Av. write seek time (ms)	15	15	15	15	15	9.5
RPM	4500	4500	5400	4500	5400	7200

Note:

1 The actual user-accessible capacity may vary slightly based on the operating system used.

2 SCSI adapter card (PCI) required. External storage enclosure required if used with Power Series 830.

Table 15 lists the available harddisks for the Power Series ThinkPad 820 and 850.

Table 15. Available Harddisks for the ThinkPad 820 and 850

Disk interface type	**SCSI-2**		
Formatted capacity 1	540 MB	810 MB	1.2 GB
Burst rate (MBps)	5	5	10
Av. read seek time (ms)	14	14	14
Av. write seek time (ms)	15	15	15
Avg. latency (ms)	7.9	7.9	7.9

Note:

1 The actual user-accessible capacity may vary slightly based on the operating system used.

3.5 CD-ROM Drives

The following section is a discussion about the CD-ROM drives installed in the Personal Computer and ThinkPad Power Series system.

3.5.1 Personal Computer Power Series 830 and 850 Systems

The two systems have an E-IDE quad-speed (4X) CD-ROM drive integrated in their standard configurations. The drive supports the new ATAPI IDE interface, has multisession support and is CD-ROM XA compatible. The 5.25″ CD-ROM drive can act as a boot device.

The 4X E-IDE CD-ROM drive functions with compact disk that are compatible with the following formats:

- ISO 9660
- High Sierra
- Kodak Photo CD (Orange Book)
- CD-ROM (Yellow Book)
- CD-Digital Audio (Red Book)

Note:

The CD-ROM standards are described in different books.

The Orange Book describes the standards for recordable CD-ROM systems.

The Yellow Book describes the data format standards for CD-ROM disks and includes CD-XA, which adds compressed audio information to other CD-ROM data.

The Red Book refers to the international standard (ISO 10149). It specifies the digitization and sampling rate details including the data-transfer rate and the exact type of pulse code modulation used.

For the technical details of the CD-ROMs see Table 18 on page 100.

3.5.2 Power Series ThinkPad 820 and 850

The CD-ROM drive installed in the Power Series ThinkPad 820 and 850 standard configurations has multi-session capability, supports Photo-CD formats and provides for double speed. It supports both, the standard format and the extended architecture (XA) format.

The CD-ROM drive is exchangeable with the diskette drive. The CD-ROM drive bay supports the following interfaces:

- 8-bit SCSI-2 signals
- Diskette drive interface signals

The SCSI ID of the internal CD-ROM drive is selectable by user accessible jumpers. See Figure 29 and Figure 30 on page 98 for the location of the SCSI jumpers on the CD-ROM drives. The three switches (S0, S1, S2) on the CD-ROM drive are used to select the desired SCSI ID. The default SCSI-ID for the internal CD-ROM drive in the ThinkPad Power Series is set to 3.

Software can read the SCSI ID through the SCSI bus interface.

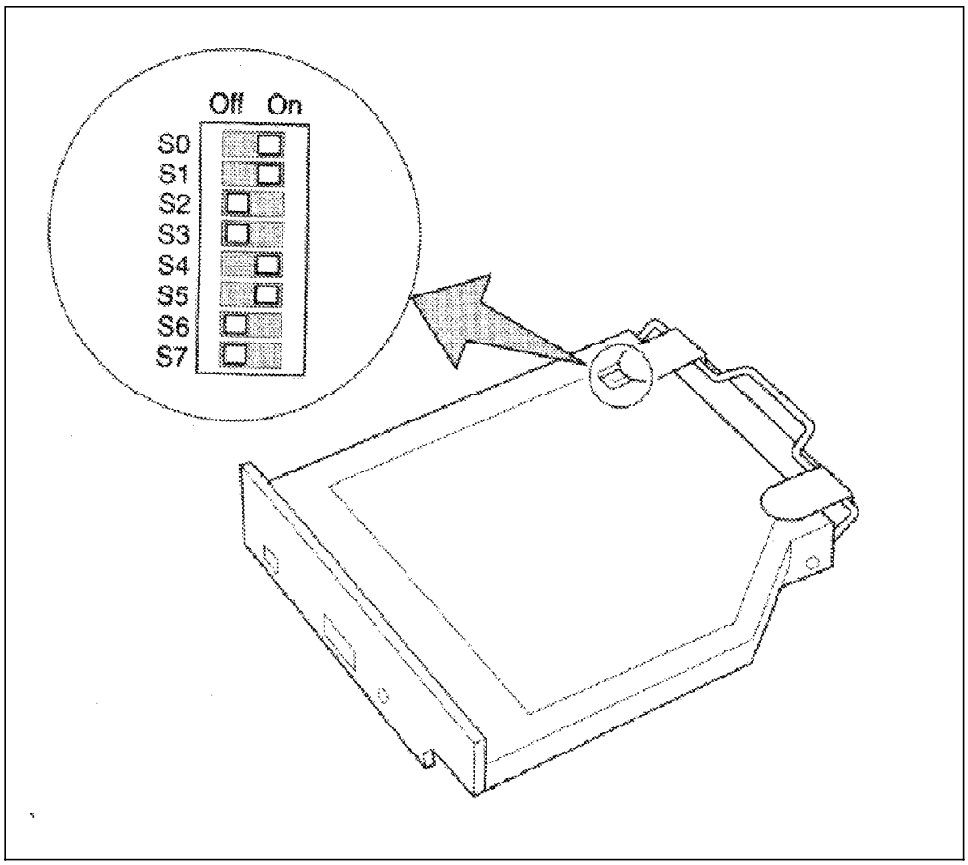

Figure 29. CD-ROM Drive SCSI ID Jumper Location for the ThinkPad Power Series System 820

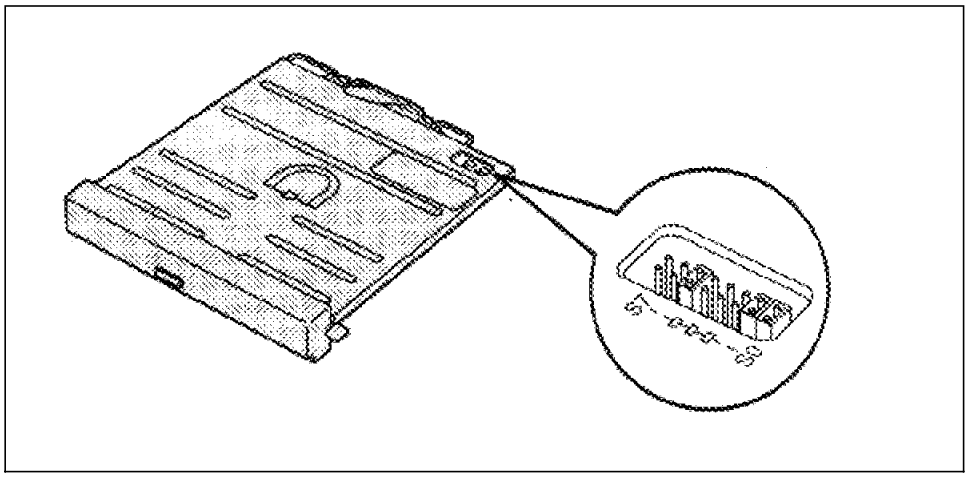

Figure 30. CD-ROM Drive SCSI ID Jumper Location for ThinkPad Power Series System 850

If needed for a specific SCSI configuration, the SCSI ID for the CD-ROM can be changed by simply moving the jumpers. The SCSI ID can be any number from 0 to 6, but each ID must be unique in a given SCSI chain. To set the new SCSI ID, choose an ID that is not already used on that SCSI bus.

Table 16 shows the jumper settings for the SCSI CD-ROM drive ID.

Table 16. ID Jumpers for the CD-ROM Drive

SCSI ID	**0**	**1**	**2**	**3** [2]	**4**	**5**	**6**
S0		J [1]		J		J	
S1			J	J			J
S2					J	J	J

Note:

[1] A J indicates a jumper and a blank indicates no jumper.

[2] This is the factory default setting.

Table 17 on page 99 shows the meaning of jumpers S3 to S7, which normally do not need to be changed.

Table 17. CD-ROM Functional Jumpers	
Jumper	**Description**
S3	No Jumper: Normal operation mode. This is the default setting. Jumper: Drive Test Mode. For engineering use only.
S4	No Jumper: Enable active termination. This is the default setting. Jumper: Disables active termination. Normally this setting is not used.
S5	No Jumper: Allows the drawer to be opened only when the ALLOW command is issued. The eject button is ineffective. Jumper: The Eject button is effective. The PREVENT command prevents the drawer from opening. This is the default setting.
S6	No Jumper: Enables parity check of data read from a media. This is the default setting. Jumper: No parity check. This setting is normally not used.
S7	No Jumper: Termpower is not supplied to the next drive. This is the default setting. Jumper: Termpower is supplied to the next drive. This setting is normally not used.

A CD-ROM status indicator supplies a side-band signal to indicate the drive is working. The amber light-emitting diode (LED) behaves differently depending on the CD-ROM conditions. The meaning of the light is as follows:

1. The LED is off when the drawer is open.
2. After closing the drawer, the LED will be in either of the following states:
   - Off when there is no disk loaded.
   - Off when the drive is ready to execute a command.
   - On when the drive has errors.
   - On when a medium error exists.
3. During operation, the LED will be in either of the following states:
   - The LED stays on while the CD-ROM is transferring data through the SCSI bus.
   - The LED blinks while the CD-ROM is playing audio.

Additionally, the CD-ROM drive supplies analog audio signals to the ThinkPad's audio subsystem.

For the technical details of the CD-ROMs see Table 18 on page 100.

3.5.3 Available CD-ROM Drives for the Power Series Systems

Table 18 lists data of the available CD-ROM drives for the Power Series 830, 850 and ThinkPad 820 and 850.

Table 18. CD-ROM Drive Specifications

System	**Power Series 830/850**		**ThinkPad 820/850**
Disk interface type	E-IDE	SCSI-2 [1]	SCSI-2
Data capacity	680 MB	680 MB	630 MB [2]
Speed	4X	4X	2X
Form factor	5.25 inch / half height	5.25 inch / half height	5.25 inch / slim-line
Loading mechanism	Tray loading [3]	Tray loading [3]	Tray loading [4]
Bus transfer speed (MBps)	8	5	5
Max. sustained data transfer (KBps	600	600	300
Third stroke access time (ms)	220	200	350
Full stroke access time (ms)	380	430	750
Buffer memory (KB)	256	256	256
Compliance	CD/XA and Kodak Photo-CD (multi-session)	CD/XA and Kodak Photo-CD (multi-session)	CD/XA and Kodak Photo-CD (multi-session)

Note:

[1] SCSI adapter card required. External storage enclosure required if used with Power Series 830.

[2] When formatted in data mode 2.

[3] Supports 12 and 8 cm disks by use of an adapter.

[4] Supports 12 and 8 cm disks.

3.6 Video Subsystem

This section describes the video subsystem for the Personal Computer and ThinkPad Power Series systems.

3.6.1 Video Subsystem for the PC Power Series

The Personal Computer and ThinkPad Power Series systems use the integrated E15 graphics chip, which employs the 64-bit S3 Vision864 graphical user interface (GUI) accelerator, and the 16-bit 135 MHz S3 SDAC. The integrated E15 graphics comes standard with a 2 MB frame buffer, providing for up to 1600 x 1200 resolution.

The integrated E15 graphics subsystem uses the standard 15-pin D-shell connector and supports multi-synchronous monitors with at least 64 KHz horizontal scan capability.

Table 19 shows the video modes that are supported by the Personal Computer Power Series 830 and 850 video subsystem using the 86C864 DXP-2 graphics accelerator chip and 2 MB of video DRAM.

Supported modes, in case of a 75 Hz, non-interlaced, vertical refresh rate are:

- 640 x 480 , 16M colors
- 800 x 600 , 16M colors
- 1024 x 768 , 64K colors
- 1280 x 1024 , 256 colors

Table 19 (Page 1 of 2). S3 864 Video Mode

Resolution	**Bit-per-Pixel**	**Refresh Rate (Hz)** 1
640 x 480	4 / 8 / 16 / 24	60, 72, 75
640 x 480	32	60
800 x 600	4 / 8 / 16 / 24	56, 60, 72, 75, 43i
800 x 600	32	43i
1024 x 768	4 / 8 / 16	60, 70, 72, 75, 43i
1024 x 768	4 / 8	60, 72, 75, 43i
1024 x 768	4 / 8	43i
1280 x 1024 2	4 / 8	60, 72, 75, 43i

Table 19 (Page 2 of 2). S3 864 Video Mode		
Resolution	**Bit-per-Pixel**	**Refresh Rate (Hz)** 1
1600 x 1200	4 / 8	43i

Note:

1 i stands for interlaced. Every picture is divided into two halves by skipping every other line. A complete picture is set together from the two halves at a rate of 87 Hz thus giving a total refresh rate of 43.5 Hz.

2 This resolution is currently not supported by an operating system.

In general the operating system device driver, in concert with the user and application software, is free to choose a resolution from Table 19 on page 101. The size of the attached display will determine the optimum resolution and vertical refresh rate. To comply with ISO 9241 Part 3, with respect to flicker, it is recommended that a vertical refresh rate of at least 72.5 Hz be used for 17 inch and smaller displays, and 77 Hz be used for displays larger than 17 inch.

It is recommended that the system and boot ROM software support default screen modes that are ISO compliant, and if possible are factory preset modes for the supported displays. The recommended default modes for resolution are: 640 x 480 VESA 72 Hz, 1024 x 768 ISO XGA 75 Hz, and 1280 x 1024 VESA VDMT 75 Hz.

The resolution is operating system dependent. Not all of the resolutions in Table 19 on page 101 are supported by all operating systems.

3.6.2 Video Subsystem for ThinkPad Power Series

The video subsystem for ThinkPad Power Series consists of a video daughter card that supports the following:

- An entry video card
- A video with motion video I/O card

The video subsystem supports the following LCD (Liquid Crystal Display) displays the following:

- 640 x 480 TFT color LCD display
- 800 x 600 TFT color LCD display

3.6.2.1 Graphic Controller for the ThinkPad Power Series 820 and 850

On the ThinkPad Power Series, the graphics controller is the 90C24A chip (Revision C) made by Western Digital Inc. It supports the 16-bit pixel format on a 800 x 600 LCD display.

3.6.2.2 Video Modes for the ThinkPad Power Series 820 and 850

Table 20 shows the supported mode of operation fro LCD and LCD/CRT combinations.

Table 20 (Page 1 of 2). Video Modes

Video Card Type	LCD Display Type	CRT Resolution	Number of Colors	Refresh Rate (Hz)	Display Devices
Entry Video Card	640 x 480 Color TFT	640 x 480	256	60.0	LCD/CRT
		640 x 480	256	72.0	LCD/CRT
		640 x 480	256	75.0	LCD/CRT
		640 x 480	65,536	60.0	LCD/CRT
		640 x 480	65,536	72.0	LCD/CRT
		640 x 480	65,536	75.0	LCD/CRT
		800 x 600	256	60.0	CRT only
		800 x 600	256	72.0	CRT only
		800 x 600	65,536	60.0	CRT only
		800 x 600	65,536	72.0	CRT only
		1024 x 768	256	60.0	CRT only
		1024 x 768	256	43.5	CRT only
Entry Video Card	800 x 600 Color TFT	640 x 480	256	60.0	CRT only
		640 x 480	256	72.0	CRT only
		640 x 480	256	75.0	CRT only
		640 x 480	65,536	60.0	CRT only
		640 x 480	65,536	72.0	CRT only
		640 x 480	65,536	75.0	CRT only
		800 x 600	256	60.0	LCD/CRT
		800 x 600	256	72.0	CRT only
		800 x 600	65,536	60.0	LCD/CRT
		800 x 600	65,536	72.0	CRT only
		1024 x 768	256	60.0	CRT only
		1024 x 768	256	43.5	CRT only

Table 20 (Page 2 of 2). Video Modes

Video Card Type	LCD Display Type	CRT Resolution	Number of Colors	Refresh Rate (Hz)	Display Devices
Video I/O Card	640 x 480 Color TFT	640 x 480	256	60Hz	LCD/CRT
		640 x 480	256	72.0	LCD/CRT
		640 x 480	256	72.0	LCD/CRT
		640 x 480	65,536	75.0	LCD/CRT
		640 x 480	65,536	60.0	LCD/CRT
		640 x 480	65,536	72.0	LCD/CRT
		800 x 600	256	60.0	CRT only
		800 x 600	256	72.0	CRT only
		800 x 600	65,536	60.0	CRT only
		800 x 600	65,536	43.5	CRT only
		1024 x 768	256	75.0	CRT only
		1024 x 768	256	60.0	CRT only
Video I/O Card	800 x 600 Color TFT	640 x 480	256	60.0	CRT only
		640 x 480	256	72.0	CRT only
		640 x 480	256	75.0	CRT only
		640 x 480	65,536	60.0	CRT only
		640 x 480	65,536	72.0	CRT only
		640 x 480	65,536	75.0	CRT only
		800 x 600	256	60.0	LCD/CRT
		800 x 600	256	72.0	CRT only
		800 x 600	65,536	60.0	CRT only
		800 x 600	65,536	72.0	CRT only
		1024 x 768	256	60.0	CRT only
		1024 x 768	256	43.5	CRT only

3.7 Input/Output Subsystem

The following section is a discussion of the input/output devices and connectors used in the IBM Power Series.

3.7.1 Personal Computer Power Series 830 and 850

As shown in Figure 11 on page 42, an I/O controller connects the common I/O devices like diskette drive, serial ports, parallel port, to the ISA bus. The I/O controller contains the following:

- Floppy disk controller for one 3.5-inch, 1.44 MB diskette drive
- One high-speed parallel port
- Two high-speed serial ports

Parallel Port

The external parallel port connector is a standard 25-pin D-shell female connector. The data lines on the connector are driven by drivers capable of sourcing 15 mA and sinking 24 mA.

The parallel port originates at a connector on the system board and is accessible externally via an internal cable.

Both systems support the IEEE 1284 Parallel Port specifications.

The connector layout and the pin assignments are shown in Appendix F, “Connector Layout and Pin Assignments” on page 169.

The Serial Port

The serial port transfers information using the asynchronous communication protocol. This port can be used to connect devices like printers, plotters, and external modems to a computer.

The 9-pin D-shell male connector and pin assignments are defined for RS-232-C. Voltage levels are Electronic Industries Association (EIA) only. The systems support serial data rates up to 115.2KBaud. The serial port does not support a current loop interface.

The connector layout and the signal and pin assignments for the serial connector are shown in Appendix F, “Connector Layout and Pin Assignments” on page 169.

3.7.2 ThinkPad Power Series System 820 and 850

The following is a description of the auxiliary, user input, devices built into the ThinkPad Power Series systems.

This subsystem includes the following hardware:

- Auxiliary device controller
- Build-in keyboard
- Build-in pointing stick
- External keyboard/mouse connector

Figure 31 on page 109 shows the block diagram of the auxiliary, user input, devices.

Built-In Keyboard

The ThinkPad Power Series systems have a 84, 85, or 89-key keyboard built-in.

Note: The amount of keys depends on the country where the system is sold and its national language requirements. Also, although the outline of the keyboard matches the slim size of a mobile system, it provides all the functions of a full-size keyboard. Some of the keys serve more than one purpose. Some when enabled, work as a 10-key numeric keypad.

To enable the numeric keypad, press and hold the shift key and then press the NumLk key.

To use the cursor and screen control keys when in this mode, press and hold the shift key.

An alternate way to input numeric data, is through an optional numeric keypad, which is available, and is connected externally at the right side of the computer. This will disable the numeric keypad on the keyboard. The external numeric keypad incorporates a mouse connector which allows you to use the numeric keypad and a mouse concurrently.

Pointing Devices

The pointing device is used to control cursor movements or to draw images. The ThinkPad systems have two pointing devices:

- TrackPoint III
- Mouse

The TrackPoint is a pointing device built into the keyboard. The TrackPoint adds a stick to the keyboard and a pair of click buttons below the keyboard. The TrackPoint is located between the G, H and B keys. The motion of the cursor is controlled by pressure applied to the TrackPoint in any direction, the TrackPoint does not move. The speed at which the cursor moves corresponds to the amount of pressure to the TrackPoint. The two click buttons act like mouse buttons. Each click button can be latched by pressing down and moving back toward the front.

The mouse is a kind of pointing device that the user slides on a flat surface to control the cursor movements. The right button is for selecting and dragging items on the screen. The left button simulates the enter key in some applications.

The mouse is connected to the external input-device connector on the right side of the system unit. The IBM two-button mouse and the TrackPoint III can be used concurrently.

If an IBM three-button mouse is attached, then the TrackPoint III is disabled and the three-button mouse is enabled, automatically.

An external IBM PS/2 101, 102 or 106-key keyboard can be attached through the external input-device connector. This will disable the build-in keyboard. The keyboard/mouse connector option cable must be use to connect the the external keyboard.

Multiple Device Operations

Since external device connectors are provided on the PowerPC ThinkPad Series, more than one device can exist at a time on each of key and pointing device signal channels. There are limitations and programming considerations under those environments.

Device Configuration Policy

Static or dynamic configuration heavily depends on how operating systems support external devices. The hardware developers define hardware and firmware implementation and provide guidelines to the software developers. The following are the rules of how key devices and pointing devices are supported in the PowerPC ThinkPad systems:

- Key device configuration and pointing device configuration are handled separately.

- If legitimate external devices are attached, POST enables them unless the user selects otherwise.
- For keyboards, simultaneous operation is not supported. If an external keyboard is attached, the build-in keyboard is disabled.
- When an external numeric keypad is attached, both it and the built-in keyboard are enabled and treated as a single full-size keyboard.
- For two-button mice, simultaneous operation with the TrackPoint III is supported.
- For three-button mice, simultaneous operation is user-selectable through software. When the external pointing device is enabled, the internal TrackPoint may be enabled or disabled. POST disables the built-in TrackPoint when it detects an external three-button mouse. All inbound and outbound data is transferred directl between software and the external mouse. This is important because the TrackPoint controller always tells software that it has only two buttons. Therefore, unless the TrackPoint is disabled when an external three-button mouse is directly connected, conventional software cannot know the number of buttons correctly. Software can activate both TrackPoint and external mouse if it utilizes E2h extended commands.

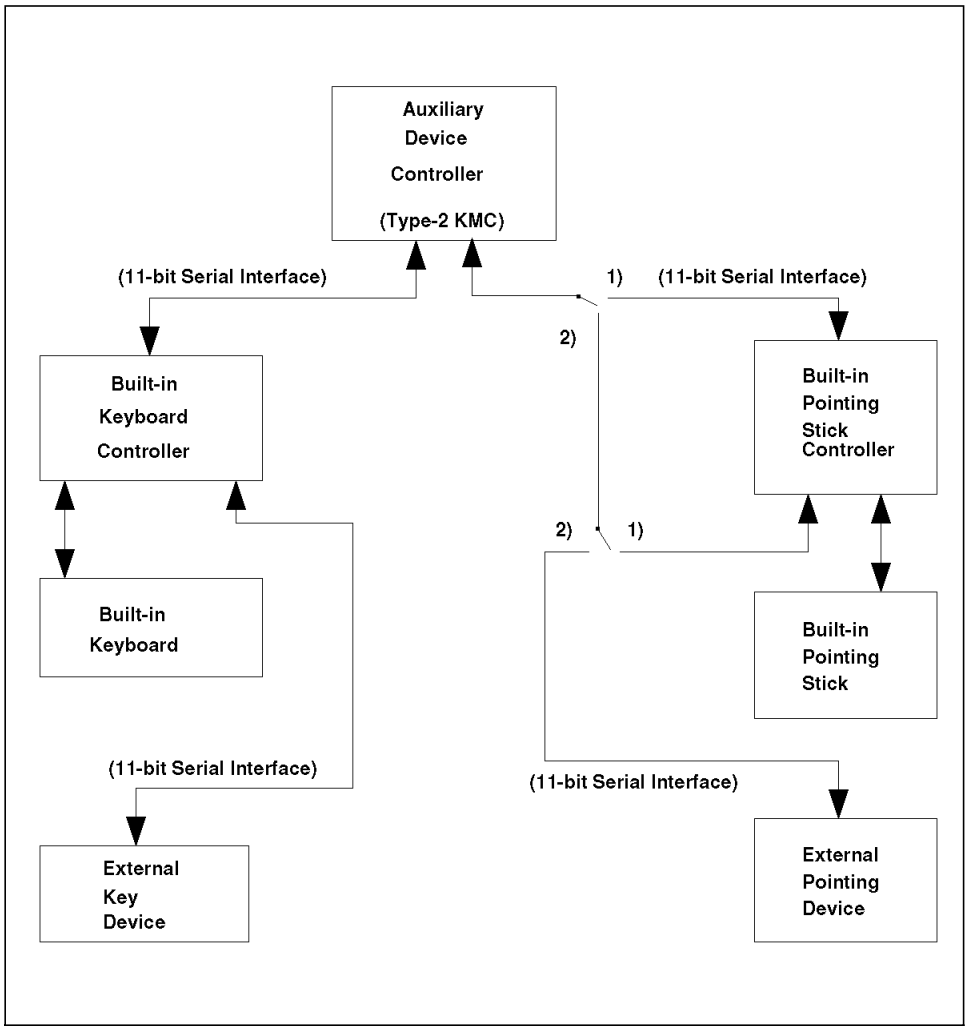

Figure 31. Auxiliary User Input Device Block Diagram

Figure 31 shows how the auxiliary devices are connected together.

There are two switches for controlling build-in and external pointing devices.

When the switches are in position 1, the build in TrackPoint is enabled. The built-in TrackPoint controller has control over the external pointing device. Communication between the auxiliary device controller and the external pointing device is made through the built-in TrackPoint controller.

When the switches are in position 2, the built-in TrackPoint controller is disconnected. The external pointing device is directly connected to the auxiliary device controller.

The channels can be switched by software. To switch them, use Port 15E9.1C, Power Management Control Register 0.

Figure 32 shows the power management control register 0.

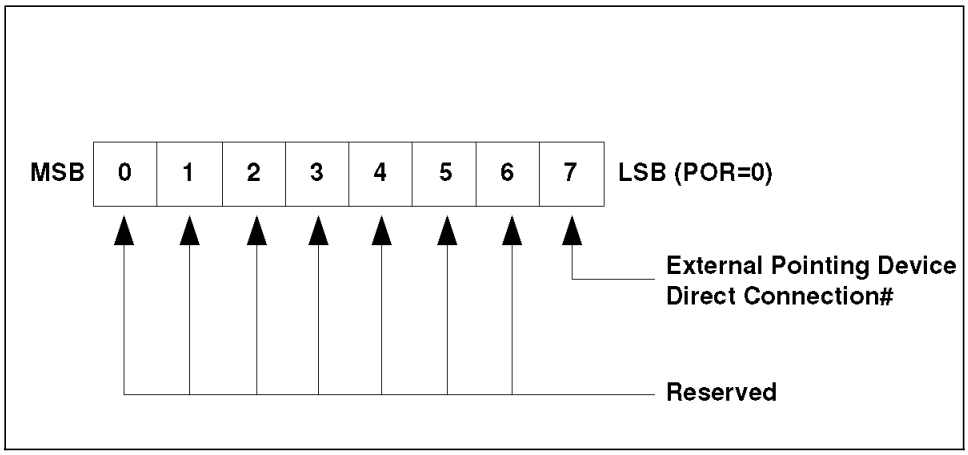

Figure 32. Power Management Control Register 0

Legitimate Devices

The following external devices are defined as legitimate for the PowerPC ThinkPad products:

- PS/2 101, 102, or 106-keyboards
- PS/2 numeric key pads
- PS/2 two-button mouse
- RS/6000 3-button mouse.

3.8 Firmware

This section describes the firmware for the Personal Computer and ThinkPad Power Series.

The system firmware is program code, typically stored in flash ROM, via flash-EEPROM soldered onto the system board. It is the first code to execute when the system is powered on and it takes the system from the power-on

state to a state where an operating system loader is in memory ready for execution. Subsystems on the Power Series that commonly need to be initialized, tested and verified, are:

- Processor
- Memory
- L2 cache
- Diskette
- SCSI-II (ThinkPad Power Series)
- IDE (Personal Computer Power Series)
- Network
- Keyboard
- Mouse
- Serial port
- Parallel port
- Video
- Audio
- Time-of-day clock
- Password
- Interrupts
- Time-base
- Bootstrap
- Common library
- System messaging
- Configuration

3.8.1 Structure of Firmware

The firmware of the Personal Computer and ThinkPad Power Series is organized into three sections as shown in Figure 33 on page 112.

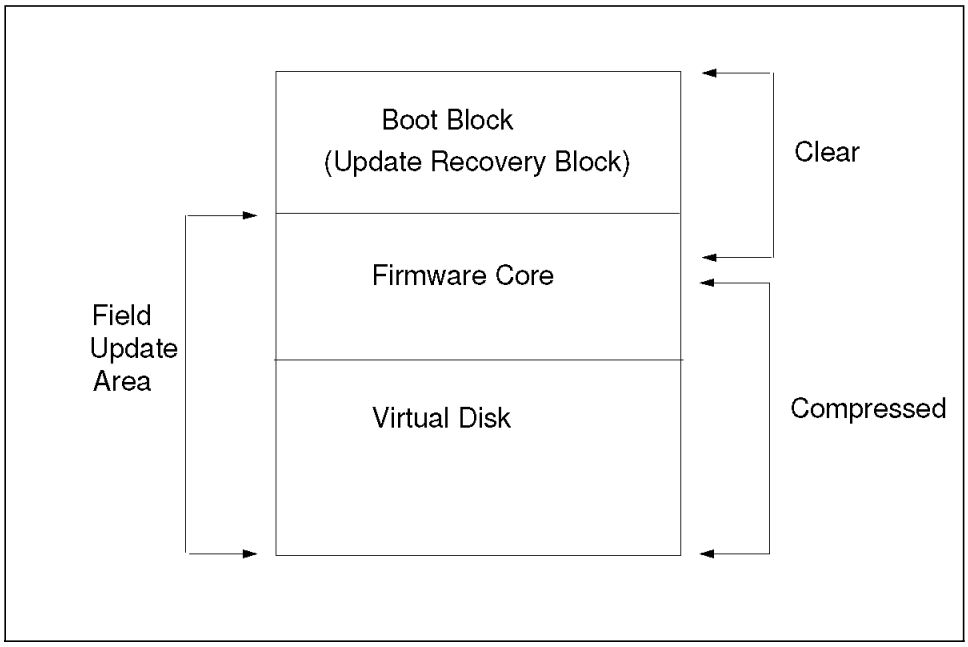

Figure 33. High-Level Block Diagram for the Firmware

Boot Block: The boot block program executes only when the system is powered on after a failed flash update. The job of the boot block is to reload the soft-executable image of the firmware from diskette. This requires a Flash Recovery diskette.

Firmware Core: The firmware core is responsible for bringing the system up to a point where the compressed image of the firmware is decompressed and running in memory.

Virtual Disk: The virtual disk contains all the plugable modules required to support the individual hardware subsystems.

3.8.2 Operation

Figure 34 on page 113 shows the general flow of the firmware operation.

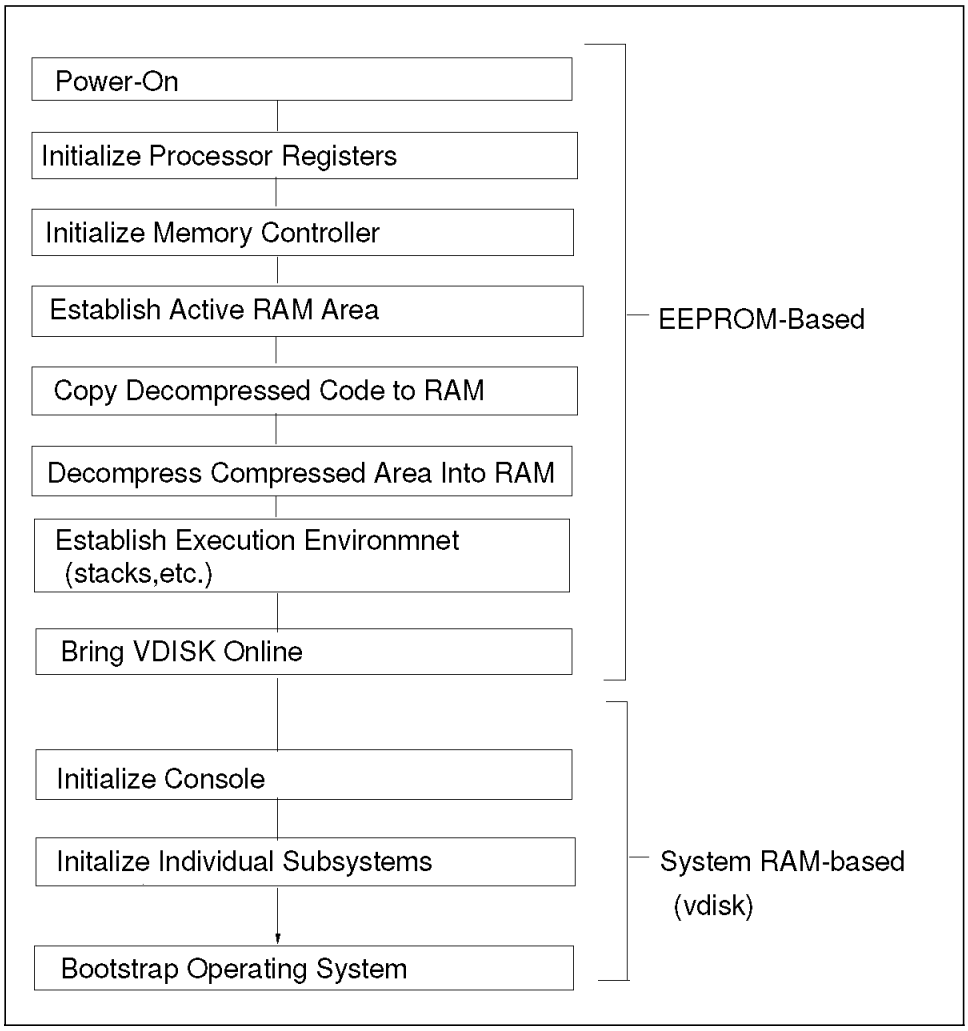

Figure 34. General Flow of the Firmware Operation for the Personal Computer and ThinkPad Power Series

- Power-on: The cold start code begins operation at power-on.
- Initialize processor registers: The processor registers are programmed.
- Initialize memory: Base memory establishes a working subset of system RAM. The memory controller is programmed and the memory subset is tested.
- Decompression: The majority of the system firmware is stored in compressed form in the flash ROM. Decompression takes the

compressed image from flash ROM and decompresses the image into system RAM.

- Stacks: A user stack, an interrupt stack, and a debugger stack are established.
- Virtual Disk: The firmware maintains an internal virtual disk for storing the various files required to initialize and boot the computer.

3.8.3 Initial Program Load

The responsibility of the boot code is to get a boot image into memory. Common sources for the boot image include hard disk, diskette, and CD-ROM.

3.8.3.1 Bootstrap

The steps involved in the boot process are shown in Figure 35 on page 115. Upon power-on, the firmware stored within the system must initialize enough hard ware to perform the boot image load. This initialization results in the cold-start transient state of the system. This system state exists just long enough to load the next stage of software. The firmware then loads the boot record that contains data structures defining the location of the boot image. Next, the firmware loads the boot image into system memory. Finally, the firmware transfers control to the boot image, thus concluding the original transient system state. The boot image then establishes whatever state it requires to proceed with its function.

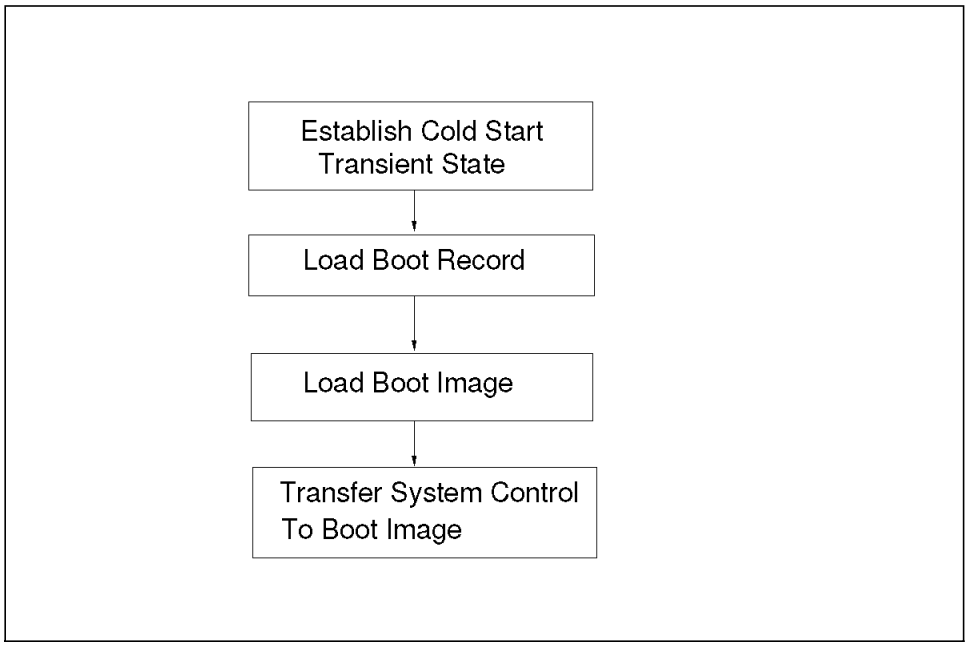

Figure 35. Boot Process Overview of the Power Series

3.8.4 Boot Record

The desire to remain compatible with Personal Computer (PC)-style media has resulted in a boot record format consistent with, but with an extension to, the existing PC structure. The PC system disk boot record contains 446-bytes of program code, a four entry partition table totalling 64-bytes, and two signature bytes.

Each bootable device must have a boot record. The real-time Clock (RTC) environment defines a partition-type boot record for all bootable devices beyond disks, such as diskette and CD-ROM. This is different from the PC-style bootable diskette and CD-ROM that do not have a partition-type boot record.

The boot record is the first sector on the device. The firmware will read one or more records from the target device until at least 512 bytes have been loaded. The layout of the first 512 bytes of a boot record is shown in Figure 36 on page 116. To support media interchange, the PC compatibility block is likely to be occupied by a PC-style boot program.

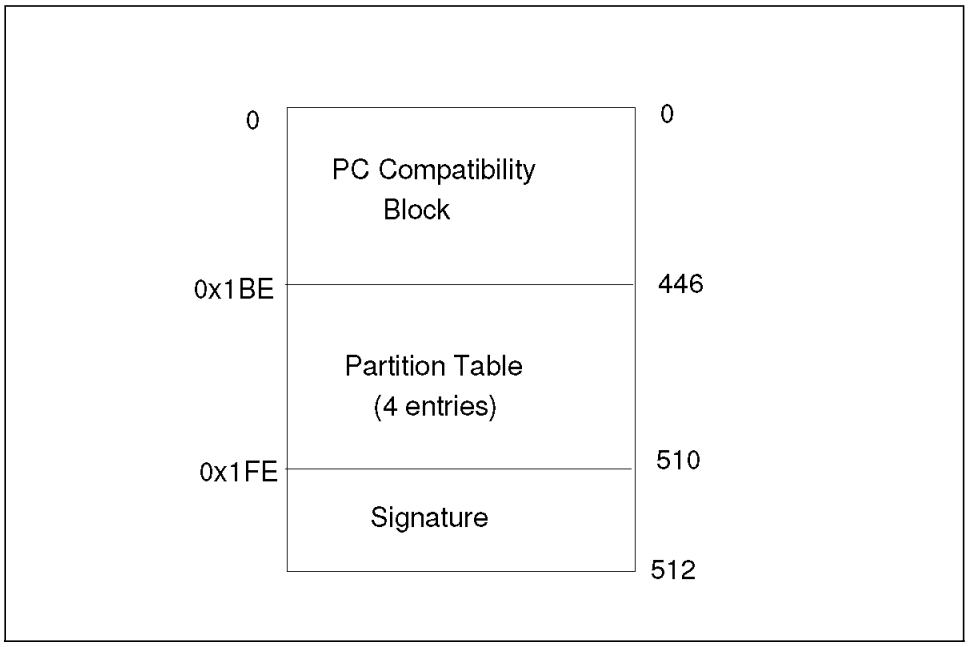

Figure 36. Boot Record for the Personal Computer and ThinkPad Power Series Systems

The firmware will do the following:

- Read the boot record from the boot devices
- Find the RTC partition table entry
- Read the relative block address (RBA) start value
- Read the second sector of the boot image into memory
- Determine the extent of the boot image up to but not including the reserved space, load image
- Allocate a transfer buffer for the load image, no fixed location
- Transfer the load image into system RAM from the boot device
- Check the load image for validity
- Disable external interrupts
- Transfer control to the PowerPC boot program entry point

Note: Only the load image is actually brought into memory by the system firmware.

The entire boot image is not necessarily loaded by the firmware. Only enough of the boot image is loaded to ensure that the PowerPC boot program is in memory. The reserved space is not loaded. This allows the RTC-style partition to grow to any arbitrary size after the boot program. The overall partition size could easily exceed available system memory, especially in systems with entry-level RAM capacities.

3.8.4.1 System State Overview

When the firmware passes control to software loaded through the boot mechanism, the following are true:

- The CPU is in big-endian mode.
- The I/O space is configured as contiguous.
- Addressability is established for the extent of the load image and cannot be guaranteed beyond the load image because of the limited capabilities of BATCH registers. No further addressability is implied or guaranteed.
- External interrupts are disabled.
- The firmware has moved itself to RAM and is running from RAM.
- Interrupts are directed to RAM.
- Residual data structures.
- The booted software must be position independent code. The load is not a fixed address.

3.9 Power Management Subsystem

Power-managed systems must allow for software control of power management features. The specification recognizes that sophisticated power management algorithms need to be managed in software, based on some user-selected policy. The PowerPC Reference Platform Specification therefore has a section that defines power management. The following section describes the power management (PM) subsystem used in the IBM Personal Computer and ThinkPad Power Series. The PM is controlled by the operating system to allow for flexibility and graphical user interfacing as well as minimizing the hardware effort.

3.9.1.1 System Power States

The following are the PM levels of the Personal Computer Power Series:

- Full On
- Power Management Enable
- Standby
- Powered
- Prepare for Hibernation
- Hibernation

Each state defines a system power consumption and performance level. These levels are also inversely related to the resume time, the time necessary to return to full performance.

The following figure shows the relationship for each states.

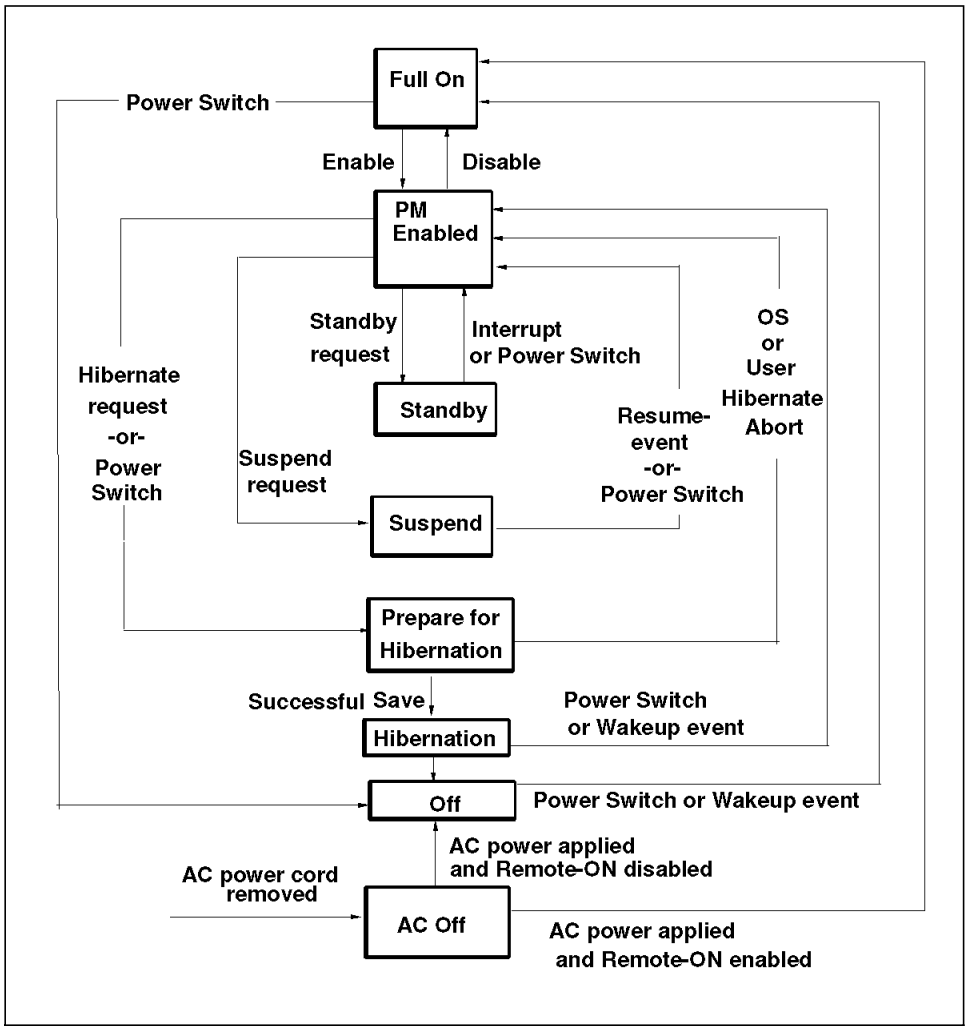

Figure 37. Power Management Mode State Transitions for Personal Computer Power Series Systems

Full On: The full on state is the default operating mode and has the following characteristics:

- The system operates at maximum performance.
- All devices are on and their power usage may be at a maximum.
- All devices are inhibited from entering any of their supported lower power states.

Power Management Enabled: In the power management enabled state, also known as local standby, the system is doing work but some unused devices may be transitioned to a lower power state. The operating system controls the power management of the devices. The system may operate at a reduced performance level due to increased latency when applications require service from a device which is in lower power state. In general, the increase in latency should not be noticed by the user. PM-enabled mode is the basic working state in a power-managed system. In the PC Power Series system, this state has the following characteristics:

- Devices enter low power mode asynchronously. Each device automatically and independently enters low power or power down mode if it is idle for a user-defined period of time.
- CD-ROM(s), hard disk(s), and the audio subsystem are capable of being put in low power modes.
- The display may be blanked.

If an I/O request occurs, any devices required to service that request will be returned to full power.

Standby: In the standby state, PM takes the entire system into a power conservation mode, all subsystems controlled synchronously. The system enters this state after a user defined period of inactivity or by the user activating a hot key or icon. The system will still respond to interrupts, but the response time will increase due to the CPU being placed in a low power mode. Recovery from the standby state to the PM enabled state appears instantaneous, although there might be a slight delay in accessing the hard disk as it is spinning up. The CPU does not require a reset. In the desktop system, this state has the following characteristics:

- The system operates at reduced performance due to response latency.
- The display is blanked.
- Devices are in the lowest power state that can still maintain the state of the devices (that is, the hard disk is spun down).

Suspend: In the suspend mode the system has the following characteristics:

- The display is blanked
- The CPU clock is stopped
- Devices are in their lowest power state
- The L2 is disabled after being flushed
- Other PCI clocks may be stopped

- System memory is still being refreshed
- A limited number of interrupts return the system to the PM-enabled state.
- Network communication are not maintained in this state
- Prior operation resumes after returning to the PM-enabled state, with the exception of network communications, that will have to be reestablished by the user upon returning to the PM-enabled state

Note: This state is not supported by AIX.

Prepare for Hibernation and Hibernation: The system enters the hibernation state via an intermediate state referred to as the prepare for hibernation state. After a user-configurable period of inactivity, by the user activating a defined hot key or icon, or by pressing the power button while in the powered suspend or PM enabled state, the system will enter the prepare for hibernation state. All subsystems will be activated and the PM executive will attempt to store the contents of system memory and the internal state of the machine on the system hard disk. The application software is required to maintain shadow registers for write only registers such that their states may be saved as well. In addition, the software must reset the failure-safe timer during the preparation for hibernation. In this case, there are two possible situations:

1. In case the save completes successfully, the system will immediately transit to the hibernation state.
2. In case the save doesn′t complete successfully, the system will return to the PM-enabled state, with the screen lock activated, or it will move to the Off state without saving the system state. The user will be allowed to predefine the path taken in case of an unsuccessful attempt to hibernate. Once the hibernation request has been sent to the PM, the sequence of events required to prepare for hibernation are as follows:

- While in the prepare for hibernation state, the power LED blinks rapidly to indicate to the user that hibernation is imminent.
- PM saves the state of the CPU and all subsystems, including the memory controller and the system memory, to hard disk.

Resuming from hibernation to the PM enabled state has the following characteristics:

- A wakeup event returns the system to the PM enabled state, after the system is initialized and an abbreviated power on self test (POST) is performed.
- System date and time needs to be updated.

- A screen lock password, if activated, will be requested upon resume from hibernation.
- Prior operation resumes after returning to the PM-enabled state, with the exception of network connections, that need to be reestablished by the user or the operating system.

Off: The system enters the off state, when the power button is pressed while in the full on state or by activating a go-to-off-state event. For example, the user holds down the shift button and presses the power button to transition to the off state from any other system state. In the PC Power Series system, the off state is defined as follows:

- System is not operating
- The power supply is off, except for +5 volt
- The real-time clock (RTC) is still powered on
- System state information is not saved.
- When the power button is pressed, the system resets, initializes, and transitions to the full on state.
- This is the initial state of the system.
- This state has the same characteristics as the hibernation state, only the transitions in and out are different.

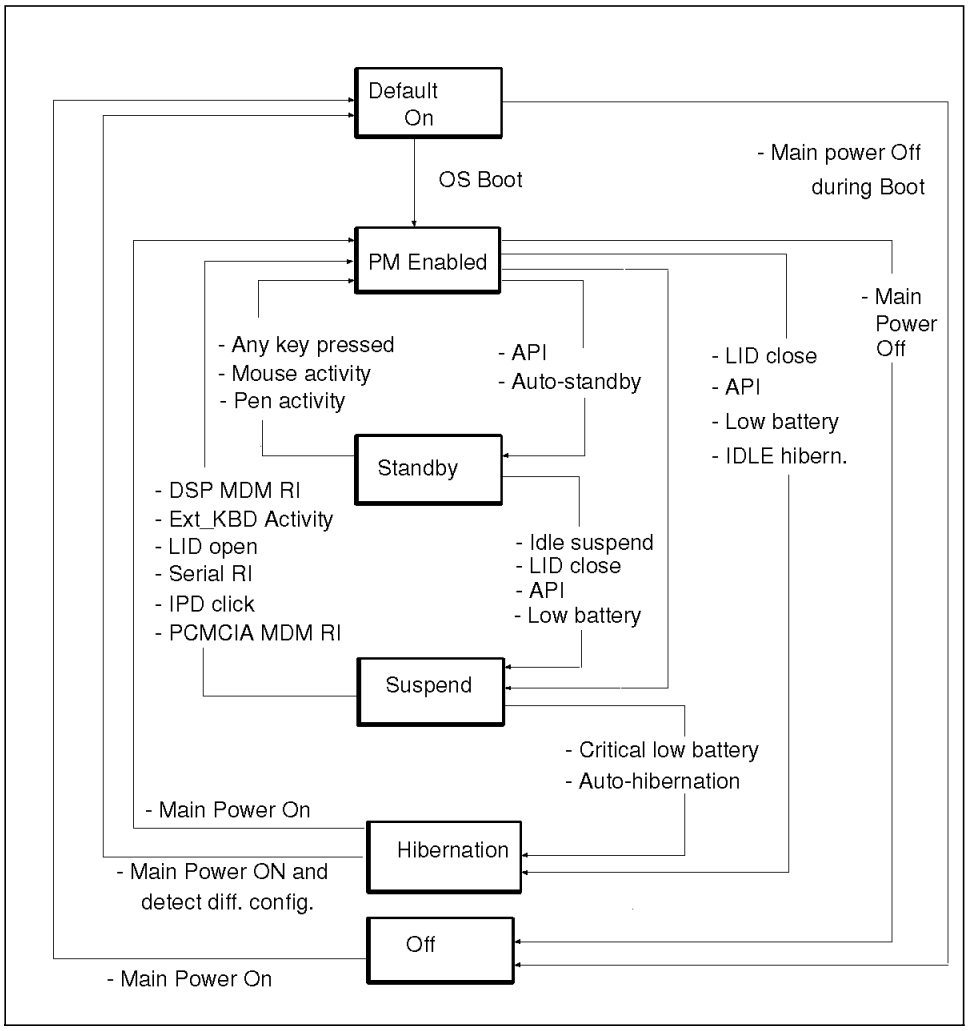

Figure 38. Power Management Mode State Transitions for ThinkPad Power Series Systems

System state transitions are controlled by the PM in conjunction with the device drivers and are activated by system activity level, interrupts, and external events.

- Enable - disable
- Power Button - turning off
- Successful save
- Hibernation abort

- Power button - turning on
- User request
- Inactivity
- Resume event
- Wakeup event, other than pressing the power button
- Remote-on jumper

Table 21 shows the state of the suspend mode and power-on indicator for the different operating modes:

Table 21. Power Management

Operation Mode	**Status Indicator**	
	Suspend Mode	**Power-on**
Suspend mode	Green	Off
Entering or resuming hibernation mode	Green (blinking)	Green
Normal operating mode	Off	Green

Suspend Mode: There are two types of suspend modes.

Partial Suspend: Two beeps will be heard when the system enters partial suspend mode. In this mode, not all tasks are stopped. Partial suspend mode is supported only by those operating systems that do not have the capability of supporting full suspend mode, consequently, less power is saved. You should not exchange the battery pack in partial suspend mode.

Full Suspend: One beep will be heard when the system enters full suspend mode. In full suspend mode, all tasks are stopped and stored in memory to save power. When the system resumes normal operation, all tasks are automatically restored. The battery charging time in full suspend mode is shorter than when charging in partial suspend mode.

Hibernation Mode: One short beep will be heard, a graphical message seen, and again one short beep will be heard when the computer enters hibernation mode. In this mode, all tasks are stopped, memory data and the current status of the computer are stored on the hard disk drive, and power is turned off. No battery power is used. When power is turned on again, the computer automatically restores the tasks and resume normal operation.

Terminology: The following terminology applies to the power management:

- Resume, from suspend: The ability to resume operations from the point at which an application left off before entering the standby or suspend mode. This appears instantaneous to the user. Also known as instant on.
- Rapid wakeup: The ability to continue operations from where an application left off before entering faster than the normal boot process.
- Powered down: Device is put into low power mode and may or may not retain its state.
- Power off: Power is removed from device and device dose not retain its state.
- PM: The part of the OS software that handles interfacing and control of the power management firmware/hardware. Also known as the host or simply the operating system.

3.10 Security

Several security features are provided to help protect the hardware, and the information is stored on the hard disk. This chapter discusses these features.

The PowerPC Series system provides both hardware security and data security. They are provided through passwords and locking features.

3.10.1 Passwords

The Personal Computer and ThinkPad Power Series systems provide the following two password levels to protect from unauthorized use of the systems:

- Power-on password (POP)
- Supervisor password

Power-on Password: A power-on password (POP) protects the system from unauthorized use. If a POP is set, the password prompt appears at the following times:

- Each time the system is turned on
- When the system is returned to normal operation from suspend mode

Do not forget your power-on password, because it will be difficult to reset it.

Personal Computer Power Series: If you have a Personal Computer Power Series system, do the following to clear a password:

1. Remove the power cord. This is important because otherwise the memory area where the password is stored stays powered.
2. Remove the battery for at least 30 seconds.
3. Replace both the battery and the power cord.

ThinkPad Power Series: Following is a short description of a procedure to clear the password on a ThinkPad system. The procedure should be done by a trained person only, otherwise you should proceed as it is stated in the user's guide.

Do the following:

1. Power of the computer.
2. Open the LCD panel and open up the keyboard.

3. Remove the CD-ROM drive or the diskette drive, whichever is currently installed.
4. Identify the J21 connector (Model 850) or the J17 connector (Model 820). It is located on the right hand side of the CD/Diskette drive bay on the far end, below the printed circuit board.
5. Install a jumper on this connector so that the two pins are connected.
6. Power on the computer.
7. Power off and remove the jumper.

To set a new power on password, select password on the easy setup screen, then enter the password.

Supervisor Password: A supervisor password provides a higher level of security than the POP. The supervisor password protects the system functions from being used by unauthorized users and protects the hardware configuration from unauthorized modifications. The supervisor password prompt appears when entering Easy Setup. It prevents the unauthorized changing of the startup-device sequence and other system configuration information, as well as the unauthorized use of system utility programs.

Important

If you enter an incorrect password, a key symbol with a red x appears. Try entering the password again. If you enter your password incorrectly three times, then the system generates a beep tone and the system stops. Turn the computer off and wait 5 seconds, then turn it on and tray again.

Do not forget your supervisor password, because you cannot reset it by yourself. If you forget it, you will have to bring the system to your place of purchase or an IBM service representative to have the system board replaced.

Some operating systems provide a system-lockup capability as an additional security measure. Check the operating system documentation for details.

3.10.2 Locking Features

The Personal Computer and ThinkPad Power Series systems also have features to secure the hardware.

Cover Lock and Keys: The PowerPC systems have a keylock for their covers and internal I/O devices. In the locked position, it mechanically prevents the covers from being removed and protects your system from having anything removed or physically tampered.

The PowerPC ThinkPad systems have additional hardware features which can be used to securely lock the systems with a user-selected padlock and chain or cable.

3.11 Easy Setup and System Management Services

The following section will discuss the system utilities available to test and configure the system and diagnose a hardware problem.

The PowerPC Series system have the following options to test and and configure the system:

- Power-on Self Test (POST)
- Easy Setup
- System Management Services (SMS)

Power-on self test

Each time you power on the computer, a power-on self test (POST) is initiated. The POST checks the following:

- System board
- Memory
- Display
- Keyboard
- Diskette, hard disk, and CD-ROM drives
- Parallel and serial ports
- Pointing device

If POST finds that any of the components do not work correctly, then an error code is displayed. Most of the POST error codes are common to all PowerPC systems, but some are unique to a specific model.

For a complete listing of POST and diagnostic error codes for a specific PowerPC model, always refer to the documentation for that model.

The most common POST and diagnostic error codes are listed in Appendix B, “POST and Diagnostic Error Codes” on page 139.

Easy Setup for the ThinkPads and System Management for the desktop systems provide tools to perform a couple of hardware related tasks such as:

- Viewing and, in some cases, change the system setup, Sys Config icon.
- Setting the sequence in which devices are searched for startable code, Start Up icon.

- Testing selected devices and functions, Test icon.
- Setting and removing passwords and the unattended start mode. In addition you can view information about your computer, vital product data (VPD), copy diskettes and update system programs, Tools icon.

Easy setup or system management can be started in the following ways:

- During the startup of the PC press F1, before the last icon appears on the screen.
- If a problem occurs during the startup, for example a keyboard problem due to a key being stuck on the keyboard, they will be started automatically.

Note: To temporarily override the currently active boot sequence with the default, factory setting, sequence press F5, before the last icon appears on the screen. Unlike the previous personal computers, on the Personal Computer Power Series an operating system can access and manipulate the hardware data stored in non-volatile memory (NVRAM). The possibility to access the data from within the operating system allows the system management programs to be more user friendly. It also helps available applications like NETFINITY, that manage hardware in networking environments, to remotely read and alter hardware information, thus improving the effectiveness of remote system management.

Figure 39 on page 131, shows the easy setup primary screen of an IBM Personal Computer ThinkPad as an example. Icons, representing the tasks to be done, are used to make the program more language independent; a solution for a small planet.

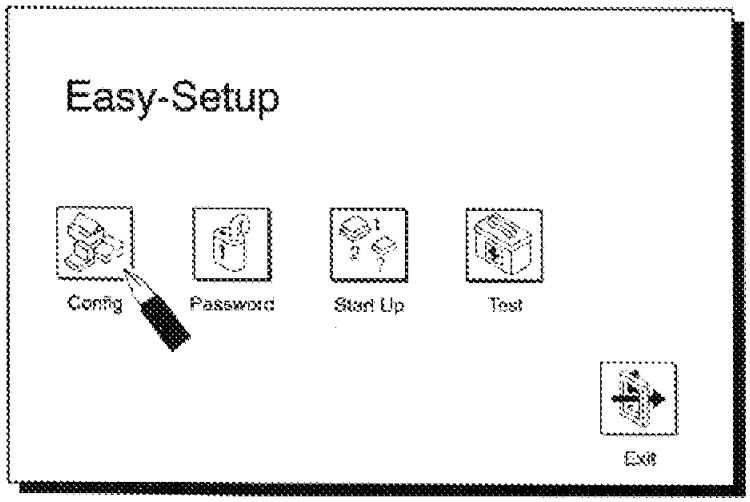

Figure 39. The Easy Setup Screen of an IBM Personal Computer ThinkPad

The following table gives an overview of the tasks that can be performed using either Easy Setup in case of a ThinkPad and System Management in case of a desktop computer.

Table 22 (Page 1 of 2). Easy Setup and System Management Overview

Easy Setup (ThinkPad)	Config	SCSI-ID	View
			Change
	Password	Power-On password	
		Supervisor password [1]	
	Startup sequence	Change	
		Set to default	
	Test	Normal test	
		Super test [1]	
	Exit		

Table 22 (Page 2 of 2). Easy Setup and System Management Overview

System-Management (Desktop)	Sys Config	Display	
		Modify	
	Startup sequence	Change	
		Set to default	
	Test		
	Tools	Power-On password	
		Supervisor password	
		Remote off	
		System info	
		Copy	
		Update	
		Audio	
		Error-log	
		R-IPL	
	Exit		

Note:

1 Press Ctrl+A to activate the choice.

3.11.1 Extended System Management Services

For the Personal Computer Power Series systems an additional level of system management services is available. The Extended System Management Services programs are basically a text-based counterpart to the icon-based system management you start by pressing F1, but also allow for a more in-depth handling of system settings. They can be started by pressing F4 during start.

3.11.2 Network-Based System Management

Pressing F2 during start up allows you to get the system management file from a network server. This is helpful for example for medialess systems that use Remote IPL (R-IPL) to load the operating system from a network. This is an administrative task however, as it involves the knowledge of the system's IP and gateway address as well as the value for the subnet-mask.

Appendix A. System Details by Model Type

A.1 US Systems Details

Table 23 lists the Power Series systems shipped in the US and Canada sorted by model type.

Table 23 (Page 1 of 3). US Systems by Model Type

Model Type	Processor 1		L2 Cache (KB)		Memory (MB)		Hard Disk (MB)			Display 3		OS 5	Note
	Type	MHz	std.	max.	std.	max.	Type	std.	max.	Type	Res.		
6040-0CD	603e	100	256	256	32	48	SCSI	1200	1200	G10	SVGA	-	
-0DD	603e	100	256	256	32	48	SCSI	1200	1200	G10	SVGA	AIX	
-0ED	603e	100	256	256	32	48	SCSI	1200	1200	G10	SVGA	NT	
-06D	603e	100	256	256	32	48	SCSI	810	1200	G10	SVGA	-	
-07D	603e	100	256	256	32	48	SCSI	810	1200	G10	SVGA	AIX	
-08D	603e	100	256	256	32	48	SCSI	810	1200	G10	SVGA	NT	
-966	603e	100	256	256	16	48	SCSI	810	1200	G10	VGA	-	
-986	603e	100	256	256	16	48	SCSI	810	1200	G10	VGA	NT	
-977	603e	100	256	256	32	48	SCSI	810	1200	G10	VGA	AIX	
-006	603e	100	256	256	16	48	SCSI	540	1200	G10	VGA	-	
-026	603e	100	256	256	16	48	SCSI	540	1200	G10	VGA	NT	
-017	603e	100	256	256	32	48	SCSI	540	1200	G10	VGA	AIX	
6042-906	603e	100	256	256	16	80	SCSI	540	1200	MV	VGA	-	
-926	603e	100	256	256	16	80	SCSI	540	1200	MV	VGA	NT	
-9CD	603e	100	256	256	32	96	SCSI	1200	1200	MV	SVGA	-	
-9DD	603e	100	256	256	32	96	SCSI	1200	1200	MV	SVGA	NT	
-96D	603e	100	256	256	32	96	SCSI	810	1200	MV	SVGA	-	
-97D	603e	100	256	256	32	96	SCSI	810	1200	MV	SVGA	AIX	
-98D	603e	100	256	256	32	96	SCSI	810	1200	MV	SVGA	NT	
-967	603e	100	256	256	32	96	SCSI	810	1200	MV	VGA	-	
-977	603e	100	256	256	32	96	SCSI	810	1200	MV	VGA	AIX	
-987	603e	100	256	256	32	96	SCSI	810	1200	MV	VGA	NT	
-9ED	603e	100	256	256	32	96	SCSI	1200	1200	MV	SVGA	NT	
6050-NAA	604	100	256	512	16	192	IDE	540	1000	E15	SVGA	NT	
-0AA	604	100	256	512	16	192	IDE	540	1000	E15	SVGA	-	
-NAD	604	100	256	512	32	192	IDE	1000	1000	E15	SVGA	NT	
-AAD	604	100	256	512	32	192	IDE	1000	1000	E15	SVGA	AIX	

© Copyright IBM Corp. 1996

Table 23 (Page 2 of 3). US Systems by Model Type

Model Type	Processor 1		L2 Cache (KB)		Memory (MB)		Hard Disk (MB)			Display 3		OS 5	Note
	Type	MHz	std.	max.	std.	max.	Type	std.	max.	Type	Res.		
-0AD	604	100	256	512	32	192	IDE	1000	1000	E15	SVGA	-	
-0U0	604	100											2
6070-NAA	604	100	256	512	16	192	IDE	540	3000	E15	SVGA	NT	
-0AA	604	100	256	512	16	192	IDE	540	3000	E15	SVGA	-	
-NAD	604	100	256	512	32	192	IDE	1000	3000	E15	SVGA	NT	
-AAD	604	100	256	512	32	192	IDE	1000	3000	E15	SVGA	AIX	
-0AD	604	100	256	512	32	192	IDE	1000	3000	E15	SVGA	-	
-NAB	604	120	256	512	16	192	IDE	540	3000	E15	SVGA	NT	
-0AB	604	120	256	512	16	192	IDE	540	3000	E15	SVGA	-	
-AAE	604	120	256	512	32	192	IDE	1000	3000	E15	SVGA	AIX	
-0AE	604	120	256	512	32	192	IDE	1000	3000	E15	SVGA	-	
-NAM	604	120	256	512	24	192	IDE	728	3000	E15	SVGA	NT	
-0AN	604	120	256	512	32	192	IDE	728	3000	E15	SVGA	-	
-NAC	604	133	512	512	16	192	IDE	540	3000	E15	SVGA	NT	
-0AC	604	133	512	512	16	192	IDE	540	3000	E15	SVGA	-	
-NAF	604	133	512	512	32	192	IDE	1000	3000	E15	SVGA	NT	
-AAF	604	133	512	512	32	192	IDE	1000	3000	E15	SVGA	AIX	
-0AF	604	133	512	512	32	192	IDE	1000	3000	E15	SVGA	-	
-NA0	604	133	512	512	32	192	IDE	1000	3000	4	SVGA	NT	
-AAP	604	133	512	512	48	192	IDE	1000	3000	4	SVGA	AIX	
-NAQ	604	133	512	512	32	192	IDE	1000	3000	E15	SVGA	NT	
-AAQ	604	133	512	512	32	192	IDE	1000	3000	E15	SVGA	AIX	
-0AQ	604	133	512	512	32	192	IDE	1000	3000	E15	SVGA	-	
-0U0	604	100											2
-0U1	604	120											2

Table 23 (Page 3 of 3). US Systems by Model Type

Model Type	Processor 1		L2 Cache (KB)		Memory (MB)		Hard Disk (MB)			Display 3		OS 5	Note
	Type	MHz	std.	max.	std.	max.	Type	std.	max.	Type	Res.		
-0U2	604	133											2

Note:

1 Processor has 32 KB L1-Cache.

2 These models are building block models

3

- G10 is the standard graphics system for all ThinkPad models.
- MV denotes the G10 graphics with added Motion Video Adapter.
- E15 is the standard graphics system for most of the desktop models.
- S15 and GXT150 and H10 denotes high performance graphics system for specific applications.
- VGA denotes TFT size 640x480 pixel in case of a ThinkPad system.
- SVGA denotes TFT size 800x600 pixel in case of a ThinkPad system and general video support for the desktop models.
- See 2.4.2, "Video Support" on page 24 for details.

4 The GXT150P graphics adapter (see 2.4.2.3, "The GXT150P Graphics Adapter" on page 27) is standard for this model.

5 "-" in this column means that the system does not have an operating system preloaded.

A.2 European (EMEA) Systems Details

Table 24 lists the Power Series systems shipped in Europe sorted by model type.

Table 24 (Page 1 of 3). European Systems by Model Type

Model - Type	Processor 1		L2 Cache (KB)		Memory (MB)		Hard Disk (MB)			Display 3		OS 6	Note
	Type	MHz	std.	max.	std.	max.	Type	std.	max.	Type	Res.		
6040-A1L	603e	100	256	256	16	48	SCSI	540	1200	G10	VGA	NT/-	
-A2L	603e	100	256	256	16	48	SCSI	810	1200	G10	VGA	NT/-	
-A3L	603e	100	256	256	32	48	SCSI	1200	1200	MV	VGA	NT/-	
-B1L	603e	100	256	256	16	48	SCSI	540	1200	G10	SVGA	NT/-	
-B2L	603e	100	256	256	32	48	SCSI	1200	1200	G10	SVGA	NT/-	
-Z1L	603e	100	256	256	16	48	SCSI	540	1200	G10	VGA	AIX	
-Z2L	603e	100	256	256	16	48	SCSI	810	1200	G10	VGA	AIX	
-Z3L	603e	100	256	256	32	48	SCSI	1200	1200	MV	VGA	AIX	
-Y1L	603e	100	256	256	16	48	SCSI	540	1200	G10	SVGA	AIX	
-Y2L	603e	100	256	256	32	48	SCSI	1200	1200	G10	SVGA	-	
-EU0	603e	100											2

Table 24 (Page 2 of 3). European Systems by Model Type

Model - Type	Processor 1		L2 Cache (KB)		Memory (MB)		Hard Disk (MB)			Display 3		OS 6	Note
	Type	MHz	std.	max.	std.	max.	Type	std.	max.	Type	Res.		
-EU1	603e	100											2
-EU2	603e	100											2
-EU3	603e	100											2
-EU4	603e	100											2
-EU5	603e	100											2
6042-A1U	603e	100	256	256	16	80	SCSI	540	1200	MV	VGA	NT/-	3
-A1G	603e	100	256	256	16	80	SCSI	540	1200	MV	VGA	NT/-	3
-A2U	603e	100	256	256	32	96	SCSI	1200	1200	MV	VGA	NT/-	3
-A2G	603e	100	256	256	32	96	SCSI	1200	1200	MV	VGA	NT/-	3
-B1U	603e	100	256	256	32	96	SCSI	810	1200	MV	SVGA	NT/-	3
-B1G	603e	100	256	256	32	96	SCSI	810	1200	MV	SVGA	NT/-	3
-B2U	603e	100	256	256	32	96	SCSI	1200	1200	MV	SVGA	NT/-	3
-Z1U	603e	100	256	256	16	80	SCSI	540	1200	MV	VGA	AIX	3
-Z1G	603e	100	256	256	16	80	SCSI	540	1200	MV	VGA	AIX	3
-Z2U	603e	100	256	256	32	96	SCSI	1200	1200	MV	VGA	AIX	3
-Z2G	603e	100	256	256	32	96	SCSI	1200	1200	MV	VGA	AIX	3
-Y1U	603e	100	256	256	32	96	SCSI	810	1200	MV	SVGA	AIX	3
-Y1G	603e	100	256	256	32	96	SCSI	810	1200	MV	SVGA	AIX	3
-Y2U	603e	100	256	256	32	96	SCSI	1200	1200	MV	SVGA	AIX	3
-Y2G	603e	100	256	256	32	96	SCSI	1200	1200	MV	SVGA	AIX	3
6050-A1L	604	100	256	512	16	192	IDE	540	1000	E15	SVGA	NT/-	
-A2L	604	100	256	512	32	192	IDE	1000	1000	E15	SVGA	NT/-	
-Z1L	604	100	256	512	16	192	IDE	540	1000	E15	SVGA	AIX	
-Z2L	604	100	256	512	32	192	IDE	1000	1000	E15	SVGA	AIX	
-EU0	604	100											2
-EU1	604	100											2
6070-A1L	604	100	256	512	16	192	IDE	540	3000	E15	SVGA	NT/-	
-A2L	604	100	256	512	32	192	IDE	1000	3000	E15	SVGA	NT/-	
-B1L	604	120	256	512	24	192	IDE	728	3000	E15	SVGA	NT/-	
-B2L	604	100	256	512	32	192	IDE	1000	3000	E15	SVGA	NT/-	
-C1L	604	133	512	512	24	192	IDE	728	3000	E15	SVGA	NT/-	
-C2L	604	133	512	512	32	192	IDE	1000	3000	S15	SVGA	NT/-	
-Z1L	604	100	256	512	32	192	IDE	1000	3000	E15	SVGA	AIX	
-Y1L	604	120	256	512	32	192	IDE	1000	3000	E15	SVGA	AIX	
-X1L	604	133	512	512	32	192	IDE	1000	3000	5	SVGA	AIX	
-EU0	604	100											2

Table 24 (Page 3 of 3). European Systems by Model Type

Model - Type	Processor 1		L2 Cache (KB)		Memory (MB)		Hard Disk (MB)			Display 3		OS 6	Note
	Type	MHz	std.	max.	std.	max.	Type	std.	max.	Type	Res.		
-EU1	604	120											2
-EU2	604	133											2
-EU3	604	100											2
-EU4	604	120											2
-EU5	604	133											2

Note:

1 Processor has 32 KB L1 cache.

2 These models are building block models.

3 If the last digit of the type field is U this means a UK version (incl. UK keyboard). If it is a G it means German.

4

- G10 is the standard graphics system for all ThinkPad models.
- MV denotes the G10 graphics with added Motion Video Adapter.
- E15 is the standard graphics system for most of the desktop models.
- S15 and GXT150 and H10 denotes high performance graphics system for specific applications.
- VGA denotes TFT size 640x480 pixel in case of a ThinkPad system.
- SVGA denotes TFT size 800x600 pixel in case of a ThinkPad system and general video support for the desktop models.
- See 2.4.2, “Video Support” on page 24 for details.

5 The GXT150P graphics adapter (see 2.4.2.3, “The GXT150P Graphics Adapter” on page 27) is standard for this model.

6 In EMEA the selection of the preloaded operating system is done by using a different order number. NT/- means that you can either choose NT or no operating system preloaded.

A.3 Japanese Systems Details

Table 25 lists the Power Series systems shipped in Japan and Asia/Pacific countries sorted by model type.

Table 25 (Page 1 of 2). Japanese Systems by Model Type

Model - Type	Processor 1		L2 Cache (KB)		Memory (MB)		Hard Disk (MB)			Display 3		OS 4	Note
	Type	MHz	std.	max.	std.	max.	Type	std.	max.	Type	Res.		
6040-G66	603e	100	256	256	16	48	SCSI	810	1200	MV	VGA	-	
-966	603e	100	256	256	16	48	SCSI	810	1200	MV	VGA	-	2
-G77	603e	100	256	256	32	48	SCSI	810	1200	MV	VGA	AIX	
6042-G6D	603e	100	256	256	32	96	SCSI	810	1200	MV	SVGA	-	
-96D	603e	100	256	256	32	96	SCSI	810	1200	MV	SVGA	-	2
-G7D	603e	100	256	256	32	96	SCSI	810	1200	MV	SVGA	AIX	

Table 25 (Page 2 of 2). Japanese Systems by Model Type

Model - Type	Processor 1		L2 Cache (KB)		Memory (MB)		Hard Disk (MB)			Display 3		OS 4	Note
	Type	MHz	std.	max.	std.	max.	Type	std.	max.	Type	Res.		
6050-0JD	604	100	256	256	32	192	IDE	1080	1080	E15	SVGA	-	
-AJD	604	100	256	256	32	192	IDE	1080	1080	E15	SVGA	AIX	
6070-0JD	604	100	256	256	32	192	IDE	1080	3200	E15	SVGA	-	
-AJD	604	100	256	256	32	192	IDE	1080	3200	E15	SVGA	AIX	
-0JE	604	120	256	256	32	192	IDE	1080	3200	E15	SVGA	-	
-AJE	604	120	256	256	32	192	IDE	1080	3200	E15	SVGA	AIX	
-0JF	604	133	512	512	32	192	IDE	1080	3200	E15	SVGA	-	
-AJF	604	133	512	512	32	192	IDE	1080	3200	E15	SVGA	AIX	

Note:

1 Processor has 32 KB L1-Cache.

2 All Japanese models have a Japanese keyboard except this one.

3

- G10 is the standard graphics system for all ThinkPad models.
- MV denotes the G10 graphics with added Motion Video Adapter.
- E15 is the standard graphics system for most of the desktop models.
- S15 and GXT150 and H10 denotes high performance graphics system for specific applications.
- VGA denotes TFT size 640x480 pixel in case of a ThinkPad system.
- SVGA denotes TFT size 800x600 pixel in case of a ThinkPad system and general video support for the desktop models.
- See 2.4.2, “Video Support” on page 24 for details.

5 ”-” in this column means that the system does not have an operating system preloaded.

Appendix B. POST and Diagnostic Error Codes

B.1 POST Error Codes for ThinkPad Power Series Systems

There are two groups of POST error codes depending on the severity of the error. For the less severe error group, POST displays the error code for several seconds; then continues the POST operation (soft error). The soft errors as well as other errors like hard POST errors and diagnostic errors are logged.

To see the error log, do the following:

1. Press and hold F1; then turn on the computer to start Easy-Setup. Hold F1 until the Easy-Setup menu appears.
2. After the Easy-Setup menu appears, press Ctrl+E.
3. The error log screen appears.

   The first error is displayed at the top of the list. Each error entry contains time, error code, and location. The time shows, when the error was detected in Greenwich mean time (GMT) form. The error code can be from soft or hard POST errors or diagnostic errors. The location shows the problem area in the computer.

Use the logged error codes to determine the problem of this group.

The logged errors are cleared when you exit Easy-Setup. For the hard error group, POST stops with the error code displayed. Note the error code and device name then press Enter. The Easy-Setup screen appears automatically so that you can run the tests. If an error was detected by the test, go to B.2, “Diagnostic Error Codes for ThinkPad Power Series Systems” on page 141. If no error was detected, use the POST error code you noted, and find your error code in the column on the left; then do the actions in the column on the right. In the charts, x can be any character.

Table 26 on page 140 lists the POST error codes for the ThinkPad Power Series systems 820 and 850..

© Copyright IBM Corp. 1996

Table 26 (Page 1 of 2). POST Error Codes	
POST Error Codes	**Action**
00016xxx 00017xxx	A hardware error was detected in the system board. Have the computer serviced.
0002xxx0	A memory hardware error was detected. Have the computer serviced.
0003xxx0	A keyboard hardware error was detected. Ensure that no keys of the internal or external keyboard are pressed when the POST is running. If the above is correct, have the computer serviced.
0086xxx0	A mouse hardware error was detected. Have the computer serviced.
0208xxx0	An unrecognized SCSI drive was detected. Isolate the drive by doing the following: 1. Turn off the computer and remove all external SCSI drives from the computer. 2. Turn on the computer to get the POST results. 3. Turn off the computer and remove all internal SCSI drives. 4. Turn on the computer to get the POST results. If the error disappears in step 2, the external drive was not recognized. See the manual for the drive to determine the problem. If the error disappears in step 4, the internal drive was not recognized. Have the drive serviced. If you still get the same error, have the computer serviced.
02xx0290	A drive not available error was detected for the SCSI drive shown by the error drive ID. Verify that: • The drive is turned on. • The drive is not offline. Have the drive serviced.
02xx0730	A drive ID conflict was detected with the SCSI drive. If this error appears after you have added a new SCSI drive, the ID of the drive conflicts with an existing SCSI ID. Reset the drive ID so that it does not conflict with other SCSI IDs. To verify the drive ID setting, see the manual for the drive. If this error occurs on a drive that is being used, have the drive serviced.

Table 26 (Page 2 of 2). POST Error Codes	
POST Error Codes	**Action**
02xxxxxx	A SCSI drive error was detected. Isolate the drive by doing the following: 1. Turn off the computer and all external SCSI drives, and then remove all external SCSI drives from the computer. 2. Turn on the computer to get the POST results. 3. Turn off the computer and remove all internal SCSI drives.. 4. Turn on the computer to get the POST results. If the error disappears in step 2, suspect one of the external SCSI drives. Connect the drive one by one to isolate the problem to one drive. If the error disappears in step 4, suspect one of the internal drives. Connect the drive one by one to isolate the problem to one drive. If you still get the same error code, suspect a problem with the computer. Have the suspected drive or the computer serviced.
xxxxxxxx All error codes other than the ones listed above.	Have the computer serviced.

B.2 Diagnostic Error Codes for ThinkPad Power Series Systems

Table 27 lists the Diagnostic error codes for the ThinkPad Power Series systems 820 and 850.

Table 27 (Page 1 of 3). Diagnostic Error Codes	
Diagnostic Error Codes	**Action**
001xxxx	A computer system error was detected. Have the computer serviced.
00210y0	A memory error was detected. If y is 2, remove the IC DRAM card from the left slot under the hard disk drive. If y is 3, remove the IC DRAM card from the right slot. Run the test again. If the test runs with no error, suspect the removed IC DRAM card. If the error code remains with no IC DRAM cards in the slots, or y is other than 2 or 3, have the computer service.

Table 27 (Page 2 of 3). Diagnostic Error Codes	
Diagnostic Error Codes	**Action**
003xxxx	A keyboard error was detected. If any key is pressed during the test, failures will occur. If no keys were pressed, have the computer serviced.
006xxxx	A diskette drive error was detected. Attach the diskette drive to the internal connector instead of the CD-ROM drive, and run the test again. If the same error code remains, have the diskette drive serviced. If no error code appears, the problem occurs only when the drive is connected externally. Have the computer and the drive serviced.
00110001	A serial port disabled error was detected. Remove the serial device from the serial connector, and run the test again. If the same error occurs, have the system serviced. If the error disappears, have the serial device serviced.
0011xxxx	A serial port error was detected. Have the system serviced.
0014xxxx	A parallel port disabled error was detected. Remove the parallel device from the parallel connector, and run the test again. If the same error remains, have the computer serviced. If the error disappears, have the parallel device serviced.
0024xxx	A video error was detected. Have the computer serviced.
0037xxx0	A SCSI controller error was detected. Have the computer serviced.
0080xxxx	A PCMCIA controller error was detected. Verify that no PC Cards are inserted during the test, and if so, have the computer serviced.
0086xxxx	A mouse error was detected. If an external mouse is connected, remove it and run the test again. If the same error remains, have the computer serviced. If the error disappears, check the compatibility of the mouse, and then have the mouse serviced.

Table 27 (Page 3 of 3). Diagnostic Error Codes	
Diagnostic Error Codes	**Action**
01291xxx	A L2 cache error was detected. Have the computer serviced.
0208xxx0	An unrecognized SCSI device error was detected. Isolate the drive by doing the following: 1. Turn off the computer and remove all external SCSI drives from the computer. 2. Turn on the computer and run the test to get the results. 3. Turn off the computer and remove all internal SCSI drives. 4. Turn on the computer and run the test to get the results. If the error disappears in step 2, the external drive was not recognized. See the manual for the drive to determine the problem. If the error disappears in step 4, the internal drive was not recognized. Have the drive serviced. If you still get the same error code after removing all SCSI devices, have the computer serviced.
0210xxx0	A SCSI hard disk drive error was detected. Hve the drive serviced.
0125xxx0	A SCSI CD-ROM drive error was detected. Have the drive serviced.
021xxxx0	All other SCSI drive errors. Do the action of the 0208xxx0 error.
0243xxx0	A video error was detected. Have the computer serviced.
0250xxxx	An audio error was detected. Have the computer serviced.
10EDxxxx	A video error was detected. Have the computer serviced.
Any code other than the ones listed above	Have the computer serviced.

B.3 Error Codes for Personal Computer Power Series Systems

Each time you turn on the computer, it performs a series of basic tests that check its ability to start. These following tests are performed:

- Check basic system operations
- Check the memory operations
- Start the video operation
- Verify that the diskette, hard disk, and CD-ROM drives are working
- Check the keyboard

If the startup tests detect an error, an error message appears. Make a note of it and of all the symptoms you observe. Then check Table 28 to see if there is any specific action you should take. You may have to run additional tests from the system management services diskette to get more information about the source of the problem.

To start the tests:

- Insert the system management services diskette in the drive
- Turn on or restart the computer
- As soon as the first screen appears, press F1 key

  Note:

  – You must press F1 after the keyboard icon appears on the screen, but before the last icon appears.

  – If you press F1 without inserting the system management services diskette, a graphic of a diskette moving toward the drive will appear on the screen. Insert the system management services diskette and press Enter or the Spacebar.

Table 28 lists the error codes for the Personal Computer Power Series systems 830 and 850.

Table 28 (Page 1 of 7). Error Codes

Code	Description	Action
00010000	Microprocessor problem.	Have the computer serviced.
00015xxx	System board problem.	Have the computer serviced.
00016000	System board problem.	Have the computer serviced.

Table 28 (Page 2 of 7). Error Codes		
Code	**Description**	**Action**
00016002	System board problem.	Have the computer serviced.
00016003	Unattended start mode is locked.	Turn your computer off and then back on; then try setting unattended start mode again.
00016004	Supervisor password is locked.	Turn your computer off and then back on; then try setting the password again.
00016005	Supervisor password is locked.	Turn your computer off and then back on; then try setting the password again.
00017001	Non-volatile memory error due to low battery.	Replace the battery.
00017002	Non-volatile memory error; data gone.	Replace the battery, if you haven't already done so. Restore NVRAM data (for example: password and startup sequence).
00017003	Power interruption while updating startup sequence.	Try again.
0001700x	Attempts to enter correct password exceeded allowed number.	Turn power off; then try again with correct password.
00017013	You need a power-on password to enable unattended start mode.	Enter power-on password and try again.
00018000	System board problem.	Run memory tests.
00020000	Memory error.	Run memory tests.
000210x0	Memory error during testing (x = memory module slot 1 - 6).	Have the computer serviced.
000300xx	Keyboard problem.	Have the computer serviced.
00030050	Keyboard problem.	You may have a key pressed during testing. Rerun the test. If problem persists, replace the keyboard and test again. If problem still persists, call for service.
00031100	Keyboard is in wrong port.	Connect keyboard to correct port.
00031200	Keyboard is not attached.	Connect the keyboard.
00031300	Keyboard interrupt not registered.	none
0006xxx0	Diskette drive/media problem.	Try with different media. If problem persists, call for service.

Table 28 (Page 3 of 7). Error Codes		
Code	**Description**	**Action**
0011xxxx	Serial port problem.	Have the computer serviced.
0014xxxx	Parallel port problem.	Have the computer serviced.
00370830	SCSI breaker.	Turn power off and allow 15 minutes for the breaker to reset. Rerun the test. If the problem persists, have the computer serviced.
0037xxxx	SCSI problem	Call for service.
008600xx	Mouse problem	If xx is 50, you may have pressed a key or moved the mouse during testing. Rerun the test. If problem persists, replace the mouse and test again. If problem still persists, call for service.
0129xxxx	L2 cache problem.	Have the computer serviced.
0166xxxx	Token-ring adapter problem.	Call for service.
0208xxxx	SCSI subsystem problem. **1**	Call for service.
0209xxxx	SCSI subsystem problem. **1**	Replace the diskette or CD-ROM and try again. If problem still persist, call for service.
0210xxxx	SCSI subsystem problem. **1**	Call for service.
0211xxxx	SCSI subsystem problem. **1**	Replace the diskette or CD-ROM and try again. If problem still persists, call for service.
0212xxxx	SCSI subsystem printer problem. **1**	Refer to the documentation that came with your printer for additional information and try again. If problem still persist, call for service.
0213xxxx	SCSI subsystem problem. **1**	Call for service.
0214xxxx	SCSI subsystem WORM device. **1**	
0215xxxx	SCSI subsystem CD-ROM drive. **1**	Replace the CD-ROM media and try again. If problem still persists, call for service.
0216xxxx	SCSI subsystem scanner device. **1**	Refer to the documentation that came with your scanner for additional information and try again. If problem persists, call for service.

Table 28 (Page 4 of 7). Error Codes		
Code	**Description**	**Action**
0217xxxx	SCSI subsystem optical device. 1	Make sure the media is present and write enabled, or try a new media. Refer to the documentation that came with your optical drive for additional information and try again. If problem still persists, call for service.
0218xxxx	SCSI subsystem CD-ROM device. 1	Make sure the media is present or use a new media. Refer to the documentation that came with your device and try again. If the problem still persists, call for service.
0219xxxx	SCSI subsystem communication device. 1	Refer to the documentation that came with your device for additional information and try again. If problem still exist, call for service.
0243xxxx	Graphics adapter problem.	Replace the graphics adapter.
0250100x	Audio problem.	Have the computer serviced.
0265xxxx	Ethernet adapter problem.	Have the computer serviced.
0267xxxx	Integrated Ethernet problem	Have the computer serviced.
0849xxxx	X.25 interface problem	Have the computer serviced.
0942xxxx	Graphics adapter problem.	Have the computer serviced.
50001100	System firmware is different level from the System Management Services program.	Update the system firmware.
5333000x	Graphics adapter problem	Replace the graphics adapter.
80001100	Firmware update program could not be found on the diskette, or the diskette is not inserted in the drive.	Verify that you have the correct System Management Services diskette or CD, and that it is inserted correctly in the drive; then try again.
80001200	The firmware recovery information could not be written to the diskette.	Verify that you have a correctly formatted diskette; then try again.
80001300	The firmware-update file is the same level as the system firmware. The update is canceled.	Verify that you have the correct level of the firmware-update file; then try again.

Table 28 (Page 5 of 7). Error Codes		
Code	**Description**	**Action**
80001400	The firmware-update file does not support this system. The update is canceled.	None.
80001500	The firmware-update file on the current drive is unreliable. The update is canceled.	Obtain a reliable update file; then try again.
80001600	The firmware-update file could not be found on the current drive. the update is cancelled.	Verify that you have the correct firmware update diskette; then try again.
80001700	The firmware update file on the current drive is unreliable. The update is cancelled.	Verify that you have the correct firmware update diskette; then try again.
80001800	A valid firmware-update file could not be found on the current drive. The update is cancelled.	Verify that you have the correct firmware update diskette; then try again.
80001900	The firmware-update file does not support this system. The update is cancelled.	Verify that you have the correct firmware update diskette; then try again.
80002000	More than one firmware-update file was found on the current drive. The update is cancelled.	Try again with a firmware update diskette that contains only one firmware-update file.
80002100	The firmware-update file could not be loaded from the current drive. The update is cancelled.	Verify that you have the current firmware update diskette; then try again.
80002200	The firmware-update module is write protected. The update is cancelled.	None.
80002300	This version of the update utility does not support this system. The update is cancelled.	Verify that you have the correct version of the System Management Services diskette or CD-ROM; then try again.
80002400	The firmware-update module is not supported. The update is cancelled.	Verify that you have the correct version of the System Management Services diskette or CD; then try again.
80002500	The firmware-update module is not supported. The update is cancelled.	Verify that you have the correct version of the System Management Services diskette; then try again.

Table 28 (Page 6 of 7). Error Codes		
Code	**Description**	**Action**
80002600	The firmware-update module is write protected.	Turn the computer off and then on. Start the System Management Services programs again. If the problem persists, call for service.
8000270	The backup recovery diskette is not inserted in the drive.	Try again and be sure to insert the backup recovery diskette when prompted.
80002800	The Firmware Update diskette is not inserted in the drive.	Insert the Firmware Update diskette; then try again.
90001100	No diagnostic files where found.	Verify that you have the correct option diskette; then restart the program.
90001200	No diagnostic files found.	Verify that you have the correct option diskette; then try again.
90001300	Could not copy the diagnostic files.	Insert the System Management Services diskette or CD; then restart the program.
90001400	The diskette is write protected. Could not copy diagnostic files.	Disable write protection and try again.
90001500	Could not copy diagnostic files. Error while trying to write to diskette, or insufficient memory.	None.
90001600	Not enough diskette space on the System Management Services diskette to copy all diagnostic files.	Create room on the System Management Services diskette by removing unneeded option diagnostic files; then try again.
91001100	Insufficient memory.	Add memory or free memory; then try again.
91001200	Incorrect IP format for the client IP address.	Correct the IP address format; then try again.
91001300	Incorrect IP format for the server IP address.	Correct the IP address format; then try again.
91001400	Incorrect format for the gateway IP address.	Correct the IP address format; then try again.
91001500	Incorrect IP address for netmask.	Correct the IP address format; then try again.
91001600	Error writing NVRAM.	Try again.

Table 28 (Page 7 of 7). Error Codes		
Code	**Description**	**Action**
91001700	Ethernet adapter not found.	Make sure the adapter is configured correctly.
91001800	Unable to update EEPROM.	
91001900	Token-ring adapter not found.	Make sure the adapter is configured correctly.
91002000	No network adapters recognized.	Make sure the adapters are configured correctly.
91002100	The file ping.6xe was not found.	
91002200	Ping failed.	

Note:

1 If you are using the Enhanced Systems Management Services Programs, the error code might include a FRU Code entry. If so, see SCSI Device FRU Code Information to determine the specific device the code is referring to.

B.4 SCSI Device FRU Code Information for Personal Computer Power Series Systems

Some SCSI device error messages include FRU code references (FRU = field replaceable unit). These codes identify specific SCSI devices.

Table 29 describes these codes.

Table 29 (Page 1 of 2). SCSI Device FRU	
Code	**Location**
B	Rewritable optical drive
C	CD-ROM drive 1
D	CD-ROM drive 2
E	Enhanced CD-ROM 2
F	Enhanced CD-ROM 2
H	Enhanced CD-ROM 2
M	2 GB, 68-pin hard disk drive
N	540 MB hard disk drive
O	1 GB hard disk drive

Table 29 (Page 2 of 2). SCSI Device FRU	
Code	**Location**
P	2 GB hard disk drive
Q	540 MB hard disk drive
W	540 MB hard disk drive
b	728 MB hard disk drive
U	Size or device type is unknown

Appendix C. Power Specifications

C.1 Power Specifications for the Personal Computer Power Series Systems

The following gives you some details on the specifications that is voltage and voltage regulation of the power supply and the current distribution within the Personal Computer Power Series systems.

Power Supply Data: The power requirements for the Personal Computer Power Series systems is supplied by a 200 watts Energy Star compliant power supply. The supply converts the two major world wide AC (Alternating Current) voltages into six DC (Direct Current) voltage levels. The low range, used for example in the US for the 110 VAC outlets is 100-125 VAC. The high range used for example in most European countries for their 220 VAC outlets is 200-240 VAC. A manual switch is used to select the proper voltage range.

Important

Always make sure that in case you are using your computer in a country that has the higher voltage level, the selector switch is set properly. Otherwise the computer may get severely damaged. Also the computer will not be damaged if the switch is set to the higher level an your using it in a country that has the lower voltage level, it might not work.

The power supply responds to an on/off signal to control the AC line and turns the power supply on and off. This means that the power switch is actually not a breaker switch but a key switch that signals to the power supply to switch AC on and off. The power supply is off for a signal voltage of +2.5 volt or higher and on for a voltage of +1.0 volt or lower. A power good signal is provided to reset system logic, indicate proper operation of the power supply and give a 10 ms minimum advance warning of impending loss of regulation at turn off.

© Copyright IBM Corp. 1996

Table 30. Power Supply Input Voltage Range for the Personal Computer Power Series			
Range	**Nominal Voltage (V)**	**Min. Voltage (V)**	**Max. Voltage (V)**
Low range	100 - 125	90	137
High range	200 - 240	180	265

C.1.1 Personal Computer Power Series 830 Power Supply Ratings

Table 31 shows the power ratings for the Personal Computer Power Series system 830 power supply.

Table 31. 100 Watts Power Supply Output			
Nominal Output Voltage (V)	**Regulation Limits**	**Min. Current (A)**	**Max. Current (A)**
+5	+5% -4%	1.5	18.0 (see note)
+3.3	+5% -4%	0.0	18.0 (see note)
+12	+5% -5%	0.0	3.0
-12	+10% -9%	0.0	0.5
-5	+10% -10%	0.0	0.5
+5 (aux.)	+5% -10%	0.0	0.02 (always on)
Note: The total power consumption on the 3.3 and 5 volt outlets must not exceed 90 Watts.			

C.1.2 Personal Computer Power Series 850 Power Supply Ratings

Table 32 shows the power ratings for the Personal Computer Power Series system 850 power supply.

Table 32. 200 Watts Power Supply Output

Nominal Output Voltage (V)	Regulation Limits	Min. Current (A)	Max. Current (A)
+5	+5% -4%	1.5	20.0 (see note)
+3.3	+5% -4%	0.0	20.0 (see note)
+12	+5% -4%	0.0	3.0
-12	+10% -9%	0.0	0.5
-5	+5% -5%	0.0	0.5
+5 (aux.)	+5% -10%	0.0	0.02 (always on)

Note:

The total power consumption on the 3.3 and 5 volt outlets must not exceed 100 Watts.

C.1.3 Personal Computer Power Series Adapter Slot Power Allocation

Table 33 shows the power ratings allocated to the individual slot.

Table 33. Personal Computer Power Series Adapter-Slot Power Allocation

Machine Type	Box Type (Slot x Spindle)	Average Slot Power Allocation	Total System Slot Allocation
6050 (Personal Computer and ThinkPad Power Series 830)	3 x 3	12 Watts per slot	36 Watts
6070 (Personal Computer and ThinkPad Power Series 850)	5 x 5	8 Watts per slot	40 Watts

Note:

The power allocation per slot is calculated using a system with 192 MB system memory, a 133 MHz processor, and a heavily active hard disk. The Personal Computer Power Series does not check the adapter-present signals on the PCI bus to determine the power level of an adapter option.

C.2 Power Specifications For the ThinkPad Power Series Systems

- AC Adapter: Sine-wave input with 50 to 60 Hz is required.
  - 100 - 125 volt AC
  - 200 - 240 volt AC
- Battery Pack
  - NiMH, Intelligent (microprocessor controlled) battery
  - Output voltage : 9.6 volt DC
  - Nominal current : 3300 mA

Appendix D. Adapters and Features

D.1 Adapters and Features for US Systems

This section describes the adapters supported in the IBM Personal Computer Power Series and the IBM ThinkPad Power Series systems (US).

Table 34 shows the supported optional adapters and features.

Table 34 (Page 1 of 3). Options and Features Supported in the Personal Computer Power Series (US)

Category	Description	Part-number	Remark (Max./bus/others)
Memory	4 MB Memory Module	92G7201	SIMM/Pair use
	8 MB Memory Module	92G7520	SIMM/Pair use
	16 MB Memory Module	92G7204	SIMM/Pair use
	32 MB Memory Module	92G7206	SIMM/Pair use
Graphics adapter	S15 Graphics Adapter	11H5303	PCI
	H10 Graphics Adapter	11H5315	PCI/NT only
	Power GXT150P Graphics Adapter	8185425	PCI
	Cable, 13W3 with ID-Bits	96G2689	
	Cable, 13W3 to 15-pin DShell	52G3255	
Communication options	4/16 MB Token Ring Adapter	92G7632	ISA/Short length
	Ethernet adapter	48G7169	ISA/Short length
	X.25 Interface Co-Processor	48G7169	ISA/Supported on AIX Version 4 for clients only. Requires AIXLINK X.25 ordered separately.
	X.25 Cable V.24	16F1869	
	X.25 Cable V.21	16F1865	
	X.25 Cable V.35	16F1871	

© Copyright IBM Corp. 1996

Table 34 (Page 2 of 3). Options and Features Supported in the Personal Computer Power Series (US)

Category	Description	Part-number	Remark (Max./bus/others)
Internal IDE Options	540 MB IDE Hard Disk Drive	06H7141	
	728 MB IDE Hard Disk Drive	70G8511	
	1 GB IDE Hard Disk Drive	94G3186	
	Desktop Hard Drive installation Kit	94G3186	
Internal SCSI-2 Options	540 MB SCSI-2 Hard Disk Drive	94G2441	
	1 GB SCSI-2 Hard Disk Drive	94G3187	
	2.25 GB SCSI-2 Hard Disk Drive	94G3054	
	4/10 GB 4-mm SCSI-2 Tape Drive	8185415	
	SCSI-2 CD-ROM-4X	0687648	
External SCSI-2 Enclosures and Cables	External 3510 SCSI Enclosure	64F4417	
	External SCSI-2 Fast/Wide Cable	70G9858	16-bit Card-to-Device
	SCSI-2 Extension Cable	32G3917	Device-to-Device/short length
	SCSI-2 Extension Cable	6451042	Device-to-device/long length
	SCSI Active Terminator	32G3919	
Diskette Drive Options	1.44 MB 3.5-inch Diskette Drive	70G8499	
	1.2 MB 5.25-inch Diskette Drive	70G8500	PC Power Series 850 only (not bootable)
Mouse Option	PS/2 Mouse (2-button)	92G7457	
Miscellaneous adapters/items	8-port Asynchronous ISA Adapter	11H5966	ISA
	512 KB L2 Cache	40H4144	

Table 34 (Page 3 of 3). Options and Features Supported in the Personal Computer Power Series (US)			
Category	**Description**	**Part-number**	**Remark (Max./bus/others)**
	Video Capture Enhancement	52G0733	Daughter card on S15/H15
	Personal Microphone	12H1504	
	Amplified Speakers	12H1464	

Table 35 (Page 1 of 2). Options and Features for the ThinkPad Power Series (US)			
Category	**Description**	**Part number**	**Remark (Max./bus/others)**
Memory	IBM 4 MB IC DRAM	92G7238	70ns/5Volt/Parity
	IBM 8 MB IC DRAM	92G7241	70ns/5Volt/Parity
	16 MB IC DRAM	92G7234	70ns/5volt/Parity
	IBM 32 MB IC DRAM	92G7235	70ns/5volt/Parity
PCMCIA Adapter	IBM 10Base2 Ethernet Credit Card Adapter	0934330	Single pack
	IBM 10Base2 Ethernet Credit Card Adapter	92G9644	5 pack
	IBM 10BaseT Ethernet Credit Card Adapter	0934331	Single pack
	IBM 10Base2 Ethernet Credit Card Adapter	92G9634	5 pack
	IBM Token-ring Auto 16/4 Credit Card	04H6922	Single pack
	IBM Token-ring Auto 16/4 Credit Card	92G9349	5 pack
	IBM Token-Ring Auto 16/4 Credit Card	13H7359	
	IBM PCMCIA 14.4/14.4 Data/FAX Modem	73G7097	
Other features	IBM ThinkPad Key Guard	49G2169	
	IBM ThinkPad Keyboard and Mouse cable	49G2169	
	IBM PS/2 Miniature Miniature Mouse	07G0033	

Table 35 (Page 2 of 2). Options and Features for the ThinkPad Power Series (US)			
Category	**Description**	**Part number**	**Remark (Max./bus/others)**
External SCSI-2 Hard Disk Drive	SCSI-2 1 GB Hard Drive Disk	94G3187	Requires enclosure/SCSI-2 Cable/Active Terminator
	SCSI-2 2GB Hard Disk Drives	94H3054	Required the Enclosure/SCSI-2 Cable/Active Terminator
	External SCSI Enclosure	35100V0	
	SCSI-2 Cable Adapter-to-Device	8185230	
	SCSI Active Terminator	32G3919	
	SCSI-2 Cable Device-to-Device - Long	6451042	
	SCSI-2 Cable Device-to-Device - Short	32G3917	

D.2 Adapters and Features for Japanese Systems

This section describes the adapters supported in the IBM Personal Computer Power Series and the IBM ThinkPad Power Series systems (Japan).

Table 36 shows the supported optional adapters and features.

Table 36 (Page 1 of 2). Options and Features Supported in the Personal Computer Power Series (Japan)			
Category	**Description**	**Part number**	**Remark (Max./bus/others)**
	8 MB Memory Module	85G5276	70 ns/SIMM/Pair use
	16 MB Memory Module	85G5277	70 ns/SIMM/Pair use
	32 MB Memory Module	85G5278	70 ns/SIMM/Pair use
Graphics adapter	S15 Graphics Adapter	85G5268	WT9100 2 MB/PCI
	H10 Graphics Adapter	85G5269	WT9100 4 MB/PCI/NT only
	Power GXT150P Graphics Adapter	85G5270	PCI

Table 36 (Page 2 of 2). Options and Features Supported in the Personal Computer Power Series (Japan)

Category	Description	Part number	Remark (Max./bus/others)
	Cable, 13W3 with IDBits	85G5274	
	Cable, 13W3 to 15-pin Dshell	85G5275	
Communication options	4/16 MB Token Ring Adapter	85G5287	ISA/Short length
	Ethernet Adapter	35G2799	10Base5/T /ISA/Short length
	1 GB IDE Hard Disk Drive	85G5435	
	Desktop Hard Drive Installation Kit	94G3186	
Internal SCSI-2 Options	SCSI-2 Fast/Wide PCI Adapter	85G5271	
	SCSI-2 Cable II	70G9859	
	4 GB 4-mm SCSI-2 Tape Drive	74G6831	
	Internal Converter for SCSI-II	32G3925	
	SCSI Active Terminator	32G3919	
Mouse Option	PS/2 Mouse (2-button)	84G9131	
	AIX Mouse (3-button)	84G5284	
Keyboard	5576-A01 Keyboard	5576A01	106-key Keyboard / without cable
	5576B01 Keyboard	5576B01	106-key Keyboard / with cable
	PS/2 Keyboard	92G7453	101-key Keyboard / with cable
	Keyboard cable for 5576A01	79F5574	
Miscellaneous adapters/items	8-Port Asynchronous ISA Adapter	85G5272	ISA
	Video Capture Enhancement	85G5281	Daughter card on S15/H15

Table 37 (Page 1 of 2). Options and Features Supported in the ThinkPad Power Series (Japan)			
Category	**Description**	**Part number**	**Remark (Max./bus/others)**
Memory	IBM 4 MB IC DRAM for Thinkpad 850	92G7238	70ns/5Volt/Parity
	IBM 8 MB IC DRAM for ThinkPad 850	92G7241	70ns/5Volt/Parity
	16 MB IC DRAM for ThinkPad 850	92G7234	70ns/5volt/Parity
	32 MB IC DRAM for ThinkPad 850	92G7235	70ns/5volt/Parity
	8 MB IC DRAM for ThinkPad 820	84G6541	70ns/5volt/Parity
	16MB IC DRAM for ThinkPad 820	84G4351	70ns/5volt/Parity
PCMCIA Adapter	IBM 10Base2 Ethernet Credit Card Adapter	0934624	Single pack
	IBM 10BaseT Ethernet Credit Card Adapter	0934625	Single pack
	IBM Token-Ring Auto 16/4 Credit Card	0934446	Single pack
	IBM PCMCIA Modem	85G1255	Data/Fax 14.4KB
	IBM PCMCIA Data Fax/Modem	66G0900	Data/Fax 9600/2400 bps
Other features	IBM ThinkPad Key Guard	49G2169	
	IBM ThinkPad keyboard and mouse cable	07G3793	
	IBM PS/2 Miniature Mouse	07G3159	
	IBM AIX Mouse	30H1521	3 button
	Numerical Key-Pad III	79F6408	10key
Keyboard	5576A01 Keyboard	5576A01	106-key keyboard / without cable
	5576B01 Keyboard	5576B01	106-key keyboard / with cable
	Keyboard cable	07G3033	Required 5576A01 Keyboard
Internal Hard Disk	810 MB Disk Pack	30H1396	
	1.2 GB Disk Pack	30H1469	

Table 37 (Page 2 of 2). Options and Features Supported in the ThinkPad Power Series (Japan)			
Category	**Description**	**Part number**	**Remark (Max./bus/others)**
Miscellaneous adapters/items	CCD Video Camera for ThinkPad 850	85G5449	
	NiMH Battery Pack for ThinkPad 850	85G5412	
	Battery Quick Charger for ThinkPad 850	85G2670	
	NiMH Battery Pack for ThinkPad 820	30H1372	
	Travel Quick Charger for ThinkPad 820	30G1384	

Appendix E. IRQ and DMA-Channel Assignments

E.1 IRQ Assignments for the IBM Personal Computer Power Series Systems

This appendix lists the interrupt-request (IRQ) and direct-memory-access (DMA)-channel assignments for the Personal Computer Power Series systems.

Note: If you install ISA adapters in your computer, be sure that no interrupt or DMA channel assignment conflicts with existing resources. For example, do not set an ISA adapter to use interrupt (IRQ) 15, because IRQ15 is used by the PCI adapters.

Table 38 shows the interrupt-request assignments for the Personal Computer Power Series systems 830 and 850.

Table 38 (Page 1 of 2). IRQ Assignments

IRQ	Description
0	Interval timer
1	Keyboard
2	Cascade from controller 2
3	Serial port 2
4	Serial port 1
5	Parallel port 2 or IRQA Audio
6	Diskette drive
7	Parallel port 1 or IRQB Audio
8	Real time clock
9	Unassigned or IRQC Audio
10	Unassigned
11	Unassigned or IRQD Audio
12	Mouse or IRQE Audio
13	EIDE Controller (Primary,Secondary); Power Management; Scatter/Gather
14	Unassigned or IRQF Audio

© Copyright IBM Corp. 1996

Table 38 (Page 2 of 2). IRQ Assignments	
IRQ	**Description**
15	PCI systems and adapters

Note:

Interrupt 9, 11, and 14 are available for the ISA bus adapters. In addition, interrupt 5 or 7 also might be available, depending on how the operating system has configured the parallel ports (OS/2 Warp does not require an interrupt assigned to the parallel port).

IRQA thru F: Audio only needs one interrupt unless using simulation recording and playback, then 2 interrupts are needed.

E.2 DMA-Channel Assignments for the IBM Personal Computer Power Series Systems

Table 39 shows the DMA-channel assignments for the Personal Computer Power Series systems 830 and 850.

Table 39. DMA-Channel Assignment	
DMA Channel	**Description**
0	Audio 2 or ECP
1	Audio 1 or ECP
2	Diskette Drive Controller
3	Audio 2 or ECP
4	Cascade in SIO
5	ECP
6	Primary EIDE
7	Secondary EIDE

Note:

DMA operations can be performed only between ISA or system board devices and ISA memory, PCI memory, or system memory.

Audio needs up to 2 channels, the second one can be mapped DMA channel 0 or 3. ECP needs only one channel 0, 1, or 3.

E.3 System Registers for the IBM Personal Computer Power Series Systems

Table 40 lists the system registers for the Personal Computer Power Series systems 830 and 850.

Table 40 (Page 1 of 2). System Registers

Port Number	System Register
0060	Keyboard Controller Register
0061	NMI Status and Control Register
0064	Keyboard Commands/Status Registers
0070	Real-Time Clock Address and NMI Enable Register
0071	L2-Cache Error Read and Clear Register
0074	NVRAM Address Strobe 0
0075	NVRAM Address Strobe 1
0076	NVRAM Data Register
0092	System Special Register
0808	Hard-Drive Light Register
080C	Equipment Present Register
0810	TOD NVRAM Protect 1 Register
0812	TOD NVRAM Protect 2 Register
0814	L2 Flush Register
081C	System Control Register
0820	Memory Controller Programming Register
0821	Memory Controller Timing Register
0830	Audio Index Register 1
0831	Audio Index Data Register
0832	Audio Index Register 2
0833	Audio PIO Data Register
0838	IRQ13 Interrupt Request Active Register
083C	RESERVED
0840	Memory Parity Error Status Register
0841	RESERVED
0842	L2-Cache Error Status Register

Table 40 (Page 2 of 2). System Registers	
Port Number	**System Register**
0843	L2-Cache Error Read and Clear Register
0844	Illegal Transfer Error Register
0850	I/O Map Type Register
0852	Planar ID Register
0880	Memory Module 1 and 2 Presence Register
0881	Memory Module 3 and 4 Presence Register
0882	Memory Module 5 and 6 Presence Register

Appendix F. Connector Layout and Pin Assignments

This appendix shows the connector layout and lists their pin assignments for the IBM Personal Computer and ThinkPad Power Series systems.

F.1 Keyboard Connector

Figure 40 shows the layout of the keyboard connector and Table 41 lists the pin assignments for this connector.

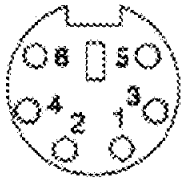

Figure 40. Layout of the Keyboard Connector

Table 41. Keyboard Connector Pin Assignments

Pin	I/O	Signal Name
1	I/O	Data
2	N/A	Reserved
3	N/A	Ground
4	N/A	+ 5 VDC
5	I/O	Clock
6	N/A	Reserved

Note:

The Personal Computer Power Series does not support hot plugging of the keyboard.

© Copyright IBM Corp. 1996

F.2 Mouse Connector

Figure 41 shows the layout of the mouse connector and Table 42 lists the pin assignments for this connector.

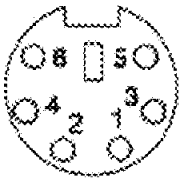

Figure 41. Layout of the Mouse Port

Table 42. Mouse Connector Pin Assignment

Pin	I/O	Signal Name
1	I/O	Data
2	N/A	Reserved
3	N/A	Ground
4	N/A	+ 5 VDC
5	I/O	Clock
6	N/A	Reserved

Note:

The Personal Computer Power Series does not support hot plugging of the mouse.

F.3 Serial Port Connector

Figure 42 on page 171 shows the layout of the serial port connector and Table 43 on page 171 lists the pin assignments for this connector.

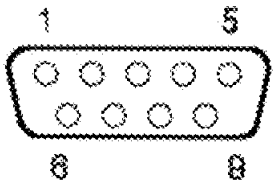

Figure 42. Layout of the Serial Port Connector

Table 43. Serial Port Connector Pin Assignments

Pin No.	Signal Name
1	Data Carrier Detect
2	Receive Data
3	Transmit Data
4	Data Terminal Ready
5	Signal Ground
6	Data Set Ready
7	Request To Send
8	Clear TO Send
9	Ring Indicator

Note:

The Personal Computer Power Series supports serial data up to 115.2 KBaud.

F.4 Parallel Port Connector

Figure 43 on page 172 shows the layout of the parallel port connector and Table 44 on page 172 lists the pin assignments for this connector.

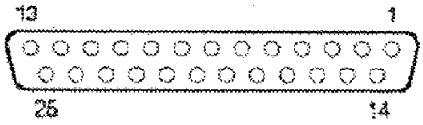

Figure 43. Layout of the Parallel Port Connector

Table 44. Parallel Port Connector Pin Assignments

Pin No.	I/O	Signal Name	Pin No.	I/O	Signal Name
1	Output	-STROBE	14	Output	-AUTO FD XT
2	I/O	Data 0	15	Input	-ERROR
3	I/O	Data 1	16	Output	-SLCT IN
4	I/O	Data 2	16	Output	-INIT
5	I/O	Data 3	18	N/A	Ground
6	I/O	Data 4	19	N/A	Ground
7	I/O	Data 5	20	N/A	Ground
8	I/O	Data 6	21	N/A	Ground
9	I/O	Data 7	22	N/A	Ground
10	Input	-ACK	23	N/A	Ground
11	Input	BUSY	24	N/A	Ground
12	Input	PE	25	N/A	Ground
13	Input	SLCT			

Note:

The Personal Computer Power Series supports the IEEE 1284 parallel port specification.

F.5 Video Connector

Figure 44 shows the layout of the video port connector and Table 45 lists the pin assignments for this connector.

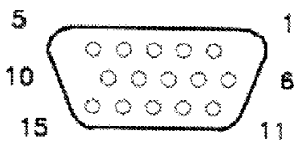

Figure 44. Layout of the Video Port Connector

Table 45. Video Port Connector Pin Assignments

Pin	Signal	Pin	Signal
1	Analog Red	9	<plug>
2	Analog Green or Mono	10	Digital Return
3	Analog Blue	11	Monitor ID 0
4	Monitor ID 2	12	Monitor ID 1
5	Digital Return	13	H-Sync
6	Red Return	14	V-Sync
7	Green Return	15	Monitor ID 3
8	Blue Return		

Note:

The Personal Computer Power Series does not support hot plugging of the video display.

F.6 PCI Connector

Figure 45 on page 174 shows the layout of the PCI connector (only on Personal Computer and ThinkPad Power Series systems) and Table 46 on page 174 lists the pin assignments for this connector.

Figure 45. Layout of the PCI connector

Table 46 (Page 1 of 3). PCI Connector Pin Assignments

Pin	Function	Pin	Function
A1	-TRST	B1	-12 Volt
A2	+12 Volt	B2	TCK
A3	TMS	B3	Ground
A4	TDI	B4	TDO
A5	+5 Volt	B5	+5 Volt
A6	INTA	B6	+5 Volt
A7	INTC	B7	INTB
A8	+5 Volt	B8	INTD
A9	Reserved	B9	-Present 1 [1]
A10	+5 Volt	B10	Reserved
A11	Reserved	B11	-Present 2 [1]
A12	Ground	B12	Ground
A13	Ground	B13	Ground
A14	Reserved	B14	Reserved
A15	-RESET	B15	Ground
A16	+5 Volt	B16	CLK
A17	-GNT	B18	Ground
A18	Ground	B18	-REQ
A19	Reserved	B19	+5 Volt
A20	A/D (3)	B20	A/D (31)
A21	Reserved (+3.3 Volt)	B21	A/D (29)
A22	A/D (28)	B22	Ground

Table 46 (Page 2 of 3). PCI Connector Pin Assignments			
Pin	**Function**	**Pin**	**Function**
A23	A/D (26)	B23	A/D (27)
A24	Ground	B24	A/D (25)
A25	A/D (24)	B25	Reserved (+3.3 Volt)
A26	IDSEL	B26	C/BE# (3)
A27	Reserved (+3.3 Volt)	B27	A/D (23)
A28	A/D (22)	B28	Ground
A29	A/D (20)	B29	A/D (21)
A30	Ground	B30	A/D (19)
A31	A/D (18)	B31	Reserved (+3.3 Volt)
A33	Reserved (+3.3 Volt)	B33	C/BE# (2)
A34	-FRAME	B34	Ground
A35	Ground	B36	-IRDY
A36	-TRDY	B36	Reserved (+3.3 Volt)
A37	Ground	B37	-DEVSEL
A38	-STOP	B38	Ground
A39	Reserved (+3.3 Volt)	B39	-Lock
A40	SDONE	B40	-PERR
A41	-SBO	B41	Reserved (+3.3 Volt)
A42	Ground	B42	-SERR
A43	PAR	B43	Reserved (+3.3 Volt)
A44	A/D (15)	B44	C/BE# (1)
A45	Reserved (+3.3 Volt)	B45	A/D (14)
A46	A/D (13)	B46	Ground
A47	A/D (11)	B47	A/D (12)
A48	Ground	B48	A/D (10)
A49	A/D (9)	B49	Ground
A50	< K e y >	B50	< K e y >
A51	< K e y >	B51	< K e y >
A52	C/BE# (0)	B52	A/D (8)
A53	Reserved (+3.3 Volt)	B53	A/D (7)
A54	A/D (6)	B54	Reserved (+3.3 Volt)

Table 46 (Page 3 of 3). PCI Connector Pin Assignments			
Pin	**Function**	**Pin**	**Function**
A55	A/D (4)	B55	A/D (5)
A56	Ground	B56	A/D (3)
A57	A/D (2)	B57	Ground
A58	A/D (0)	B25	A/D (1)
A59	+ 5 Volt	B59	+ 5 Volt
A60	-REQ64	B60	-ACK64
A61	+ 5 Volt	B61	+ 5 Volt
A62	+ 5 Volt	B62	+ 5 Volt
Note:			
1 B9 and B11 are connected on the riser card.			

F.7 ISA Connector

Figure 46 shows the layout of the ISA connector (only on Personal Computer and ThinkPad Power Series systems) and Table 47 lists the pin assignments for this connector.

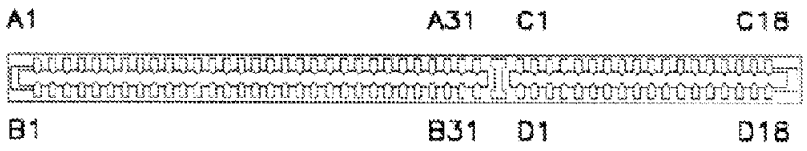

Figure 46. Layout of the ISA Connector

Table 47 (Page 1 of 3). ISA Connector Pin Assignments			
Pin	**Function**	**Pin**	**Function**
A1	-IO CHCK	B1	Ground
A2	SD (7)	B2	RESET
A3	SD (6)	B3	+ 5 Volt

Table 47 (Page 2 of 3). ISA Connector Pin Assignments			
Pin	**Function**	**Pin**	**Function**
A4	SD (5)	B4	IRQ 9
A5	SD (4)	B5	-5 Volt
A6	SD (3)	B6	DRQ 2
A7	SD (2)	B7	-12 Volt
A8	SD (1)	B8	-ZERO WS
A9	SD (0)	B9	+12 Volt
A10	IO CHRDY	B10	Ground
A11	AEN	B11	-SMEMW
A12	SA (12)	B12	-SMEMR
A13	SA (18)	B13	-IOW
A14	SA (17)	B14	-IOR
A15	SA (16)	B15	-DACK 3
A16	SA (15)	B16	DRQ 3
A17	SA (14)	B18	-DACK 1
A18	SA (13)	B18	-DRQ 1
A19	SA (12)	B19	-REFRESH
A20	SA (11)	B20	CLK
A21	SA (10)	B21	IRQ 7
A22	SA (9)	B22	IRQ 6
A23	SA (8)	B23	IRQ 5
A24	SA (7)	B24	IRQ 4
A25	SA (6)	B25	IRQ 3
A26	SA (5)	B26	-DACK 2
A27	SA (4)	B27	T/C
A28	SA (3)	B28	BALE
A29	SA (2)	B29	+5 Volt
A30	SA (1)	B30	Oscillator
A31	SA (0)	B31	Ground
C1	-SBHE	D1	-MEMCS 16
C2	LA (23)	D2	-IO CS16
C3	LA (22)	D3	IRQ 10

Table 47 (Page 3 of 3). ISA Connector Pin Assignments			
Pin	**Function**	**Pin**	**Function**
C4	LA (21)	D4	IRQ 11
C5	LA (20)	D5	IRQ 12
C6	LA (19)	D6	IRQ 15
C7	LA (18)	D7	IRQ 14
C8	LA (17)	D8	-DACK 0
C9	-MEMR	D9	DRQ 0
C10	-MEMW	D10	-DACK 5
C11	SD (8)	D11	DRQ 5
C12	SD (9)	D12	-DACK 6
C13	SD (10)	D13	DRQ 6
C14	SD (11)	D14	-DACK 7
C15	SD (12)	D15	DRQ 7
C16	SD (13)	D16	+ 5 Volt
C17	SD (14)	D17	-MASTER
C18	SD (15)	D18	Ground

Glossary

A

Abstraction Software Layer. Separates the hardware from the software.

Application Binary Interface. Enables applications to run on all available PowerOpen-compliant operating systems no matter from which PowerPC based hardware it runs on.

Application Binary Interface (ABI). An ABI is a set of guidelines describing how binary code should be structured so that applications and code will run unchanged across systems from multiple vendors. Thr ABI is a more specific machine-level API.

Advanced Risc Computing. Refers to the improvements made to original RISC computing (see PowerPC).

Application Programming Interface (API). A library of routines for application programmers.

Asymmetric Multi-Processing. See Multi-Processing.

Asynchronous Exceptions. Exceptions that are caused by external events or other conditions not connected to whatever the CPU is processing at the time that the exception occurred. Contrast with Synchronous Exceptions.

B

Bi-Endian Support. Support in the processor architecture for both big-endian and little-endian byte ordering.

Big-Endian Byte Ordering. A method of storing and accessing multi-byte data types. The data is stored starting with the most significant byte and ending with the least significant.

Block. In the PowerPC architecture, a special memory partition which can be 128KB to 256MB in size. It is specially defined to allow for quick access.

Block Address Translation. The process of translating the logical address of a block into the physical address.

Block Address Translation Registers. The registers that store the locations of blocks in memory. Used in the block address translation process.

Boot Time Abstraction Layer. Collection of firmware and software which abstracts the hardware at boot time.

Branch Look-Ahead. The technique of inspecting the instruction queue to detect branch instructions in the instruction stream. The aim is to execute branch instructions early enough to achieve zero-cycle branching.

C

Cache. A high-speed storage buffer that contains frequently accessed instructions and data; it is used to reduce access time.

Cache Coherency. The situation where multiple cache units sharing one main memory space have an accurate view of the contents of memory.

Cooperative Multitasking. A form of multitasking in which a thread (or application) decides when to stop executing in order to let other threads run.

© Copyright IBM Corp. 1996

CD-ROM. Compact disk read only media is a disc that you can only read data from. Data cannot be written to CD-ROM.

Coprocessor. A microprocessor on an expansion board or planar that extends the address range of the main processor or adds specialized instructions to handle a particular category of operations.

Critical Word First. A cache data transfer policy. When the CPU needs a piece of data that is not in cache, the loading from memory always occurs with the piece of data that the CPU needs first, regardless of its place in the cache block.

Cycles per Instruction. The average number of clock cycles needed to complete executing one instruction.

Cycle Time. The amount of time it takes to complete one CPU cycle.

D

Device. An input/output (I/O) unit such as a terminal, a display, or a printer.

Device Driver. A file that contains the code needed to attach and use a device.

Direct Access Storage Device (DASD). A device in which access time is effectively independent of the location of the data.

Direct Address Translation. The process of using a logical address as the physical address in a memory access. Used when address translation is disabled.

DMA. Direct memory access; technique by which transfers to and from system memory are made by an independent control chip rather than by the system's main processor, thereby resulting in improved overall performance.

DOS. Disk operating system. A program that controls the operation of an IBM Personal Computer, PS/1, PS/2, or PS/ValuePoint and the execution of application programs.

Dynamic Power Management Mode. A mechanism in the PowerPC 603 chip to minimize power consumption during normal operation of the CPU. It does this by detecting any functional unit that is idle and putting this unit in a low-power state.

E

Error Checking and Correction (ECC). In a processing unit, the detection and correction of all single-bit errors, plus the detection of double-bit and some multiple-bit errors.

EPROM. Erasable programmable read-only memory. Programmable read-only memory that is read-only in normal use but can be erased by a special technique and then reprogrammed.

EMS. Expanded memory specification; term used to describe the standard developed by Lotus, Intel and Microsoft for access to expanded memory by real mode DOS application.

Exception. An abnormal or error condition during processing. May be caused by a variety of fatal or non-fatal events. See asynchronous exceptions, synchronous exceptions, precise exceptions and imprecise exceptions.

Extended I/O Controller. This controller control a host of functions including the NVRAM, real-time clock, LED indicators and UMCU

F

FAT. File allocation table; term used to describe the file system implemented by DOS. This file system uses a file allocation table to contain the physical sector addresses of all files on the disk.

First In/First Out (FIFO). A queuing technique in which the next item to be retrieved is the item that has been in the queue for the longest time.

Fixed Disk. A flat, circular, nonremovable plate with a surface layer on which data can be stored by magnetic recording.

FLASH. An electrically erasable programmable read only memory (EEPROM) module that can be updated by diskette

H

Hardware Architecture. Hardware architecture is the logical structure and functional characteristics of a computer including the relationships among its hardware and software.

I

I/O Controller Interface Access. A method of accessing I/O devices from programs. It uses message passing between the CPU and the I/O controller to communicate.

I/O Controller Interface Translation. The process of using a logical address to generate the I/O controller address and the messages used to communicate with an I/O controller. This is the address translation process used for I/O controller interface accesses.

I/O Memory. I/O memory is the area in memory that refers to the addresses where I/O devices reside

Imprecise Exceptions. Exceptions that are usually caused by a very serious failure or non-recoverable condition. They may cause the CPU to halt processing or stop execution of some program. Contrast with precise exceptions.

Intelligent Agent. A part in an application that uses artificial intelligence to enable the computer to understand natural language commands, and responding with complex series of tasks based upon those commands.

Interprocess Communication (IPC). The basic mechanism by which threads running in different tasks can communicate with each other.

Initial Program Load (IPL). (1) The initialization procedure that starts an operating system. (2) The process of loading programs and preparing a system to run jobs.

Interface. A shared boundary between two or more entities. An interface may be a hardware component to link two devices or a portion of storage or registers accessed by two or more computer programs.

International Organization for Standardization (ISO). An organization of national standards bodies from various countries established to promote the development of standards to facilitate international exchange of goods and services, and develop cooperation in intellectual, scientific, technological and economic activity.

Interrupt. A suspension of a process, such as execution of a computer program caused by an external event, and performed in such a way that the process can be resumed.

K

Kernel Programming Interface. Provides the interface to kernel process and device drivers.

Kilobyte (KB). 1024 bytes for processor and data storage (memory) size; otherwise, 1000 bytes.

L

Little-Endian Byte Ordering. A method of storing and accessing multi-byte data types. The data is stored starting with the least significant byte and ending with the most significant.

Liquid Crystal Display (LCD). A display device that creates characters by means of reflected light on patterns formed by a liquid that becomes opaque when it is energized.

Load/Store Architecture. The method of moving data between CPU registers and main memory using specialized load and store instructions and using only register operands in computational instructions.

M

Machine Abstractions. see abstraction software layer

Math Coprocessor. In a personal computer, a microprocessor on an expansion board that supplements the operations of the processor in the system unit, enabling a personal computer to perform complex mathematical operations in parallel with other operations.

Megabyte (MB). 1,048,576 bytes.

MEI Protocol. A simplified version of the MESI protocol (see MESI Protocol). Does not have a shared state.

MESI Protocol. A mechanism to keep track of the state of data in a cache unit. Cache lines can be marked as being in a modified, exclusive, invalid or shared state.

Multi-Processing. Multi-processing is the ability to execute threads on more than one processor concurrently. In symmetric multi-processing, the operating system as well as other processes can have threads executing on multiple processors (as opposed to asymmetric multi-processing, in which the operating system executes only one processor).

N

Native I/O Controller. The native I/O controller is a controller chip that controls the diskette drive, serial port, parallel port and integrated IDE.

O

Operating Environment Architecture. A layer of the PowerPC architecture that defines the memory management and exception models.

Operating System. The software that controls the running of programs. An operating system may provide services such as resource allocation, scheduling, input/output (I/O) control and data management.

Out-of-Order Execution. The situation in a superscalar CPU where instructions are allowed to execute without following the order in which they are coded in the program.

P

Page. A 4 MB partition of a segment. (See Segment)

Path Length. The number of computer instructions needed to perform a task.

Performance Optimization With Enhanced RISC (POWER). IBM′s second-generation RISC architecture. Serves as the underlying processor architecture for IBM′s RISC System/6000 family of products.

PCI bridge and memory controller. This controller consists of two modules that makes a connection between the memory, processor and PCI bus

PCI-ISA bridge controller. A bridge between to the ISA bus is provide by this controller.

Pipelining. A technique where processing of an instruction is divided into several stages and multiple instructions are processed concurrently, with each instruction in different stages of processing (assembly-line style).

Planar. Also known as the motherboard. The largest electronic board in a computer which connects the various subsystems together.

Power-on Self Test (POST). A series of diagnostic tests that are run automatically each time the computer′s power is turned on.

PowerOpen Association. Membership driven organization chartered to manage the evolution of the PowerOpen application binary interface (ABI).

PowerOpen. A company formed by IBM and Apple dedicated to promoting the PowerOpen environment. The PowerOpen environment defines a standard UNIX platform that allows developers to write UNIX-based software that can be ported to any PowerOpen-compliant operating system

PowerPC Reference Platform Specification. A document created by IBM and widely distributed to vendors who wish to offer PowerPC hardware and software. It defines a suggested hardware configuration for PowerPC machines.

PowerPC. A microprocessor based on advanced RISC technology developed by IBM and Motorola (PowerPC = Performance Optimization With Enhanced RISC Performance Chip).

Precise Exceptions. Exceptions where the exact cause is known and the machine state at the time of exception is known. Contrast with imprecise exceptions.

Preemptive Multitasking. A form of multitasking in which the operating system periodically interrupts the execution of a thread in order to let other threads execute. This prevents monopolization of the processor by one thread.

Principle of Locality. The probability that if the CPU fetches a piece of program code from memory, the next piece that it needs is next to or near to the one currently being fetched.

Process. An address space and collection of threads. This can be thought of as an abstraction of a running program. It typically contains the executable, the program′s data, the stack, program counter, stack pointer, and other registers. Essentially this is all of the information needed to run the program. A process is created, managed, and terminated by the operating system. A process is also sometimes referred to as a task, and consists of executable entities called threads. A process can become a parent process by creating other (child) processes which may inherit some or all of the parent process′s resources.

R

Random Access Memory (RAM). A computer′s or adapter′s volatile storage area into which data may be entered or retrieved from in a non-sequential manner.

Reduced Instruction Set Cycles. A processor architecture designed to produce the optimal value of Path Length x Cycles per Instruction.

Run Time Abstraction Layer. Collection of data and software that abstracts hardware from the operating system kernel. The run time abstraction layer is made of system abstraction software and device drivers.

S

Segment. A 256 MB partition of the PowerPC logical address space.

Snooping. A technique to maintain cache coherency (see cache coherency). All cache units watch the system bus. When a cache unit

accesses main memory, all the other cache devices know about the access and can take action to ensure that they maintain a coherent view of memory.

Static Branch Prediction. A scheme that attempts to predict in a conditional branch instruction, whether or not the branch will occur. The prediction that the scheme gives is fixed and does not change with the circumstances.

Subsystem. A secondary or subordinate system, or programming support, usually capable of operating independently of asynchronously with a controlling system.

Superscalar Design. The concept of dispatching and executing multiple instructions in parallel using multiple execution units within a CPU.

Supervisor-Level Programs. Programs that have the authority to perform privileged operations. These privileged operations usually involve using or changing some protected critical system resources. Contrast with User-level Programs.

Symmetric Multi-Processing. See multi-processing.

Synchronous Exceptions. Exceptions that are caused by the instructions that the CPU is processing at a particular moment. Contrast with asynchronous exceptions.

System I/O. The system I/O is the area in the memory map that handles the addressing and communication for all I/O functions

System Memory. The portion of memory where executable instructions reside is called the system memory

System ROM. The system ROM is the are in memory where power-on firmware and boot firmware are stored. It is normally implemented as ROM, EPROM, EEPROM or FLASH ROM.

T

Translation Lookaside Buffer. Fast hardware buffer that contains the most recent logical to physical address mappings.

Thread. The entities which actually execute in a process's address space.

U

UMCU. The universal micro control unit manages basic power functions. It is alive even when power is switched off.

User Instruction Set Architecture. A layer of the PowerPC architecture that defines the user-level programming environment and the programming model for a uniprocessor environment.

User-Level Programs. Programs that execute with normal privileges. These programs do not have the authority to manipulate protected system resources. Contrast with supervisor-level programs.

V

Virtual 8086 Mode. Mode of operation of the Intel 32-bit processors, which allows the processor to execute multiple concurrent tasks with each regarding the processor as its own distinct 8086 processor. This mode of operation provides multitasking and memory protection between the virtual 8086 tasks. Also known as V86 mode.

Virtual Environment Architecture. A layer of the PowerPC architecture that defines the programming model for a multiprocessing environment.

W

WIM Bits. Three bits that define the caching attributes of a page or block.

Write Back. A policy that can be implemented to control the behavior of the cache system. The write back policy states that any modified data need not be reflected in memory immediately. It must be copied out when the cache unit detects that another cache device wants to access the same piece of data in memory.

Write Through. A policy that can be implemented to control the behavior of the cache system. The write through policy states that any cache data that is modified must be copied out to main memory immediately.

Z

Zero-Cycle Branching. The ability to detect and resolve branch instructions early enough to ensure an uninterrupted instruction stream and avoid branch delay.

List of Abbreviations

ABI	Application Binary Interface
AIX	Advanced Interactive eXecutive
ANSI	American National Standards Institute
ARC	Advanced RISC Computing
AT	Advanced Technology
ATM	Asynchronous Transfer Mode
BAT	Block Address Translation
BIOS	Basic Input/Output System
BP	Branch Processor
BTAS	Boot Time Abstraction Layer
CCD	Charge Coupled Device (image sensor)
CD	Compact Disk
CD-ROM	Compact Disk - Read Only Memory
CISC	Complex Instruction Set Computer
CMOS	Complementary Metal Oxide Semiconductor
CODEC	Coder Decoder
CORBA	Common Object Request Broker Architecture
CPU	Central Processing Unit
CR	Condition Register
CRT	Cathode Ray Tube
CU	Completion Unit
DAC	Digital to Analog Converter
DASD	Direct Access Storage Device
dB	Dezibel (one tenth of a Bel)
DDK	Device Driver Development Kit
DIMM	Dual In-Line Memory Module
DMA	Direct Memory Access
D-MMU	Data Memory Management Unit
DOS	Disk Operating System
DPMI	DOS Protected Mode Interface
DRAM	Dynamic Random Access Memory
DSOM	Distributed System Object Model
DSP	Digital Signal Processor
ECC	Error Checking and Correcting
ECP	Extended Capabilities Port
EEPROM	Electrically Erasable & Programmable Read Only Memory
EIA	Electronics Industries Association (USA)
EISA	Extended Industry Standard Architecture
ELF	Executable and Linking Format
EMS	Expanded Memory Specification

© Copyright IBM Corp. 1996

EPA	Environmental Protection Agency (USA, government)
EPROM	Erasable Programmable Read Only Memory (UV light)
ESDI	Enhanced Small Device Interface
FAT	File Alocation Table
FAX	Facsimile
FDD	Floppy Disk Drive
FIFO	First In/First Out
FP	Floating-Point
FPR	Floating-Point Register
FPSCR	Floating-Point Status and Control Register
FPU	Floating-Point Unit
FXU	Fixed-Point Unit
GB	Gigabyte
GPR	General-Purpose Register
GUI	Graphic User Interface
HDD	Hard Disk Drive
HPFS	High Performance File System
Hz	Hertz
IBM	International Business Machines Corporation
IC	Integrated Circuit
ICU	Instruction Cache Unit
IDE	Integrated Device Electronics
IDE	Integrated Development Environment
IEEE	Institute of Electrical and Electronics Engineers
I/O	Input/Output
IML	Initial Microcode Load
I-MMU	Instruction Memory Management Unit
IPL	Initial Program Load
IRQ	Interrupt Request
ISA	Industry Standard Architecture
ISO	International Organization for Standardization
IST	Instruction Set Translator
ITSO	International Technical Support Organization
IU	Instruction Unit
JEDEC	Joint Electron Device Engineering Council
JEIDA	Japan Electronic Industry Development Association
KB	Kilobyte
KBI	Kernel Binary Interface
KHz	Kilohertz
LAN	Local Area Network
LCD	Liquid Crystal Display
LED	Light Emitting Diode
LIM	Lotus Intel Microsoft
LSU	Load/Store Unit
MAS	Macintosh Application Services
MB	Megabyte
MCA	Micro Channel Architecture
MEI	Modified, Exclusive, Invalid
MESI	Modified, Exclusive, Shared, Invalid

MFM	Modified Frequency Modulation
MHz	Megahertz
MIDI	Musical Instrument Digital Interface
MMU	Memory Management Unit
MSR	Machine State Register
MVM	Multiple Virtual Machine
NiCad	Nickel-Cadmium
NiCd	Nickel-Cadmium
NiMH	Nickel Metal Hydride
NTSC	National Television Standards Committee (USA)
NVRAM	Non-Volatile Random Access Memory
OEA	Operating Environment Architecture
OEM	Original Equipment Manufacturer
OS	Operating System
OSF	Open Software Foundation
OS/2	Operating System/2
PAL	Phase-Alternating by Line (TV, Europe)
PC	Personal Computer
PC-DOS	Personal Computer Disk Operating System
PCHE	PC Hardware Environment
PCI	Peripheral Component Interconnect
PCMCIA	Personal Computer Memory Card International Association
POE	PowerOpen Environment
POSIX	Portable Operating System Interface for Computer Environment
POST	Power on Self Test
POWER	Performance Optimized with Enhanced RISC
PowerPC	Performance Optimized with Enhanced RISC Performance Chip
PowerPC SIL	The PowerPC System Information Library
P-P	Peak-to-Peak
PS/2	Personal System/2
PSM	Platform-Specific Module
PTE	Page Table Entry
RAID	Redundant Array of Inexpensive Disks
RAM	Random Access Memory
RAMDAC	Random Access Memory and Digital to Analog Converter
RGB	Red Green Blue
RISC	Reduced Instruction Set Computer
RMS	Root Mean Square
ROM	Read Only Memory
RS/6000	RISC System/6000
RTAS	Run Time Abstraction Layer Software
RTC	Real-Time Clock
SCB	Subsystem Control Block
SCSI	Small Computer System Interface

SECAM	Sequentiel Couleur Avec Memoire (TV, Europe)
SDK	Software Development Kit
SIMM	Single In-Line Memory Module
SOHO	Small Office/Home Office
SMP	Symmetric Multi-Processing
SOM	System Object Model
SPRs	Special Purpose Registers
SR	Segment Register
SRAM	Static Random Access Memory
SRU	System Register Unit
STN	Super Twisted Nematic (portable PC screen technology)
SVGA	Super Video Graphics Array/Adapter
SVR4	Unix System V Release 4
TCP/IP	Transmmission Control Protocol/Internet Protocol
TFT	Thin-Film Transistor
THD	Total Harmonic Distortion
TIA	Telecommunications Industries Association (part of EIA)
TLB	Translation Lookaside Buffer
UISA	User Instruction Set Architecture
UMCU	Universal Micro Control Unit
VCR	Video-Camera Recorder
VEA	Virtual Environment Architecture
VESA	Video Electronics Standards Association
VGA	Video Graphics Array/Adapter
VL-Bus	VESA-Local Bus
VLSI	Very Large Scale Integration
VPD	Vital Product Data
VRAM	Video RAM
XCOFF	eXtended COFF (Common Object File Format)
XMS	eXtended Memory Specification

Index

Numerics

64-bit PowerPC 10
820, ThinkPad 19
850, ThinkPad 21

A

abbreviations 187
ABI 179
Abstraction Layer, Boot Time 179
Abstraction Software Layer 179
acronyms 187
Adapters and Features
  Japanese Systems 160
  US Systems 157
Advanced Risc Computing 179
AIX 15, 18, 36, 39
Application Binary Interface 179
Applications 36
Applications, Demo 39
ARC 36
Architecture, PowerPC 1
Architecture, System 41
Audio specification 34
Audio Support 33, 51
Audio, Business 16, 34, 50, 56
Auxiliary User Input Device Block Diagram 109

B

Basic Processor Model 3
battery pack 55
Bi-Endian Support 179
Binary compatibility 1
Binary Interface, Application 179
Block Diagram of the Personal Computer Power Series Systems 42
Block Diagram of the ThinkPad Power Series 820 System 44
Boards, System 45
Boot Time Abstraction Layer 179
Branch processing unit 8, 9, 10
Branch Unit 4
Bridge, PCI-ISA 49
Bus Architecture 57
Bus Comparison 68
Business Audio 16, 34, 50, 56

C

Cache 53
Cache Subsystem 47
Cache, L2 16
Camera, Video 21
capability, expansion 15
Capture Controller, Video 54
Capture Enhancement, Video 30
Card, PC 31, 32
CD-ROM 96
CD-ROM-4X Drive Standard 16
CD-ROM, definition 180
clock speed 8, 9, 10
Clock, Real-Time 50
Codes, Error 138
Comparison, Bus 68
compatibility, Binary 1
Computing, Advanced Risc 179
Connector
  ISA 176
  Keyboard 169
  Layout of the Keyboard Connector 169
  Mouse 170
  Parallel Port 171
  PCI 173
  Pin Assignment, Mouse 170
  Pin Assignments, Keyboard 169
  Pin Assignments, Serial Port 171
  Pin Assignments, Video Port 173
  Serial Port 170
  Video 173

© Copyright IBM Corp. 1996

Connector Pin Assignments, Parallel Port 172
Controller, Native I/O 50
Controller, Video Capture 54
CS4232 34
Cycle Time 180

D

Demo Applications 39
desktop 13
Details by Model Type, System 133
details, System 19, 22
Details, Technology 16
Diagnostic 138
Diagram, Auxiliary User Input Device Block 109
Digitizer, Video 54
Disk Indicator, Hard Disk 33
Disk Subsystem 79
Diskette Drive Indicator 33
Dispatch 4
Display Specifications, TFT 25
DMA-Channel 166
Drive Indicator, Diskette 33

E

E15 24
E15 Graphics 26
EISA 59
Enhanced IDE Hard File Controller 16
Enhancement, Video Capture 30
Error Codes 138
ESDI 83
Ethernet 16, 49
Execution 4
Expansion 56
expansion capability 15

F

FAST-ATA 85
Features, Adapters 156
features, multi-media 13
Features, PowerPC Processor 10
Fetch, Instruction 4
firmware 110
Fixed-point processing unit 8, 9
Fixed-Point Unit 4, 9
Flash ROM 48
Flash-EEPROM 110
Floating-point processing unit 8, 9, 10
Floating-Point Unit 4
Formats, Video Input 30
FPU 4
FXU 4

G

G10 24
G10 Graphics 24
Graphics Adapter
  GXT150P 27
  H10 29
  S15 28
Graphics, E15 26
Graphics, G10 24
GXT150P 24
GXT150P Graphics Adapter 27

H

H10 Graphics Adapter 29
Hard Disk Indicator 33
Hardfile 15
Headphone 35
Hibernation 118
Host-to-PCI 53

I

I/O Controller, Native 50
IBM Personal Computer and ThinkPad Power Series 13
IBM Personal Computer Power Series 830 and 850 13
IBM ThinkPad Power Series 820 and 850 13
IDE 84
IDE Hard File Controller, Enhanced 16
Indicator
  Diskette Drive 33

Indicator *(continued)*
Hard Disk 33
System Status 31
Input Formats, Video 30
Input/Output 105
Instruction Fetch 4
instruction set, PowerPC 2
integer unit 10
Interface, Application Binary 179
IRQ 165
IRQ Assignments for the IBM Personal Computer Power Series Systems 165
ISA 69
ISA Connector 176
ISA Connector Pin Assignments 176

J

Japanese Systems 160
joystick 34

K

Keyboard Connector 169
Keyboard Connector Pin Assignments 169
Keyboard/Mouse 50

L

L2 Cache 16
Layer, Abstraction Software 179
Layer, Boot Time Abstraction 179
Layers of the PowerPC Architecture 1
Layout
ISA Connector 176
Keyboard Connector 169
Parallel Port Connector 172
Serial Port Connector 171
Video Port Connector 173
LED lights 33
lights, LED 33
Load/store processing unit 9, 10
Load/store unit 9
Local Bus Architecture 60

M

Management Subsystem, Power 118
MCA 59
Memory 15
Memory Subsystem 47, 53, 75
Micro Channel 64
microphone 34, 35
MIDI 34
model, storage 2
Mouse 106
Mouse Connector 170
Mouse Connector Pin Assignment 170
multi-media features 13
multiprocessor 1

N

Native I/O Controller 50
no-pipelining 5
notebook 13
NT, Windows 37
NTSC 30

O

Operating Systems 36

P

pack, battery 55
PAL 30
Parallel Port Connector 171
Parallel Port Connector Pin Assignments 172
Passwords 126
PC Card 31, 32
PC Power Series Overview 23
PCI 59, 62, 69
PCI Bridge/Memory Controller 48
PCI Connector 173
PCI Connector Pin Assignments 174
PCI Connector 174
PCI-ISA 55
PCI-ISA Bridge 49
PCIB/MC 48

PCMCIA 32, 56, 64
PCMCIA-ISA 56
Personal Computer and ThinkPad Power SeriesIBM 13
Personal Computer Power Series 830 and 850, IBM 13
Pin Assignments
  ISA Connector 176
  Keyboard Connector 169
  Mouse Connector 170
  Parallel Port Connector 172
  Serial Port Connector 171
  Video Port Connector 173
Pin Assignments, Serial Port Connector 171
pipelining 5
planar, definition 183
playback 34
Port Connector
  Parallel 171, 172
  Serial 170, 171
  Video 173
Port, Serial 105
Positioning, Product 18, 20, 23
POST 129
POST and Diagnostic Error Codes 139
POWER 1
Power Management Subsystem 118
Power Series 820 and 850, IBM ThinkPad 13
Power Series 830 and 850, IBM Personal Computer 13
Power Series Program Pack 39
Power Series System Architecture 41
Power Specifications 151
Power-on password 126
Power-on: 113
PowerPC
  601 8
  604 9
  620 10
  instruction set 2
  PowerPC Architecture 1
  Processor Family Roadmap 8
  Processor Features 10
  virtual environment 2
PowerPC Reference Platform Specification 41
PowerPC, 64-bit 10
Processor Features, PowerPC 10
Processor Model, Basic 3
Processor Socket, Upgrade 51
Product Positioning 18, 20, 23

R

Real-Time Clock 50
record 34
Registers, System 167
RISC 1
Risc Computing, Advanced 179
Roadmap, PowerPC Processor Family 8
ROM, Flash 48
RS/6000 13
RTC 122

S

S15 Graphics Adapter 28
SCSI 54, 88
Seagate 82
SECAM 30
Security 126
Serial Port 105
Serial Port Connector 170
Serial Port Connector Pin Assignments 171
Setup 129
Socket, Upgrade Processor 51
Software Layer, Abstraction 179
Sound Blaster 50
Sound Blaster Pro 50
speaker 35
specification, Audio 34
Specifications, Power 151
Specifications, TFT Display 25
speed, clock 8
  603 and 603e 9
Status Indicators, System 31
stereo 34
storage model 2
Store 5

Subsystem, Disk 79
Subsystem, Memory 47, 53, 75
Subsystem, Power Management 118
superscalar 6
Supervisor password 126
supervisor-level 3
Support, Audio 33
Support, Video 24
System Architecture 41
System Board 52
System Boards 45
System details 19, 22
System Details by Model Type 133
System Registers 167
System Status Indicators 31
System unit 9
Systems
  Japanese 160
  US 157
Systems, Operating 36

T

Technology Details 16
TFT Display Specifications 25
The IBM Personal Computer Power Series 14
The IBM ThinkPad Power Series 18
ThinkPad 820 19
ThinkPad 850 21
ThinkPad Power Series 820 and 850, IBM 13
TrackPoint 106
TrackPoint-III 22
trademarks xiv

U

uniprocessor 1
Upgrade Processor Socket 51
US Systems 157
Usability 22
User Instruction Set Architecture 184

V

Video Camera 21
Video Capture Controller 54
Video Capture Enhancement 30
Video Connector 173
Video Digitizer 54
Video Input Formats 30
Video Port Connector Pin Assignments 173
Video Support 24
video-conferencing 13
virtual environment, PowerPC 2

W

Weitek 24
Windows NT 37
Windows NT (PowerPC-Edition) 36
Windows NT Workstation 3.51 (PowerPC Edition) 15, 18

X

X bus 69

Printed in U.S.A.

SG24-4592-00